Blue Grass Chemical Agent-Destruction Pilot Plant

Resource Conservation and Recovery Act

Research, Development and Demonstration Permit Application

Submitted To:
The Kentucky Department for Environmental Protection,
Division of Waste Management
14 Reilly Road
Frankfort, Kentucky 40601

Submitted By:
Blue Grass Army Depot
2091 Kingston Highway
Richmond, Kentucky 40475-5001

Prepared By:
Bechtel Parsons Blue Grass
301 Highland Park Drive
Richmond, Kentucky 40475

November 2004
Revision 2

Volume II

VOLUME II

Appendices

A Site Topographic Map

B Wind Rose for BGAD

C Process Flow Diagrams (PFDs) and Material Balances for BGCAPP

D Material Safety Data Sheets (MSDSs)

E (Deleted)

F RD&D Permit Pre-Application Meeting Documentation

Appendix A Contents

Site Topographic Map

Figure

A-1 Site Topographic Map A-1

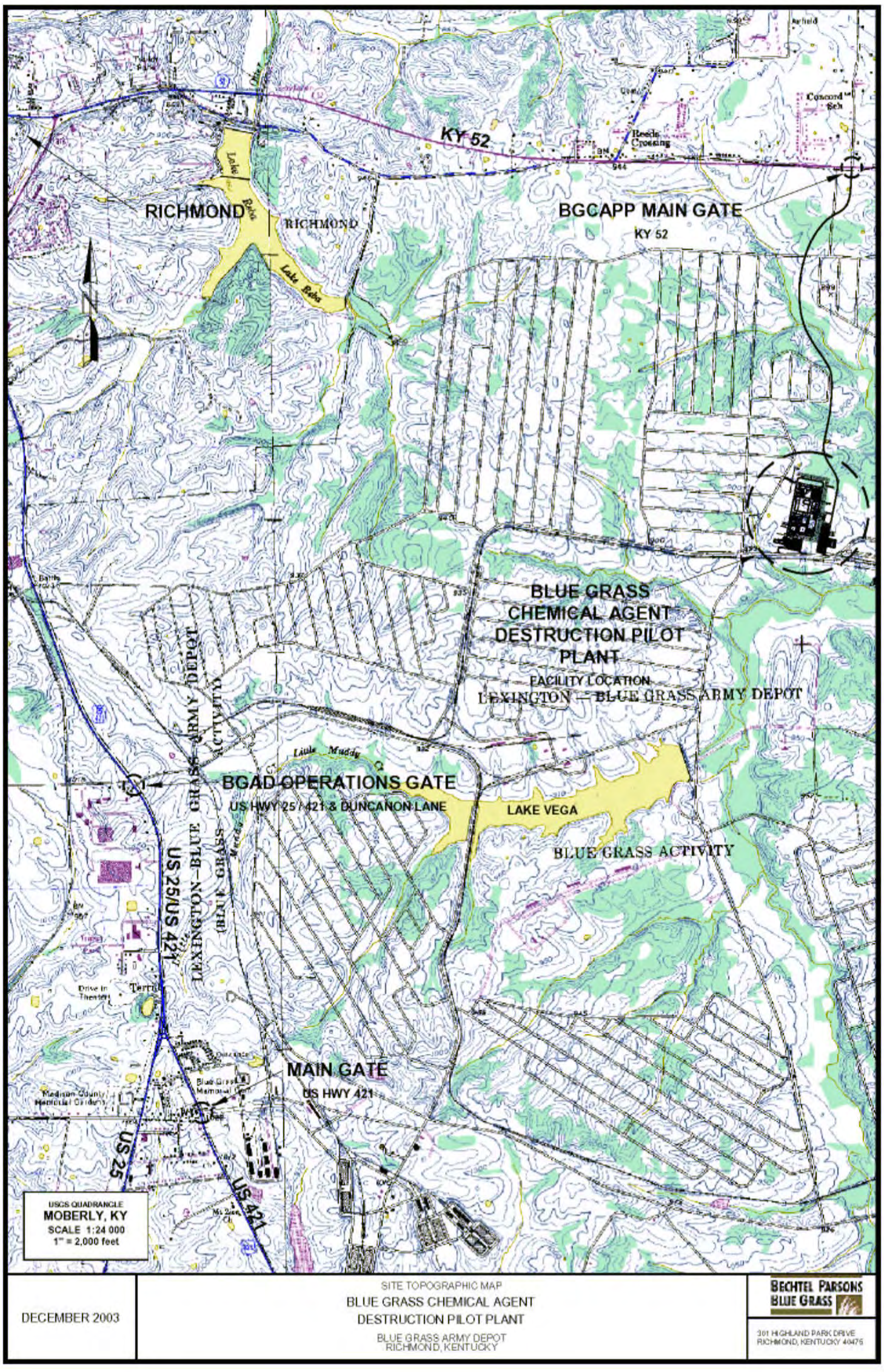

Figure A-1—Site Topographic Map

Appendix B Contents

Five Year Windrose for BGAD

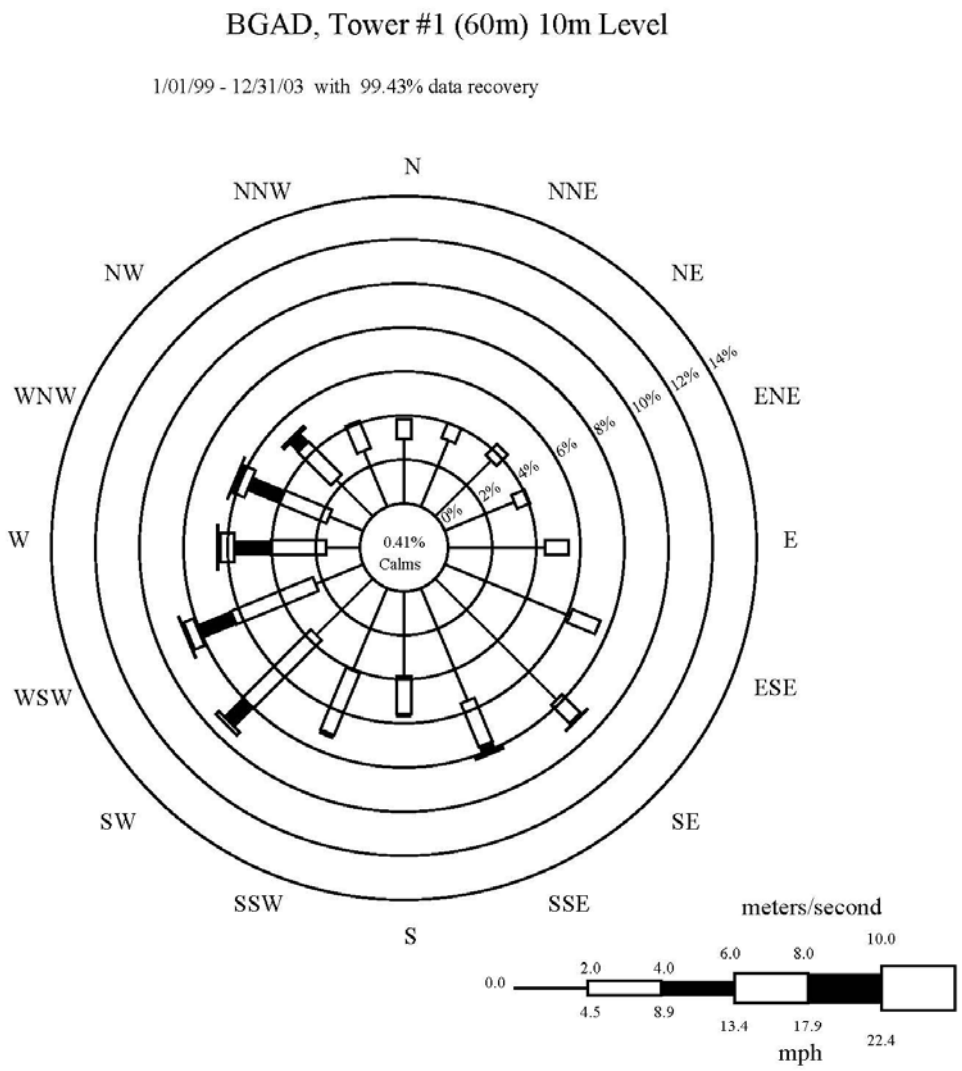
BGAD, Tower #1 (60m) 10m Level
1/01/99 - 12/31/03 with 99.43% data recovery
N
NNE
NE
ENE
E
ESE
SE
SSE
S
SSW
SW
WSW
W
WNW
NW
NNW
0.41%
Calms
2%
4%
6%
8%
10%
12%
14%
meters/second
0.0
2.0
4.0
6.0
8.0
10.0
4.5
8.9
13.4
17.9
22.4
mph

1

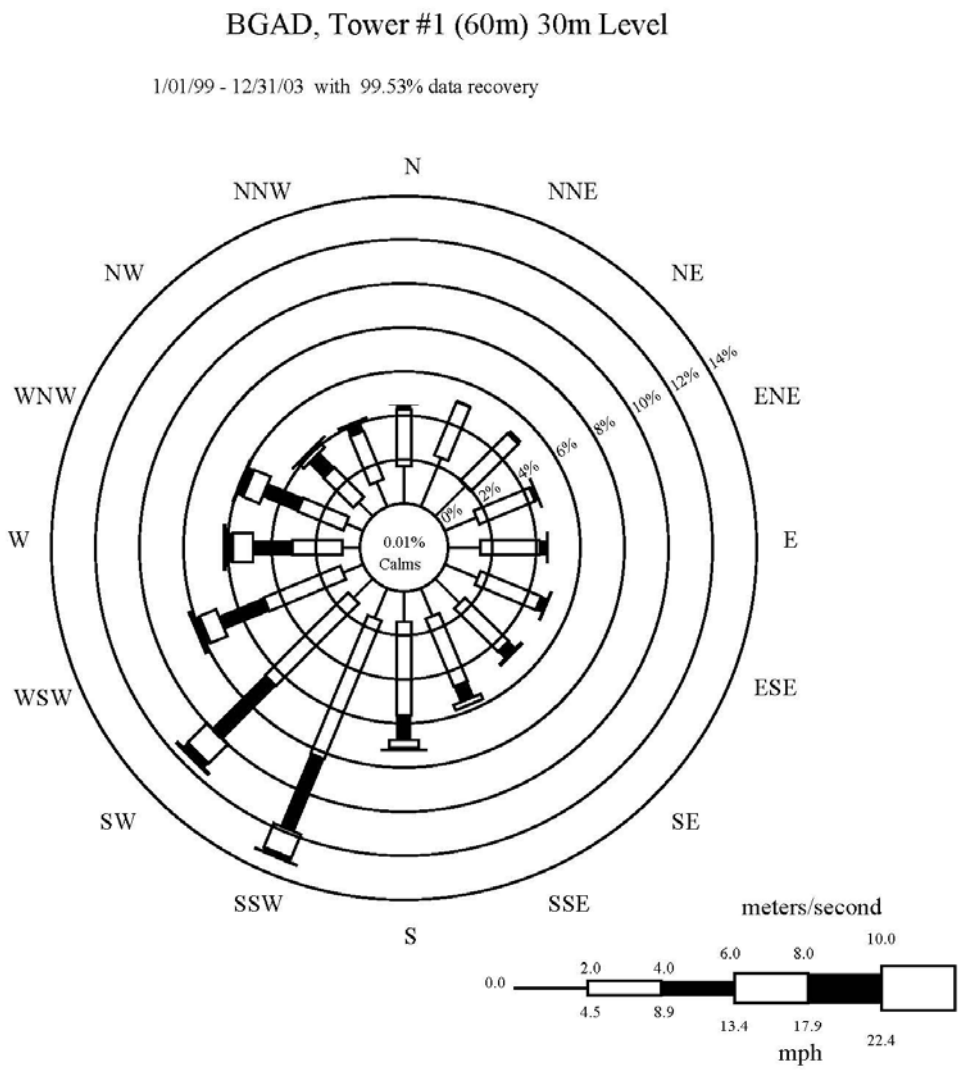
BGAD, Tower #1 (60m) 30m Level
1/01/99 - 12/31/03 with 99.53% data recovery
N
NNE
NE
ENE
E
ESE
SE
SSE
S
SSW
SW
WSW
W
WNW
NW
NNW
0.01%
Calms
2%
4%
6%
8%
10%
12%
14%
meters/second
0.0
2.0
4.0
6.0
8.0
10.0
4.5
8.9
13.4
17.9
22.4
mph

BGAD, Tower #1 (60m) 60m Level

1/01/99 - 12/31/03 with 98.95% data recovery

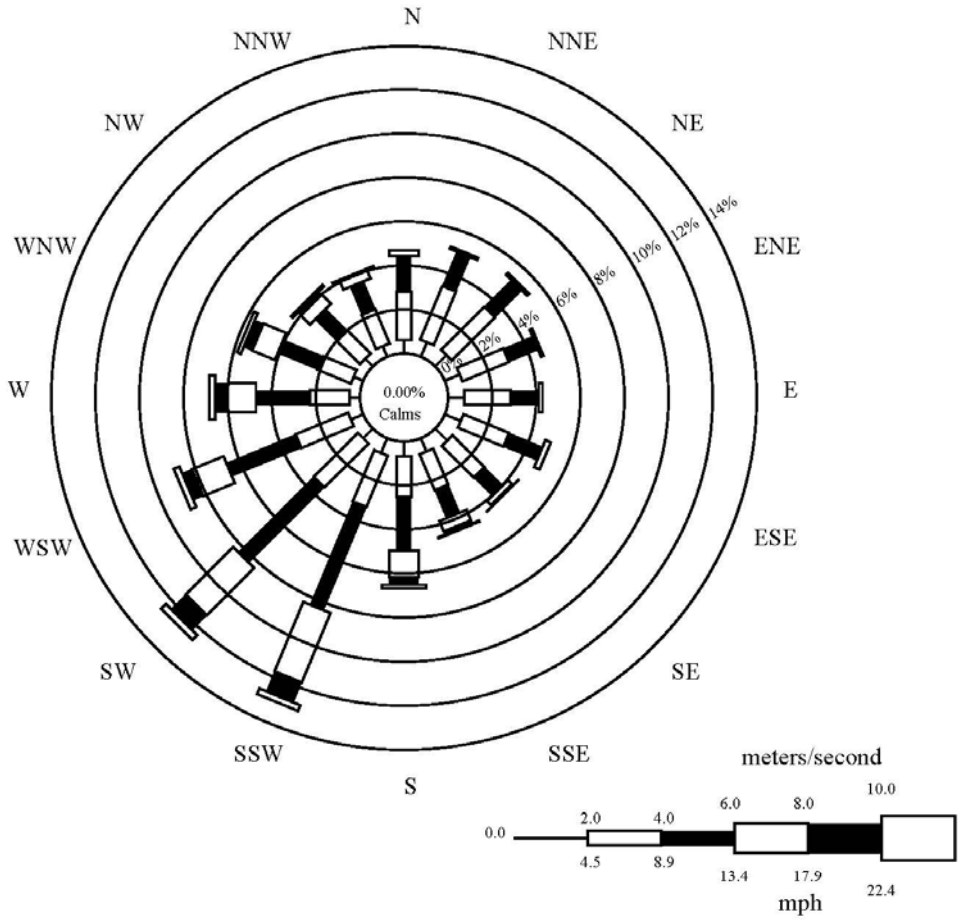

Appendix C Contents

Process Flow Diagrams and Material Balances for BGCAPP

Bases and Assumptions for Material Balances

Assumptions

The attached GB Material Balances are based on the peak processing rate for co-processing:

40 M55 Rockets/hour
15 M426 8 in. Projectiles/hour

Bases

Munition Data	**M426/8 in Projectile**	**M55/115mm Rocket**
Munition Body/Motor Metal 1	Steel	Steel
Munition Metal 1 Wt.	173.2	15.637
Munition Warhead/Fins Metal 2	None	Aluminum
Munition Metal 2 Wt.	0	7.3
Agent Type	**GB**	**GB**
Agent Wt.	14.5	10.75
Burster 1	None	M36
Burster 1 Tube Material (front)	None	Steel
Burster 1 Energetics Material	None	Comp B
Burster 1 Tube Wt.	0	0.1
Burster 1 Energetics Wt.	0	0.64
Burster 2	None	M34
Burster 2 Tube Material (back)	None	Steel
Burster 2 Energetics Material	None	Comp B
Burster 2 Tube Wt.	0	0.25
Burster 2 Energetics Wt.	0	2.5
Fuze Well Cup Material	None	None
Fuze Well Cup Wt.	0	0
Nose Closure Type	Lifting plug	M417 Fuze
Nose Closure Material	Steel	Aluminum
Nose Closure Wt.	1.75	0.6
Nose Closure Energetics	None	12 gm RDX
Propellant	None	M28
Propellant Wt.	0	19.3
Propellant Cellulose Acetate Liner Wt.	0	0.923
Total Munition Weight	189.45	58.00

Bases (cont'd)

Dunnage Estimates	M426/8" Projectile	M55/115mm Rocket
Sub-container	None	S&F Tube
Number in Sub-container	0	1
Sub-container Fiberglass Wt.	0	13.7
Sub-container Aluminum Wt.	0	2.75
Container Designation	Pallet	Pallet
Number of rounds per pallet	6	15
Total Pallet Wt.	51.3	190
Pallet Wood Wt. per round	8.55	12.67
Spent decon	5	lb/round
PPE	0.15	lb/round

Rocket Energetics Composition

Burster			
	Comp B	RDX	60%
		TNT	40%
Propellant			
	M28	Nitrocellulose	60%
		Nitroglycerin	30%
		Triacetin	10%

PFDs and M&EBs For RD&D Permit Application Rev 2

	DOCUMENT NUMBER	SHT	DESCRIPTION
1	24915-00-M5-00-00001	1	GENERAL PROCESS BLOCK FLOW DIAGRAM
2	24915-00-M5-00-00002	1	GENERAL LEGEND AND SYMBOLS PFD
3	24915-07-M5-ACS-00001	1	AGENT COLLECTION TOXIC STORAGE PFD
4	24915-07-M5-ACS-00001	2	AGENT COLLECTION TOXIC STORAGE M&EB
5	24915-07-M5-ACS-00001	3	AGENT COLLECTION TOXIC STORAGE M&EB
6	24915-07-M5-ANS-00001	1	AGENT NEUTRALIZATION PFD
7	24915-07-M5-ANS-00001	2	AGENT NEUTRALIZATION M&EB
8	24915-07-M5-ANS-00001	3	AGENT NEUTRALIZATION M&EB
9	24915-07-M5-ANS-00001	4	AGENT NEUTRALIZATION M&EB
10	24915-07-M5-ANS-00001	5	AGENT NEUTRALIZATION M&EB
11	24915-07-M5-ANS-00001	6	AGENT NEUTRALIZATION M&EB
12	24915-07-M5-DCS-00001	1	DUNNAGE SHREDDING & HANDLING - Carbon PFD
13	24915-07-M5-DCS-00001	2	DUNNAGE SHREDDING & HANDLING - Carbon M&EB
14	24915-07-M5-DPS-00001	1	DUNNAGE SHREDDING & HANDLING - PLASTIC PFD
15	24915-07-M5-DPS-00001	2	DUNNAGE SHREDDING & HANDLING - PLASTIC M&EB
16	24915-07-M5-DPS-00001	3	DUNNAGE SHREDDING & HANDLING - PLASTIC M&EB
17	24915-07-M5-DPS-00001	4	DUNNAGE SHREDDING & HANDLING - PLASTIC M&EB
18	24915-07-M5-DPS-00001	5	DUNNAGE SHREDDING & HANDLING - PLASTIC M&EB
19	24915-07-M5-DPS-00001	6	DUNNAGE SHREDDING & HANDLING - PLASTIC M&EB
20	24915-07-M5-DPS-00001	7	DUNNAGE SHREDDING & HANDLING - PLASTIC M&EB
21	24915-07-M5-DPS-00001	8	DUNNAGE SHREDDING & HANDLING - PLASTIC M&EB
22	24915-07-M5-DPS-00001	9	DUNNAGE SHREDDING & HANDLING - PLASTIC M&EB
23	24915-07-M5-DWS-00001	1	DUNNAGE SHREDDING & HANDLING - WOOD PFD
24	24915-07-M5-DWS-00001	2	DUNNAGE SHREDDING & HANDLING - WOOD M&EB
25	24915-07-M5-DWS-00001	3	DUNNAGE SHREDDING & HANDLING - WOOD M&EB
26	24915-07-M5-DWS-00001	3	DUNNAGE SHREDDING & HANDLING - WOOD M&EB
27	24915-07-M5-DWS-00001	5	DUNNAGE SHREDDING & HANDLING - WOOD M&EB
28	24915-07-M5-DWS-00001	6	DUNNAGE SHREDDING & HANDLING - WOOD M&EB
29	24915-07-M5-DWS-00001	7	DUNNAGE SHREDDING & HANDLING - WOOD M&EB
30	24915-07-M5-DWS-00001	8	DUNNAGE SHREDDING & HANDLING - WOOD M&EB
31	24915-07-M5-DWS-00001	9	DUNNAGE SHREDDING & HANDLING - WOOD M&EB
32	24915-07-M5-EBH-00001	1	ENERGETICS BATCH HYDROLYZER PFD
33	24915-07-M5-EBH-00001	2	ENERGETICS BATCH HYDROLYZER PFD
34	24915-07-M5-EBH-00001	3	ENERGETICS BATCH HYDROLYZER M&EB
35	24915-07-M5-EBH-00001	4	ENERGETICS BATCH HYDROLYZER M&EB
36	24915-07-M5-EBH-00001	5	ENERGETICS BATCH HYDROLYZER M&EB
37	24915-07-M5-EBH-00001	6	ENERGETICS BATCH HYDROLYZER M&EB
38	24915-07-M5-EBH-00001	7	ENERGETICS BATCH HYDROLYZER M&EB
39	24915-07-M5-EBH-00001	8	ENERGETICS BATCH HYDROLYZER M&EB
40	24915-07-M5-EBH-00001	9	ENERGETICS BATCH HYDROLYZER M&EB
41	24915-07-M5-ENS-00001	1	ENERGETICS NEUTRALIZATION PFD
42	24915-07-M5-ENS-00001	2	ENERGETICS NEUTRALIZATION M&EB
43	24915-07-M5-ENS-00001	3	ENERGETICS NEUTRALIZATION M&EB
44	24915-07-M5-ENS-00001	4	ENERGETICS NEUTRALIZATION M&EB
45	24915-07-M5-MPT-00001	1	METAL PARTS TREATMENT PFD
46	24915-07-M5-MPT-00001	2	METAL PARTS TREATMENT M&EB

PFDs and M&EBs For RD&D Permit Application Rev 2

	DOCUMENT NUMBER	SHT	DESCRIPTION
47	24915-07-M5-MPT-00001	3	METAL PARTS TREATMENT M&EB
48	24915-07-M5-MPT-00001	4	METAL PARTS TREATMENT M&EB
49	24915-07-M5-MPTC-00001	1	MPT CONDENSATE SYSTEM PFD
50	24915-07-M5-MPTC-00001	2	MPT CONDENSATE SPENT DECON M&EB
51	24915-07-M5-MWS-00001	1	MUNITIONS WASHOUT SYSTEM PFD
52	24915-07-M5-MWS-00001	2	MUNITIONS WASHOUT SYSTEM M&EB
53	24915-07-M5-MWS-00001	3	MUNITIONS WASHOUT SYSTEM M&EB
54	24915-07-M5-NCR-00001	1	NOSE CLOSURE REMOVAL SYSTEM PFD
55	24915-07-M5-NCR-00001	2	NOSE CLOSURE REMOVAL SYSTEM M&EB
56	24915-07-M5-OTE-00001	1	OFFGAS TREATMENT EBH ENR PFD
57	24915-07-M5-OTE-00001	2	OFFGAS TREATMENT EBH ENR M&EB
58	24915-07-M5-OTE-00001	3	OFFGAS TREATMENT EBH ENR M&EB
59	24915-07-M5-OTE-00001	4	OFFGAS TREATMENT EBH ENR M&EB
60	24915-07-M5-OTM-00001	1	OFFGAS TREATMENT BATCH MPT PFD
61	24915-07-M5-OTM-00001	2	OFFGAS TREATMENT BATCH MPT M&EB
62	24915-07-M5-OTM-00001	3	OFFGAS TREATMENT BATCH MPT M&EB
63	24915-07-M5-OTM-00001	4	OFFGAS TREATMENT BATCH MPT M&EB
64	24915-07-M5-PHS-00001	1	PROJECTILE DEMILITARIZATION PFD
65	24915-07-M5-PHS-00001	2	PROJECTILE DEMILITARIZATION M&EB
66	24915-07-M5-RHS-00001	1	ROCKET SHEAR MACHINE PFD
67	24915-07-M5-RHS-00001	2	ROCKET SHEAR MACHINE M&EB
68	24915-07-M5-SDS-00001	1	SPENT DECONTAMINATION SYSTEM PFD
69	24915-07-M5-SDS-00001	2	SPENT DECONTAMINATION SYSTEM M&EB
70	24915-08-M5-HVAC-00001	1	MDB HVAC FILTERS PFD
71	24915-08-M5-HVAC-00002	1	MDB HVAC FILTERS PFD
72	24915-10-M5-SCWO-00001	1	SCWO - PFD -
73	24915-10-M5-SCWO-00001	2	SCWO - PFD
74	24915-10-M5-SCWO-00001	3	SCWO - M&EB
75	24915-10-M5-SCWO-00001	4	SCWO - M&EB
76	24915-10-M5-SCWO-00001	5	SCWO - M&EB
77	24915-10-M5-SCWO-00001	6	SCWO - M&EB
78	24915-10-M5-SCWO-00001	7	SCWO - M&EB
79	24915-10-M5-SCWO-00001	8	SCWO - M&EB
80	24915-10-HK-TWR-00001	1	Water Recovery R.O. Unit PFD
81	24915-10-HK-TNBE-00001	1	BRP Evaporator Crystalizer PFD
82	24915-10-HK-TNBC-00001	1	BRP Brine Concentrator PFD
83		1	WRS M&EB
84	24915-11-M5-HSS-00001	1	AGENT HYDROLYSATE STORAGE TANKS PFD
85	24915-11-M5-HSS-00001	2	AGENT HYDROLYSATE STORAGE TANKS M&EB
86	24915-11-M5-HSS-00002	1	ENERGETICS HYDROLYSATE STORAGE TANKS PFD
87	24915-11-M5-HSS-00002	2	ENERGETICS HYDROLYSATE STORAGE TANKS M&EB
88	24915-21-M5-AFS-00001	1	ALUMINUM FILTRATION SYSTEM PFD
89	24915-21-M5-AFS-00001	2	ALUMINUM FILTRATION SYSTEM M&EB
90	24915-21-M5-APS-00001	1	ALUMINUM PRECIPITATION PFD
91	24915-21-M5-APS-00001	2	ALUMINUM PRECIPITATION M&EB
92	24915-21-M5-APS-00001	3	ALUMINUM PRECIPITATION M&EB

NOTES:

1. DEMINERALIZED WATER OR RECOVERED WATER IS USED FOR PROCESS CONSUMPTION.

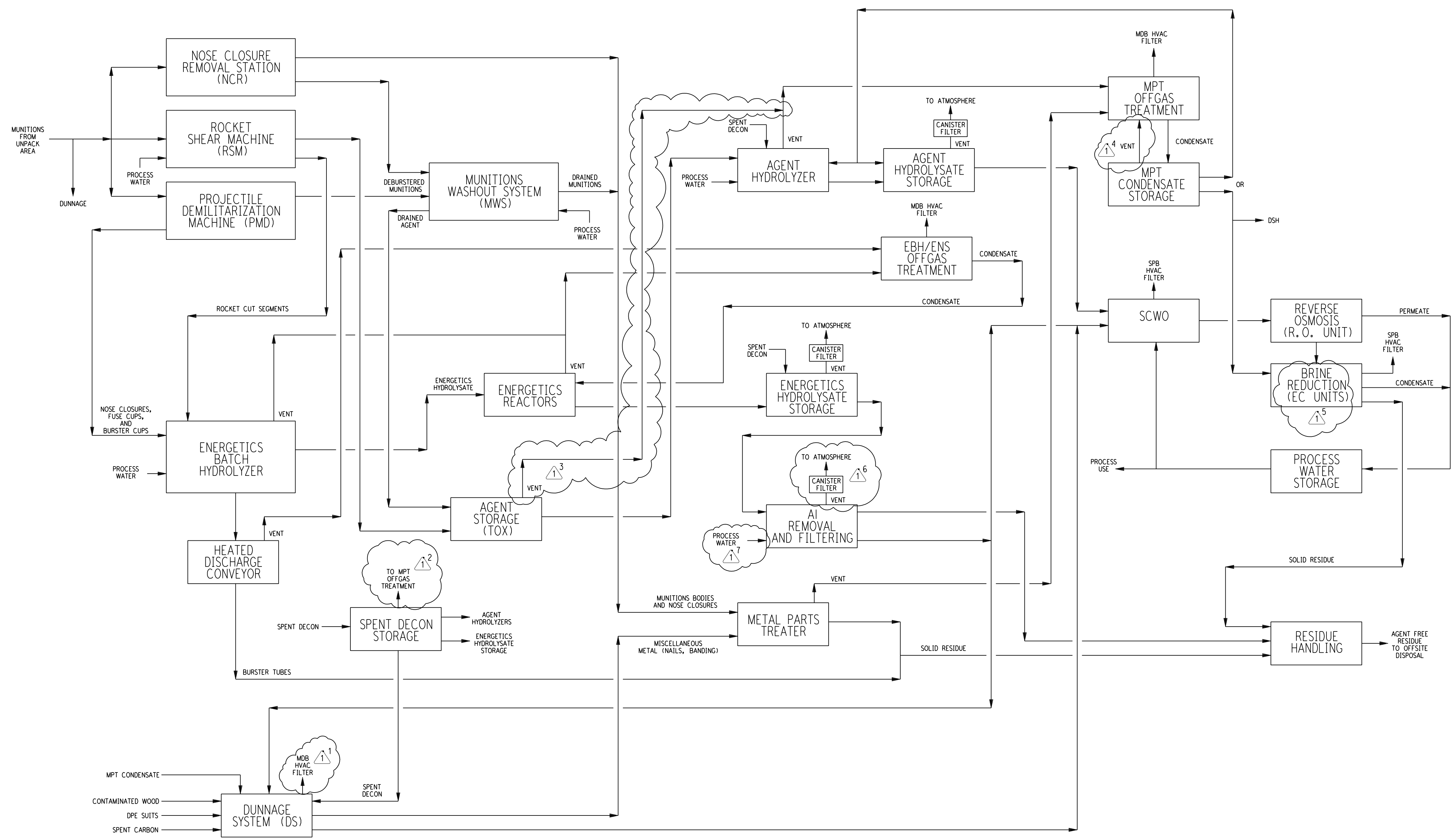

NO.	DATE	DESCRIPTION	DR	CK	DL	PE	APPD
1	11-5-04	ISSUED FOR DESIGN (IFD)	SH	NI	SH	JB	JU
0	7-6-04	ISSUED FOR DESIGN (IFD)	SH	NI	SH	JB	JU

QUALITY ☐ LEVEL 1 ☐ LEVEL 2 ☐ LEVEL 3 ☒ ALL

BECHTEL PARSONS BLUE GRASS
A Joint Venture of Bechtel National, INC. and Parsons Infrastructure & Technology Group Inc.

DOD PROGRAM MANAGER FOR ASSEMBLED CHEMICAL WEAPONS ASSESSMENT EDGEWOOD, MARYLAND

US ARMY ENGINEERING AND SUPPORT CENTER, HUNTSVILLE HUNTSVILLE, ALABAMA

BLUE GRASS CHEMICAL AGENT DESTRUCTION PILOT PLANT PROJECT (BGCAPP)
RICHMOND, KENTUCKY

CONTRACT NO. DAAA09-03-D-0023

GENERAL PROCESS BLOCK FLOW DIAGRAM PROCESS FLOW DIAGRAM

PROFESSIONAL STAMP

DRAWING NUMBER 24915-00-M5-00-00001 SHEET 1 OF 1 REV 1

00-M5-00-1.PFZ BGCAPP_E2.BDR

DESIGN FILE: DGNSPEC$$
PLOTTED BY: USER$ ON DATE$$$$$$$$ AT SYTIME USING COLOR$$$

TYPICAL PFD STANDARD INSTRUMENT SYMBOLS

Symbol	Description
AIC (pH)	pH MONITOR CONTROLLER
AI (pH)	pH MONITOR
AIT (AGENT)	AGENT MONITOR
AI (RH)	RELATIVE HUMIDITY MONITOR
AI (O2)	OXYGEN MONITOR
AI (SOx)	SOx MONITOR
AIC (TOC)	TOTAL ORGANIC CARBON CONTROLLER
AI (TOC)	TOTAL ORGANIC CARBON MONITOR
AI (THC)	TOTAL HYDROCARBON MONITOR
CI	CONDUCTIVITY INDICATOR
DC	DENSITY CONTROLLER
DI	DENSITY INDICATOR
DIC	DENSITY INDICATING CONTROLLER
FI	FLOW INDICATOR
FC	FLOW CONTROL
FFC	FLOW RATIO CONTROLLER
FFIC	FLOW RATIO INDICATING CONTROLLER
FIC	FLOW INDICATING CONTROLLER
FIQ	FLOW INDICATING TOTALIZER
FSLL	FLOW SWITCH LOW LOW
FQC	FLOW QUANTITY CONTROL
LC	LEVEL CONTROL
LG	LEVEL GAUGE
LIC	LEVEL INDICATING CONTROLLER
FQC	FLOW TOTALIZING CONTROLLER
LS	LEVEL SWITCH
PC	PRESSURE CONTROL
PI	PRESSURE INDICATOR
PdI	PRESSURE DIFFERENTIAL INDICATOR
PIC	PRESSURE INDICATING CONTROLLER
QS	FLOW TOTALIZER
S	SAMPLE POINT
SIC	SPEED INDICATING CONTROLLER
TC	TEMPERATURE CONTROL
TI	TEMPERATURE INDICATOR
TIC	TEMPERATURE INDICATING CONTROLLER
TR	TEMPERATURE RECORDER
TS	TEMPERATURE SWITCH

EQUIPMENT CODE:

AGIT - TANK AGITATOR
BLOW - BLOWER
CATX - CATALYTIC OXIDISER
CNVM - CONVEYOR
COMP - COMPRESSOR
CRSH - SHREDDER
EVAP - EVAPORATOR/CRYSTALLIZER
EXCH - HEAT EXCHANGER
FEED - FEEDER
FILT - FILTER
HEAT - HEATER
HOPP - HOPPER
MPT - METAL PARTS TREATER
PUMP - PUMP
RAKE - RAKE
RCTR - REACTOR
SCWO - SUPER CRITICAL WATER OXIDATION UNIT
SEPA - SEPARATOR
SHRD - SHREDDER
STOR - STORAGE BIN
TANK - TANK
TOWR - QUENCH TOWER
PMD - PROJECTILE/MORTAR DISASSEMBLY

ABBREVIATIONS

ACWA - ASSEMBLED CHEMICAL WEAPON ASSESSMENT
AQS - AGENT QUANTIFICATION SYSTEM
BC - BRINE CONCENTRATOR
BFW - BOILER FEEDWATER
BRP - BRINE REDUCTION PACKAGE
CAM - CAVITY ACCESS MACHINE
CATOX - CATALYTIC OXIDISER
CHWR - CHILLED WATER RETURN
CHWS - CHILLED WATER SUPPLY
COND - CONDENSATE
CWR - COOLING WATER RETURN
CWS - COOLING WATER SUPPLY
DECON - DECONTAMINATION
DPE - DEMILITARIZATION PROTECTIVE ENSEMBLE
DSH - DUNNAGE SHREDDING AND HANDLING
EBH - ENERGETICS BATCH REACTOR
EC - EVAPORATOR/CRYSTALLIZER
ECR - EXPLOSIVE CONTAINMENT ROOM
ECV - ECR VESTIBULE
ENS - ENERGETICS NEUTRALIZATION SYSTEM
ENR - ENERGETICS NEUTRALIZATION REACTOR
MDB - MUNITIONS DEMILITARIZATION BUILDING
MMC - MUNITIONS MONITORING CONTAINER
MPT - METAL PARTS TREATER
NNF - NORMALLY NO FLOW
PHS - PROJECTILE HANDLING SYSTEM
RF - RADIO FREQUENCY
SCWO - SUPERCRITICAL WATER OXIDATION
SHT - SECONDARY HEAT TRANSFER FLUID SUPPLY
SHTR - SECONDARY HEAT TRANSFER FLUID RETURN
SS - MATERIAL BALANCE "STEADY STATE ALL SYSTEMS GO" CASE
STM - STEAM
TMA - TOXIC MAINTENANCE AREA
UPA - UNPACK AREA

DRAWING IDENTIFICATION

24915-000-M5-00-00001

- SEQUENCE NUMBER
- LOCATOR CODE
- DOCUMENT TYPE CODE
- FACILITY CODE
- PROJECT NUMBER

EQUIPMENT IDENTIFICATION

XX-XXXX-XXXX

- SEQUENCE NUMBER
- LOCATOR CODE
- EQUIPMENT TYPE CODE

DRAWING NO.	FACILITY	TITLE
24915-000-M5-00-00001	N/A	Process Block Flow Diagram
24915-000-M5-00-00002	N/A	Legend and Symbols
24915-07-M5-ACS-00001	MDB	Agent Collection/Toxic Storage
24915-07-M5-ANS-00001	MDB	Agent Neutralization
24915-07-M5-ANS-00002	MDB	Agent Neutralization Sampling
24915-07-M5-CHP-00001	MDB	Chilled Water System
24915-07-M5-ENS-00001	MDB	Energetics Neutralization
24915-07-M5-ENS-00002	MDB	Energetics Neutralization Sampling
24915-07-M5-MPT-00001	MDB	Metal Parts Treatment
24915-07-M5-MPTC-00001	MDB	MPT Condensate
24915-07-M5-MPTC-00002	MDB	MPT Condensate Sampling
24915-07-M5-MWS-00001	MDB	Munitions Washout System
24915-07-M5-NCR-00001	MDB	Nose Closure Removal System
24915-07-M5-NIT-00001	MDB	Nitrogen Distribution
24915-07-M5-OTE-00001	MDB	Offgas Treatment EBH/ENR
24915-07-M5-OTM-00001	MDB	Offgas Treatment - MPT
24915-07-M5-PHS-00001	MDB	Projectile Demilitarization
24915-07-M5-RHS-00001	MDB	Rocket Shear Machine
24915-07-M5-SDS-00001	MDB	Spent Decontamination System
24915-07-M5-SHT-00001	MDB	Sec. Heat Trans. Fluid Circ. System - Agent
24915-07-M5-SHT-00002	MDB	Sec. Heat Trans. Fluid Circ. System - Energetic
24915-11-M5-HSS-00001	HSA	Agent Hydrolysate
24915-11-M5-HSS-00002	HSA	Energetics Hydrolysate
24915-13-M5-BCS-00001	UB	Bulk Chemical Storage
24915-21-M5-APS-00001	AFB	Aluminum Precipitation

VALVE (NORMALLY OPEN)
VALVE (NORMALLY CLOSED)
BUTTERFLY VALVE
CHECK VALVE
PRESSURE RELIEF VALVE
3-WAY VALVE
CONTROL VALVE
HAND CONTROL VALVE
SLIDE GATE VALVE
PRESSURE REGULATOR (SELF-CONTAINED)
PRESSURE REGULATOR (EXTERNAL TAP)
CONTROL STATION

STREAM NUMBER
PROCESS LINE
EXISTING LINES AND EQUIPMENT
PNEUMATIC INSTRUMENT SIGNAL
ELECTRIC INSTRUMENT SIGNAL
HYDRAULIC SIGNAL
ELECTROMAGNETIC INSTR. SIGNAL
COMPUTER SIGNAL
SLOPE — SLOPE OR "GRAVITY FLOW"
VORTEX BREAKER
HOSE CONNECTION
TRACED LINE (ET=ELECTRIC, ST=STEAM)
STEAM JACKETED LINE
FLEXIBLE HOSE
DWG. NO. — LINE TERMINATION ARROW (USED TO REFERENCE MAIN PROCESS LINES)
ARROW FOR GENERAL USE WITHIN DRAWING
LINE BREAK
LINE TERMINATOR TO OFF SITE

FLAME ARRESTOR
ORIFICE PLATE
EJECTOR OR EDUCTOR
FILTER-AIR INTAKE
PUMP, GENERAL
M — MOTOR DRIVEN RECIPROCATING PUMP
GEAR PUMP OR ROTARY COMPRESSOR/BLOWER
M — PUMP (SUBMERGED)
BLOWER OR FAN
VENT — AIR OPERATED DIAPHRAGM PUMP
M — PROGRESSING CAVITY PUMP
CARBON FILTER
PISTON OR METERING PUMP

SHELL & TUBE EXCHANGER (INDICATING TUBE-SIDE)
STM — STEAM HEATER
CW — WATER COOLER OR CONDENSER
E — ELECTRIC HEATER
AIR COOLER
E — ELECTRIC HEATER
SC — SAMPLE COOLER OR SAMPLE CONNECTION
ROTARY FEEDER
ROTARY PUMP
CLARIFIER

IN-LINE MIXER
BELT CONVEYOR
PRESSURE VESSEL (HORIZONTAL OR VERTICAL)
TANK
M — TANK AGITATOR WITH MOTOR
HOPPER
FILTER PRESS
ROLL OFF BIN OR DUMP TRUCK
PRESSURE FILTER

SHELL JACKETED VESSEL
FLAT TOP TANK
AIR COMPRESSOR
MULTI-MEDIA FILTER

NO.	DATE	DESCRIPTION	DR	CK	DL	PE	APPD
0	6-11-04	ISSUED FOR DESIGN (IFD)	GL	PC	SH	JB	JU

QUALITY ☐ LEVEL 1 ☐ LEVEL 2 ☐ LEVEL 3 ☐ ALL

BECHTEL PARSONS BLUE GRASS
A Joint Venture of Bechtel National, INC. and Parsons Infrastructure & Technology Group Inc.

DOD PROGRAM MANAGER FOR ASSEMBLED CHEMICAL WEAPONS ASSESSMENT EDGEWOOD, MARYLAND

US ARMY ENGINEERING AND SUPPORT CENTER, HUNTSVILLE HUNTSVILLE, ALABAMA

BLUE GRASS CHEMICAL AGENT DESTRUCTION PILOT PLANT PROJECT (BGCAPP)
RICHMOND, KENTUCKY

CONTRACT NO. DAAA09-03-D-0023

GENERAL LEGEND AND SYMBOLS PROCESS FLOW DIAGRAM

PROFESSIONAL STAMP

DRAWING NUMBER 24915-00-M5-00-00002 SHEET 1 OF 1 REV 0

00-M5-00-2.PFZ BGCAPP_E2.BDR

DESIGN FILE: DGNSPEC$$$
PLOTTED BY: USER$ ON DATE$$$$$$$ AT SYTIME USING COLOR$$$
6/16/2004 11:03:47 AM C:\PLOT\QUE\e3-36.qcf Parsons Pasadena \\PASFS03\PLOTS\QUEUES\E36B2\PR0-2A.PRF

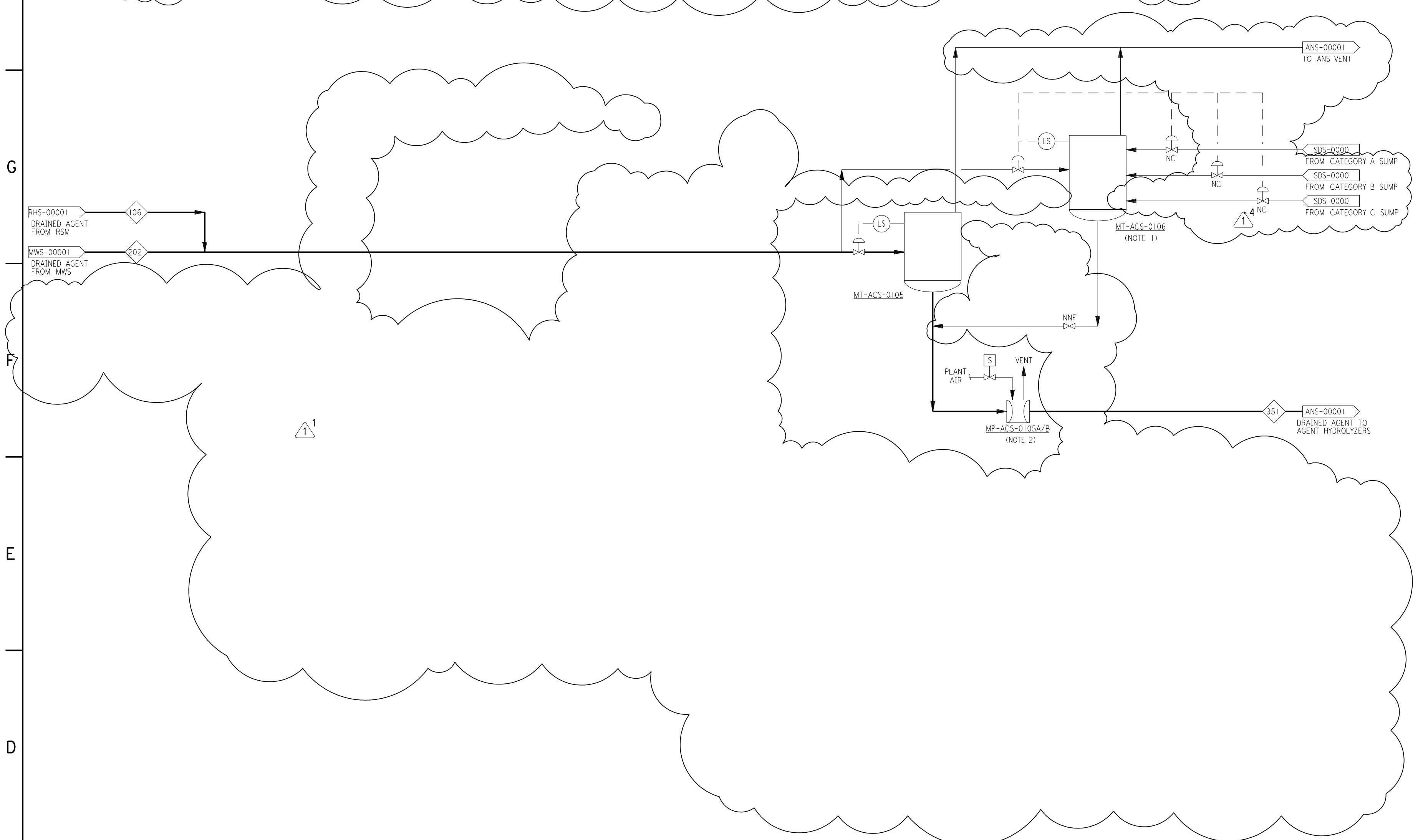

NOTES:

1. FOR AGENT OVERFLOW OR SPILL FROM AGENT HOLDING TANK OR SUMPS. TANK IS NORMALLY EMPTY.
2. DOUBLE DIAPHRAGM FOR LEAKAGE PROTECTION.
3. FOR SYMBOL DEFINITION SEE DRAWING 24915-00-M5-00-00002.
4. DELETED
5. DELETED
6. DELETED

THIS DRAWING SUPERSEDES DRAWING 24915-07-M5-TCAC-00001

NO.	DATE	DESCRIPTION	DR	CK	DL	PE	APPD
1	10-11-04	ISSUED FOR DESIGN (IFD)	EV	PC	SH	JB	JU
0	6-11-04	ISSUED FOR DESIGN (IFD)	EV	PC	SH	JB	JU

QUALITY ☒ LEVEL 1 ☐ LEVEL 2 ☐ LEVEL 3 ☐ ALL

BECHTEL PARSONS BLUE GRASS
A Joint Venture of Bechtel National, INC. and Parsons Infrastructure & Technology Group Inc.

DOD PROGRAM MANAGER FOR ASSEMBLED CHEMICAL WEAPONS ASSESSMENT EDGEWOOD, MARYLAND

US ARMY ENGINEERING AND SUPPORT CENTER, HUNTSVILLE HUNTSVILLE, ALABAMA

BLUE GRASS CHEMICAL AGENT DESTRUCTION PILOT PLANT PROJECT (BGCAPP)
RICHMOND, KENTUCKY

CONTRACT NO. DAAA09-03-D-0023

MUNITIONS DEMILITARIZATION BUILDING AGENT COLLECTION/TOXIC STORAGE PROCESS FLOW DIAGRAM

PROFESSIONAL STAMP

DRAWING NUMBER 24915-07-M5-ACS-00001 | SHEET 1 OF 3 | REV 1

07-M5-ACS-1-1.PFZ BGCAPP_E2.BDR

DESIGN FILE: DGNSPEC$$
PLOTTED BY: USER$ ON DATE$$$$$$$$ AT SYTIME USING COLOR$$

NOTES:

1. AVERAGED FOR 24 HOURS.

2. DELETED

3. DELETED

MATERIAL BALANCE TABLE FOR PFD: 24915-07-M5-ACS-00001
AGENT COLLECTION SYSTEM - CASE AGENT GB CO-PROCESSING
0 WT% AGENT HEEL TO MPT

PEAK CASE

STREAM NUMBER	106	202	351
DESCRIPTION	DRAINED AGENT FROM ROCKET SHEAR MACHINES	DRAINED AGENT FROM MUNITIONS WASH SYSTEM	DRAINED AGENT TO AGENT HYDROLYZERS
TEMPERATURE, °F	77	77	77
PRESSURE, PSIA	55.23	28.23	134.23
MUNITIONS/ HOUR			
INSTANTANEOUS FLOW, GPM/ (ACFM)	5.0	4.0	11.2
DENSITY, LB/FT3	67.97	67.97	67.97
VISCOSITY, cP	1.50	1.50	1.50
MOLECULAR WEIGHT	-	-	-
ENTHALPY, MMBTU/HR	-	-	-
COMPONENT FLOWS, LB/HR			
GB	344.00	174.00	518.00
VX			
H			
WATER			
STEEL			
NITROGEN (VAPOR)			
OXYGEN (VAPOR)			
HYDROGEN (VAPOR)			
CARBON DIOXIDE (VAPOR)			
ETHANE (VAPOR)			
VOCs (VAPOR)			
TOTAL PEAK, LB/HR (Note 1)	344.0	174.0	518.0
AVG THROUGHPUT, LB/HR (Note1)	213.3	126.4	339.7
NOTES			

1

MATERIAL BALANCE TABLE FOR PFD: 24915-07-M5-ACS-00001
AGENT COLLECTION SYSTEM - CASE AGENT GB ROCKETS
0 WT% AGENT HEEL TO MPT

PEAK CASE

STREAM NUMBER	106	202	351
DESCRIPTION	DRAINED AGENT FROM ROCKET SHEAR MACHINES	DRAINED AGENT FROM MUNITIONS WASH SYSTEM	DRAINED AGENT TO AGENT HYDROLYZERS
TEMPERATURE, °F	77		77
PRESSURE, PSIA	55.23		134.23
MUNITIONS/ HOUR			
INSTANTANEOUS FLOW, GPM/ (ACFM)	5.0		11.2
DENSITY, LB/FT3	67.97		67.97
VISCOSITY, cP	1.50		1.50
MOLECULAR WEIGHT	-		-
ENTHALPY, MMBTU/HR	-		-
COMPONENT FLOWS, LB/HR			
GB	344.0		344.0
VX			
H			
WATER			
STEEL			
NITROGEN (VAPOR)			
OXYGEN (VAPOR)			
HYDROGEN (VAPOR)			
CARBON DIOXIDE (VAPOR)			
ETHANE (VAPOR)			
VOCs (VAPOR)			
TOTAL PEAK, LB/HR (Note 1)	344.0	0.0	344.0
AVG THROUGHPUT, LB/HR (Note1)	213.3		213.3
NOTES			

THIS DRAWING SUPERSEDES DRAWING 24915-07-M5-TCAC-00001

NO.	DATE	DESCRIPTION	DR	CK	DL	PE	APPD
1	10-11-04	ISSUED FOR DESIGN (IFD)	EV	PC	SH	JB	JU
0	6-11-04	ISSUED FOR DESIGN (IFD)	EV	PC	SH	JB	JU

QUALITY ☒ LEVEL 1 ☐ LEVEL 2 ☐ LEVEL 3 ☐ ALL

BECHTEL PARSONS BLUE GRASS
A Joint Venture of Bechtel National, INC. and Parsons Infrastructure & Technology Group Inc.

DOD PROGRAM MANAGER FOR ASSEMBLED CHEMICAL WEAPONS ASSESSMENT EDGEWOOD, MARYLAND

US ARMY ENGINEERING AND SUPPORT CENTER, HUNTSVILLE HUNTSVILLE, ALABAMA

BLUE GRASS CHEMICAL AGENT DESTRUCTION PILOT PLANT PROJECT (BGCAPP)
RICHMOND, KENTUCKY

CONTRACT NO. DAAA09-03-D-0023

MUNITIONS DEMILITARIZATION BUILDING AGENT COLLECTION/TOXIC STORAGE PROCESS FLOW DIAGRAM

PROFESSIONAL STAMP

DRAWING NUMBER 24915-07-M5-ACS-00001 SHEET 2 OF 3 REV 1

07-M5-ACS-1-2.PFZ BGCAPP_E2.BDR

DESIGN FILE: DGNSPEC$$
PLOTTED BY: USER$ ON DATE$$$$$$$$ AT SYTIME USING COLOR$$

MATERIAL BALANCE TABLE FOR PFD: 24915-07-M5-ACS-00001
AGENT COLLECTION SYSTEM - CASE AGENT VX CO-PROCESSING
0 WT% AGENT HEEL TO MPT

PEAK CASE

STREAM NUMBER	106	202	351
DESCRIPTION	DRAINED AGENT FROM ROCKET SHEAR MACHINES	DRAINED AGENT FROM MUNITIONS WASH SYSTEM	DRAINED AGENT TO AGENT HYDROLYZERS
TEMPERATURE, °F	77	77	77
PRESSURE, PSIA	55.23	28.23	134.23
MUNITIONS/ HOUR			
INSTANTANEOUS FLOW, GPM/ (ACFM)	5.0	4.0	12.0
DENSITY, LB/FT3	64.69	64.69	64.69
VISCOSITY, cP	10.00	10.00	10.00
MOLECULAR WEIGHT	-	-	-
ENTHALPY, MMBTU/HR	-	-	-
COMPONENT FLOWS, LB/HR			
GB			
VX	465.41	149.76	615.17
H			
WATER			
STEEL			
NITROGEN (VAPOR)			
OXYGEN (VAPOR)			
HYDROGEN (VAPOR)			
CARBON DIOXIDE (VAPOR)			
ETHANE (VAPOR)			
VOCs (VAPOR)			
TOTAL PEAK, LB/HR (Note 1)	465.4	149.8	615.2
AVG THROUGHPUT, LB/HR (Note1)	288.9	109.4	398.4
NOTES			

1

MATERIAL BALANCE TABLE FOR PFD: 24915-07-M5-ACS-00001
AGENT COLLECTION SYSTEM - CASE AGENT VX PROJECTILES
0 WT% AGENT HEEL TO MPT

PEAK CASE

STREAM NUMBER	106	202	351
DESCRIPTION	DRAINED AGENT FROM ROCKET SHEAR MACHINES	DRAINED AGENT FROM MUNITIONS WASH SYSTEM	DRAINED AGENT TO AGENT HYDROLYZERS
TEMPERATURE, °F		77	77
PRESSURE, PSIA		28.23	134.23
MUNITIONS/ HOUR			
INSTANTANEOUS FLOW, GPM/ (ACFM)		4.0	12.0
DENSITY, LB/FT3		64.69	64.69
VISCOSITY, cP		10.00	10.00
MOLECULAR WEIGHT		-	-
ENTHALPY, MMBTU/HR		-	-
COMPONENT FLOWS, LB/HR			
GB			
VX		149.76	149.76
H			
WATER			
STEEL			
NITROGEN (VAPOR)			
OXYGEN (VAPOR)			
HYDROGEN (VAPOR)			
CARBON DIOXIDE (VAPOR)			
ETHANE (VAPOR)			
VOCs (VAPOR)			
TOTAL PEAK, LB/HR (Note 1)	0.0	149.8	149.8
AVG THROUGHPUT, LB/HR (Note1)		109.4	109.4
NOTES			

MATERIAL BALANCE TABLE FOR PFD: 24915-07-M5-ACS-00001
AGENT COLLECTION SYSTEM - CASE AGENT H PROJECTILES
0 WT% AGENT HEEL TO MPT

PEAK CASE

STREAM NUMBER	106	202	351
DESCRIPTION	DRAINED AGENT FROM ROCKET SHEAR MACHINES	DRAINED AGENT FROM MUNITIONS WASH SYSTEM	DRAINED AGENT TO AGENT HYDROLYZERS
TEMPERATURE, °F		77	77
PRESSURE, PSIA		28.23	134.23
MUNITIONS/ HOUR			
INSTANTANEOUS FLOW, GPM/ (ACFM)		4.0	8.2
DENSITY, LB/FT3		80.20	80.20
VISCOSITY, cP		5.80	5.80
MOLECULAR WEIGHT		-	-
ENTHALPY, MMBTU/HR		-	-
COMPONENT FLOWS, LB/HR			
GB			
VX			
H		88.22	88.22
WATER			
STEEL			
NITROGEN (VAPOR)			
OXYGEN (VAPOR)			
HYDROGEN (VAPOR)			
CARBON DIOXIDE (VAPOR)			
ETHANE (VAPOR)			
VOCs (VAPOR)			
TOTAL PEAK, LB/HR (Note 1)	0.0	88.2	88.2
AVG THROUGHPUT, LB/HR (Note1)		58.02	58.02
NOTES			

NOTES:

1. AVERAGED FOR 24 HOURS
2. DELETED
3. DELETED
4. DELETED

1 2

THIS DRAWING SUPERSEDES DRAWING 24915-07-M5-TCAC-00001

NO.	DATE	DESCRIPTION	DR	CK	DL	PE	APPD
1	10-11-04	ISSUED FOR DESIGN (IFD)	EV	PC	SH	JB	JU
0	6-11-04	ISSUED FOR DESIGN (IFD)	EV	PC	SH	JB	JU

QUALITY ☒ LEVEL 1 ☐ LEVEL 2 ☐ LEVEL 3 ☐ ALL

BECHTEL PARSONS BLUE GRASS
A Joint Venture of Bechtel National, INC. and Parsons Infrastructure & Technology Group Inc.

DOD PROGRAM MANAGER FOR ASSEMBLED CHEMICAL WEAPONS ASSESSMENT EDGEWOOD, MARYLAND

US ARMY ENGINEERING AND SUPPORT CENTER, HUNTSVILLE HUNTSVILLE, ALABAMA

BLUE GRASS CHEMICAL AGENT DESTRUCTION PILOT PLANT PROJECT (BGCAPP)
RICHMOND, KENTUCKY

CONTRACT NO. DAAA09-03-D-0023

MUNITIONS DEMILITARIZATION BUILDING AGENT COLLECTION/TOXIC STORAGE PROCESS FLOW DIAGRAM

PROFESSIONAL STAMP

DRAWING NUMBER 24915-07-M5-ACS-00001 SHEET 3 OF 3 REV 1

07-M5-ACS-1-3.PFZ BGCAPP_E2.BDR

MP-ANS-0101A/B
MP-ANS-0201A/B
AGENT HYDROLYZER RECIRCULATION PUMPS AND SPARES
CAPACITY: 410 GPM EA.
(NOTES 1, 4)

ME-ANS-0101/0201
AGENT HYDROLYZER HEAT EXCHANGERS
DUTY: 2.2 MMBTU/HR EA.
(NOTE 1)

MF-ANS-0101/0201
AGENT HYDROLYZER AGITATORS
TBD HP
(NOTES 1, 4)

MV-ANS-0101/0201
AGENT HYDROLYZERS
6'-6" ID X 10'-0" TT
(NOTE 1)

ME-ANS-0102/0202
AGENT HYDROLYZER VENT CONDENSER
DUTY: 0.1 MMBTU/HR EA.
(NOTE 1)

MF-ANS-0103/0203/0303
AGENT HYDROLYSATE SAMPLING TANK AGITATOR
HP TBD
(NOTE 4)

MT-ANS-0103/0203/0303
AGENT HYDROLYSATE SAMPLING TANK
9'-0" ID X 12'-0" TT
(NOTE 10)

MP-ANS-0103/0203/0303/0403
AGENT HYDROLYSATE PUMP & SPARE
CAPACITY: 204 GPM EA.
(NOTE 11)

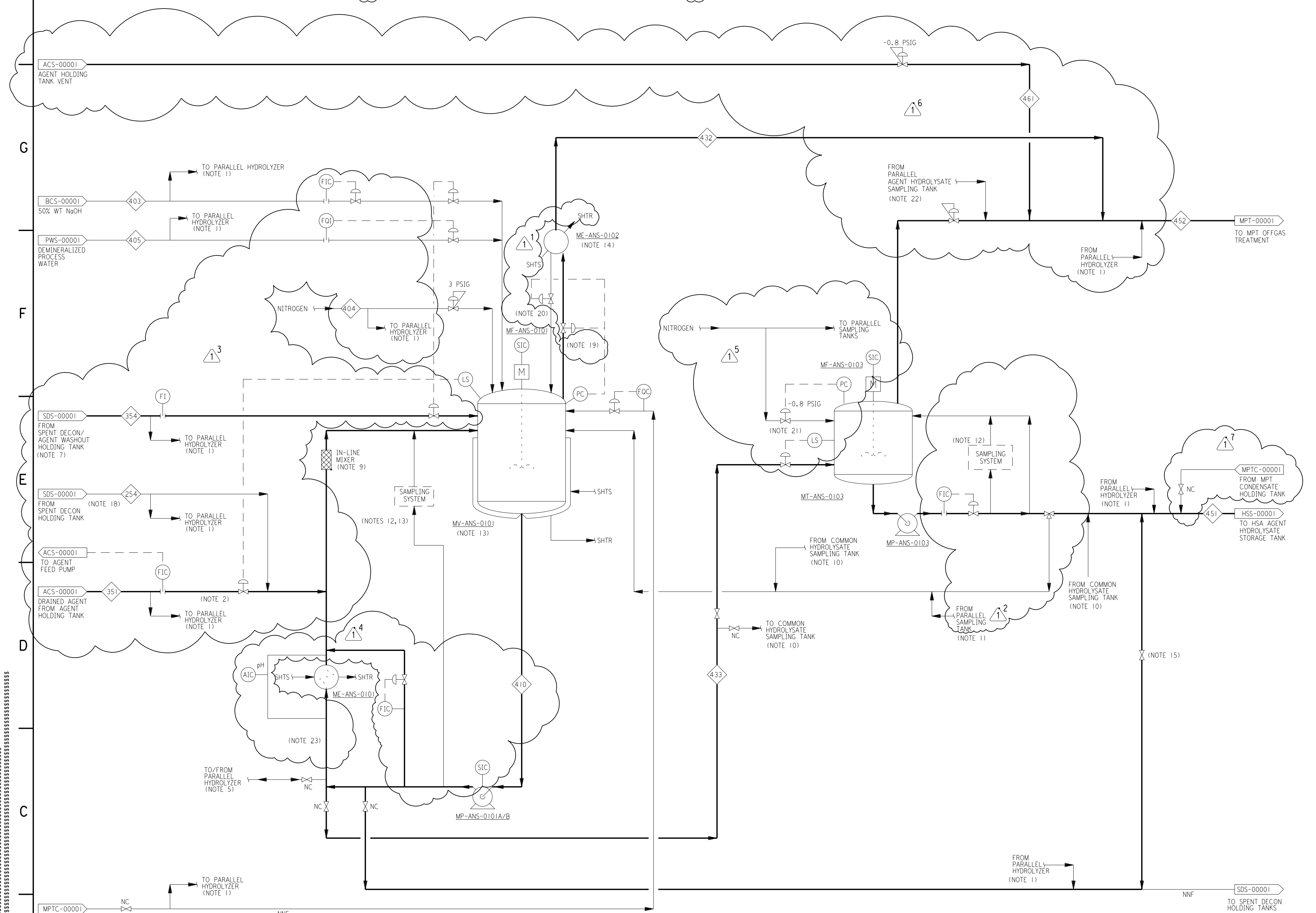

NOTES:

1. THERE ARE A TOTAL OF TWO AGENT HYDROLYZERS AND ANCILLARY EQUIPMENT.
2. DO NOT POCKET.
3. MPT CONDENSATE SUPPLY, IF CONTAMINATED WITH AGENT, WILL DETERMINE THE USAGE OF A HYDROLYZER FOR CONDENSATE SERVICE/DUTY. THIS FEED STREAM OR SERVICE IS NOT TO BE MIXED WITH AGENT.
4. VARIABLE SPEED MOTOR.
5. PROVIDE TRANSFER LINE FROM ONE AGENT HYDROLYZER TO ANOTHER.
6. DELETED
7. THIS STREAM TRANSFERS AGENT WASH WATER DURING NORMAL OPERATION. SPENT DECON SUPPLY, IF CONTAMINATED WITH AGENT, WILL DETERMINE THE USAGE OF A HYDROLYZER FOR SPENT DECON SERVICE/DUTY.
8. FOR SYMBOL DEFINITION SEE DRAWING 24915-00-M5-00-00002.
9. STATIC MIXERS TO BE LOCATED AS CLOSE AS POSSIBLE TO THE REACTORS. THERE ARE TWO PARALLEL STATIC MIXERS, ONE IS USED AS A SPARE.
10. COMMON HYDROLYSATE SAMPLING TANK (MT-ANS-0303) IS CONNECTED TO BOTH HYDROLYZERS.
11. THREE OPERATING PUMPS AND ONE (MP-ANS-0403) AS A COMMON SPARE.
12. SAMPLING SYSTEM IS LOCATED IN THE GLOVE BOX. LOCAL SAMPLE CONNECTION IS ALSO PROVIDED TO BE USED AS AND IF REQUIRED.
13. VX HYDROLYSATE WILL BE SAMPLED IN THE HYDROLYZERS.
14. WASHING SYSTEM TO BE PROVIDED FOR DITHIANE REMOVAL DURING AGENT H OPERATION.
15. THIS LINE IS ALSO USED TO TRANSFER ACCEPTABLE VX HYDROLYSATE TO STORAGE TANK DIRECTLY FROM AGENT HYDROLYZERS
16. GB CO-PROCESSING PEAK IS THE CONTROLLING CASE FOR SIZING PROCESS (DEMINERALIZED) WATER PUMPS AND SAMPLING TANKS H PEAK IS THE CONTROLLING CASE FOR SIZING VENT CONDENSERS. VX PEAK IS THE CONTROLLING CASE FOR SIZING THE REMAINDER OF THE EQUIPMENT IN THE ANS.
17. RECIPE FOR AGENT NEUTRALIZATION:

VX-	16.6% AGENT	17.44% NaOH	65.96% WATER
GB-	7.5% AGENT	11.34% NaOH	81.16% WATER
H -	8.6% AGENT	5.8% NaOH	85.6% WATER

18. WASH WATER WILL BE USED TO FLUSH AGENT LINES AFTER AGENT INJECTION FOR VX CAMPAIGN. FOR GB AND H CAMPAIGNS, SPENT DECON WILL BE USED.
19. PRESSURE SET POINT IS ABOVE NORMAL OPERATING PRESSURE AND BELOW RUPTURE DISC SET POINT.
20. VALVE HAS A TIMED DELAY OPENING TO PREVENT LOSS OF LOOP SEAL.
21. NITROGEN FLOW OF 107 LB/HR IS USED INTERMITTENTLY FOR BLANKETING EACH AGENT HYDROLYSATE SAMPLING TANK.
22. VENT FROM EACH HYDROLYSATE SAMPLING TANK IS 107 LB/HR. THIS STREAM IS NOT VENTED SIMULTANEOUSLY WITH THE AGENT HYDROLYZER VENTS, THEREFORE IT IS NOT INCLUDED IN THE MATERIAL BALANCE.
23. THE MAXIMUM HEAT EXCHANGER INLET FLOW IS 46,001 LB/HR - HEATING CASE OF VX CAMPAIGN. THE HEAT EXCHANGER DUTY IS DETERMINED BY THE COOLING CASE OF VX CAMPAIGN.

THIS DRAWING SUPERSEDES DRAWING 24915-07-M5-TNA-00001

NO.	DATE	DESCRIPTION	DR	CK	DL	PE	APPD
1	10-13-04	ISSUED FOR DESIGN (IFD)	EV	NI	SH	JB	JU
0	6-11-04	ISSUED FOR DESIGN (IFD)	EV	NI	SH	JB	JU

QUALITY ☒ LEVEL 1 ☐ LEVEL 2 ☐ LEVEL 3 ☐ ALL

BECHTEL PARSONS BLUE GRASS
A Joint Venture of Bechtel National, INC. and Parsons Infrastructure & Technology Group Inc.

DOD PROGRAM MANAGER FOR ASSEMBLED CHEMICAL WEAPONS ASSESSMENT EDGEWOOD, MARYLAND

US ARMY ENGINEERING AND SUPPORT CENTER, HUNTSVILLE HUNTSVILLE, ALABAMA

BLUE GRASS CHEMICAL AGENT DESTRUCTION PILOT PLANT PROJECT (BGCAPP)
RICHMOND, KENTUCKY

CONTRACT NO. DAAA09-03-D-0023

MUNITIONS DEMILITARIZATION BUILDING AGENT NEUTRALIZATION PROCESS FLOW DIAGRAM

PROFESSIONAL STAMP

DRAWING NUMBER 24915-07-M5-ANS-00001 | SHEET 1 OF 6 | REV 1

07-M5-ANS-1-1.PFZ BGCAPP_E2.BDR

DESIGN FILE: DGNSPEC$$$$ AT SYTIME USING COLOR$$$$
PLOTTED BY: USER$ ON DATE$$$$$$

S:\2D\pr\07-M5-ANS-1-1.pfz 10/28/2004 04:29:37 PM

MATERIAL BALANCE TABLE FOR PFD: 24915-07-M5-ANS-00001
AGENT NEUTRALIZATION SYSTEM - CASE AGENT GB COPROCESSING (REACTANT RECIPE: 7.5% GB, 11.34% CAUSTIC (50% NaOH), 81.16% H2O)

PEAK CASE

STREAM NUMBER		254	351	354	403	404	405	410	432	433	451	452	461
LINE DESCRIPTION		SPENT DECON FOR FLUSHING AGENT LINES	DRAINED AGENT TO AGENT HYDROLYZERS	AGENT WASH WATER TO AGENT HYDROLYZERS	50% WT NaOH TO AGENT HYDROLYZERS	NITROGEN TO AGENT HYDROLYZERS	DEMINERALIZED WATER TO AGENT HYDROLYZERS	AGENT HYDROLYZER RECIRCULATION	AGENT HYDROLYZER VENT	AGENT HYDROLYSATE FROM ONE AGENT HYDROLYZER	TOTAL AGENT HYDROLYSATE TRANSFER	TOTAL VENT TO OTM	VENT FROM AGENT HOLDING TANK
TEMPERATURE	°F	77	77	90	77	77	77	100	75	100	100	75	77
PRESSURE	PSIA	34.23	124.23	34.23	34.23	79.23	34.23	34.23	14.00	34.23	34.23	14.00	14.00
INSTANTANEOUS FLOW - VOLUME	GPM (ACFM)	20.0	11.2	130.7	30.4	(6.3)	100.4	410.0	(9.9)	204.2	204.2	(21.1)	(1.2)
DENSITY	LB/FT3	61.99	67.97	62.50	94.80	0.386	61.99	63.25	0.068	63.25	63.25	0.068	0.070
VISCOSITY	cP	0.89	1.50	0.96	53.00	0.018	0.89	0.74	0.017	0.74	0.74	0.017	0.018
MOLECULAR WEIGHT (GAS)						28.01			29.39			29.39	28.01
ENTHALPY (Note 8)	MM BTU /HR	-8.89E-01	-9.61E-01	-18.27	-5.74	-7.76E-12	-29.73		-3.65E-03	-28.26	-56.52	-7.26E-03	2.72E-05
Liquid Solution (including suspended solids and dissolved gases)													
AGENT (GB)	LB/HR		481.7	120.4									
HCl	LB/HR		5.2E-01	1.3E-01									
HF	LB/HR												
Nitrogen	LB/HR							5.8		1.2E-01	2.4E-01		
Diisopropylcarbodiimide (DICDI-stabilizer)	LB/HR		20.7	5.2									
Tributhyamine (TBA)	LB/HR		10.1	2.5				304.3		6.3	12.6		
Methyldifluoride	LB/HR		2.6	6.5E-01				46.1		1.0	1.9		
Fluoromethane(MF)	LB/HR		1.0	2.6E-01				12.5		2.6E-01	5.2E-01		
1,3-Diisopropylurea (DIPU)	LB/HR							713.2		14.8	29.6		
"GB"-Pyro-Na (Na-salt of isopropyl methylphosphonic	LB/HR							16,581.3		344.0	688.1		
MPA-Na2 (Na-salt of methylphosphonic acid)	LB/HR												
IPA (Isopropyl alcohol)	LB/HR												
Sodium fluoride	LB/HR							4,349.1		90.2	180.5		
Sodium chloride	LB/HR							25.0		5.2E-01	1.0		
	LB/HR												
NaOH	LB/HR				489.6			3,495.2		72.5	145.0		
Water	LB/HR	126.5		2648.0	489.6		4232.1	182,429.0		3785.1	7570.3		
Aluminum	LB/HR		1.0	2.6E-01				31.2		6.5E-01	1.3		
Nickel	LB/HR		2.6E-01	6.5E-02				7.9		1.6E-01	3.3E-01		
Copper	LB/HR		1.3E-02	3.2E-03				3.9E-01		8.2E-03	1.6E-02		
Iron	LB/HR		2.1E-03	5.2E-04				6.3E-02		1.3E-03	2.6E-03		
Vapor													
Diisopropylamine (DIPU)	LB/HR								1.2E-04			2.4E-04	
Tributhyamine (TBA)	LB/HR								1.2E-04			2.4E-04	
Methyldifluoride	LB/HR								6.6E-01			1.3	
Fluoromethane(MF)	LB/HR								3.9E-01			7.8E-01	
Water	LB/HR								5.0E-03			1.0E-02	
Nitrogen	LB/HR					9.2			4.5			13.7	4.8
IPA (Isopropyl alcohol)	LB/HR												
TOTAL PEAK FLOW (Notes 2,8)	LB/HR	126.5	518.0	2777.5	979.2	9.2	4232.1		5.5	4315.7	8631.5	15.8	4.8
TOTAL AVERAGE FLOW (Notes 2,8)	LB/HR	83.0	339.7	1849.2	642.2	6.0	2748.0		2.0	2828.8	5657.7	10.4	3.1
NOTES						4		1	3			6	

NOTES:

1. THIS STREAM SHOWS ONLY THE INSTANTANEOUS COMPONENT FLOWS DURING COOLING.
2. THE PEAK CASE IS BASED ON MAXIMUM AGENT DRAIN RATE OF 15,540 lb/day. THE AVERAGE CASE IS BASED ON AGENT DRAIN RATE OF 10,192 lb/day.
3. VENTING RATE BASED ON REACTOR FILLING RATE PLUS THE NITROGEN SWEEP.
4. NITROGEN SUPPLY RATE BASED ON REACTOR EMPTYING RATE.
5. DELETED
6. VENT FROM EACH HYDROLYSATE SAMPLING TANK IS 107 LB/HR. THIS STREAM IS NOT VENTED SIMULTANEOUSLY WITH THE AGENT HYDROLYZER AND THUS IS NOT INCLUDED IN THE MATERIAL BALANCE.
7. TOTAL NUMBER OF BATCHES IS APPROXIMATELY BASED ON 2,040 GAL/UNIT.
8. AVERAGED FOR 24 HOURS.
9. BATCH STEPS FOR NEUTRALIZATION:

STEP	MIN.	PHASE ACTION
1	20	Charge reactor with demineralized water
2	10	Feed caustic to reactor with vent opened
3	30	Agitation, recirc., sweep with N2 (15 min) at 3psig, & heat up to 194F
4	10	Charge reactor with agent wash water
5	20	Feed agent to recirc. loop
6	3	Flushing agent lines
7	45	Recirc. & Maintain at 194F
8	20	Cooling down to 100F.
9	10	Pump out to agent hydrolysate sampling tank
TOTAL	168	

10. DELETED

THIS DREAWING SUPERSEDES DRAWING 24915-07-M5-TNA-00001

NO.	DATE	DESCRIPTION	DR	CK	DL	PE	APPD
1	10-26-04	ISSUED FOR DESIGN (IFD)	EV	NI	SH	JB	JU
0	6-11-04	ISSUED FOR DESIGN (IFD)	EV	NI	SH	JB	JU

QUALITY ☒ LEVEL 1 ☐ LEVEL 2 ☐ LEVEL 3 ☐ ALL

BECHTEL PARSONS BLUE GRASS
a joint venture of Bechtel National, Inc. and Parsons Infrastructure & Technology Group, Inc.

DOD PROGRAM MANAGER FOR ASSEMBLED CHEMICAL WEAPONS ASSESSMENT EDGEWOOD, MARYLAND

US ARMY ENGINEERING AND SUPPORT CENTER, HUNTSVILLE HUNTSVILLE, ALABAMA

BLUE GRASS CHEMICAL AGENT DESTRUCTION PILOT PLANT PROJECT (BGCAPP)
RICHMOND, KENTUCKY

CONTRACT NO. DAAA09-03-D-0023

MUNITIONS DEMILITARIZATION BUILDING
AGENT NEUTRALIZATION
PROCESS FLOW DIAGRAM

DRAWING NUMBER 24915-07-M5-ANS-00001 | SHEET 2 OF 6 | REV 1

PROFESSIONAL STAMP

DESIGN FILE: DGN\PFD\24915-07-M5-ANS-00001.DGN
PLOTTED BY: USER ON DATE: AT STIME USING COLOR: BGCAPP_E2.BDR

07-M5-ANS-1-2.PFZ

MATERIAL BALANCE TABLE FOR PFD: 24915-07-M5-ANS-00001
AGENT NEUTRALIZATION SYSTEM - CASE AGENT GB ROCKETS (REACTANT RECIPE: 7.5% GB, 11.34% CAUSTIC (50% NaOH), 81.16% H2O)

PEAK CASE

STREAM NUMBER		254	351	354	403	404	405	410	432	433	451	452	461
LINE DESCRIPTION		SPENT DECON FOR FLUSHING AGENT LINES	DRAINED AGENT TO AGENT HYDROLYZERS	AGENT WASH WATER TO AGENT HYDROLYZERS	50% WT NaOH TO AGENT HYDROLYZERS	NITROGEN TO AGENT HYDROLYZERS	DEMINERALIZED WATER TO AGENT HYDROLYZERS	AGENT HYDROLYZER RECIRCULATION	AGENT HYDROLYZER VENT	AGENT HYDROLYSATE FROM ONE AGENT HYDROLYZER	TOTAL AGENT HYDROLYSATE TRANSFER	TOTAL VENT TO OTM	VENT FROM AGENT HOLDING TANK
TEMPERATURE	°F	77	77	77	77	77	77	100	75	100	100	75	77
PRESSURE	PSIA	34.23	124.23	34.23	34.23	79.23	34.23	34.23	14.00	34.23	34.23	14.00	14.00
INSTANTANEOUS FLOW - VOLUME	GPM (ACFM)	20.0	11.4	113.9	30.8	(6.6)	111.1	410.0	(10.4)	203.4	203.4	(22.0)	(1.2)
DENSITY	LB/FT3	61.99	67.97	62.50	94.80	0.386	61.99	63.25	0.069	63.25	63.25	0.069	0.070
VISCOSITY	cP	0.89	1.50	0.96	53.00	0.018	0.89	0.74	0.017	0.74	0.74	0.017	0.018
MOLECULAR WEIGHT (GAS)						28.01			29.21			29.21	28.01
ENTHALPY (Note 8)	MM BTU /HR	-5.81E-01	-6.38E-01	-10.39	-3.81	-5.34E-12	-21.51		-2.47E-03	-18.77	-37.54	-4.95E-03	-3.97E-12
Liquid Solution (including suspended solids)													
AGENT (GB)	LB/HR		319.9	80.0									
HCl	LB/HR		3.4E-01	8.6E-02									
HF	LB/HR												
Nitrogen	LB/HR							5.8		8.0E-02	1.6E-01		
Diisopropylcarbodiimide (DICDI-stabilizer)	LB/HR		13.8	3.4									
Tributhyamine (TBA)	LB/HR		6.7	1.7				304.3		4.2	8.4		
Methyldifluoride	LB/HR		1.7	4.3E-01				45.5		0.6	1.3		
Fluoromethane (MF)	LB/HR		6.9E-01	1.7E-01				12.2		1.7E-01	3.4E-01		
1,3-Diisopropylurea (DIPU)	LB/HR							713.2		9.8	19.7		
"GB"-Pyro-Na (Na-salt of isopropyl methylphosphonic acid)	LB/HR							16,581.4		228.5	456.9		
MPA-Na2 (Na-salt of methylphosphonic acid)	LB/HR												
IPA (Isopropyl alcohol)	LB/HR												
Sodium fluoride	LB/HR							4,349.1		59.9	119.9		
Sodium chloride	LB/HR							25.0		3.4E-01	6.9E-01		
	LB/HR												
NaOH	LB/HR				325.1			3,495.2		48.2	96.3		
Water	LB/HR	82.9		1500.1	325.1		3070.1	182,429.8		2513.7	5027.4		
Aluminum	LB/HR		6.9E-01	1.7E-01				31.1		4.3E-01	8.6E-01		
Nickel	LB/HR		1.7E-01	4.3E-02				7.9		1.1E-01	2.2E-01		
Copper	LB/HR		8.6E-03	2.1E-03				3.9E-01		5.4E-03	1.1E-02		
Iron	LB/HR		1.4E-03	3.4E-04				6.3E-02		8.7E-04	1.7E-03		
Vapor													
Diisopropylamine (DIPU)	LB/HR								8.3E-05			1.7E-04	
Tributhyamine (TBA)	LB/HR								8.3E-05			1.7E-04	
Methyldifluoride	LB/HR								4.5E-01			9.0E-01	
Fluoromethane (MF)	LB/HR								2.6E-01			5.2E-01	
Water	LB/HR								3.4E-03			6.9E-03	
Nitrogen	LB/HR					6.3			3.1			10.9	4.8
IPA (Isopropyl alcohol)	LB/HR												
TOTAL PEAK FLOW (Notes 2,8)	LB/HR	82.9	344.0	1586.1	650.3	6.3	3070.1		3.8	2866.0	5732.1	12.3	4.8
TOTAL AVERAGE FLOW (Notes 2,8)	LB/HR	51.4	213.3	983.4	403.2	3.9	1903.5		2.4	1775.5	3551.0	7.6	2.9
NOTES						4		1	3			6	

NOTES:

1. THIS STREAM SHOWS ONLY THE INSTANTANEOUS COMPONENT FLOWS DURING COOLING.
2. THE PEAK CASE IS BASED ON MAXIMUM AGENT DRAIN RATE OF 10,320 lb/day. THE AVERAGE CASE IS BASED ON AGENT DRAIN RATE OF 6398 lb/day.
3. VENTING RATE BASED ON REACTOR FILLING RATE PLUS THE NITROGEN SWEEP.
4. NITROGEN SUPPLY RATE BASED ON REACTOR EMPTYING RATE.
5. DELETED
6. VENT FROM EACH HYDROLYSATE SAMPLING TANK IS 107 LB/HR. THIS STREAM IS NOT VENTED SIMULTANEOUSLY WITH THE AGENT HYDROLYZER AND THUS IS NOT INCLUDED IN THE MATERIAL BALANCE.
7. TOTAL NUMBER OF BATCHES IS APPROXIMATELY BASED ON 2,040 GAL/UNIT.
8. AVERAGED FOR 24 HOURS.
9. BATCH STEPS FOR NEUTRALIZATION:

STEP	MIN.	PHASE ACTION
1	20	Charge reactor with demineralized water
2	10	Feed caustic to reactor with vent opened
3	30	Agitation, recirc., sweep with N2 (15 min) at 3psig, & heat up to 194F
4	10	Charge reactor with agent wash water
5	20	Feed agent to recirc. loop
6	3	Flushing agent lines
7	45	Recirc. & Maintain at 194F
8	20	Cooling down to 100F.
9	10	Pump out to agent hydrolysate sampling tank
TOTAL	168	

10. DELETED

THIS DREAWING SUPERSEDES DRAWING 24915-07-M5-TNA-00001

NO.	DATE	DESCRIPTION	DR	CK	DL	PE	APPD
1	10-26-04	ISSUED FOR DESIGN (IFD)	EV	NI	SH	JB	JU
0	6-11-04	ISSUED FOR DESIGN (IFD)	EV	NI	SH	JB	JU

QUALITY ☒ LEVEL 1 ☐ LEVEL 2 ☐ LEVEL 3 ☐ ALL

BECHTEL PARSONS BLUE GRASS
A Joint Venture of Bechtel National, INC. and Parsons Infrastructure & Technology Group Inc.

DOD PROGRAM MANAGER FOR ASSEMBLED CHEMICAL WEAPONS ASSESSMENT EDGEWOOD, MARYLAND

US ARMY ENGINEERING AND SUPPORT CENTER, HUNTSVILLE HUNTSVILLE, ALABAMA

BLUE GRASS CHEMICAL AGENT DESTRUCTION PILOT PLANT PROJECT (BGCAPP)
RICHMOND, KENTUCKY

CONTRACT NO. DAAA09-03-D-0023

PROFESSIONAL STAMP

MUNITIONS DEMILITARIZATION BUILDING AGENT NEUTRALIZATION PROCESS FLOW DIAGRAM

DRAWING NUMBER 24915-07-M5-ANS-00001 SHEET 3 OF 6 REV 1

07-M5-ANS-1-3.PFZ BGCAPP_E2.BDR

DESIGN FILE: DGNSPEC$$$
PLOTTED BY: USER$ ON DATE$$$$$$$ AT SYTIME USING COLOR$$

MATERIAL BALANCE TABLE FOR PFD: 24915-07-M5-ANS-00001
AGENT NEUTRALIZATION SYSTEM - CASE AGENT VX CO-PROCESSING (REACTANT RECIPE 16.6% VX, 17.44% CAUSTIC (50%NaOH), 65.96% H2O) PEAK CASE

STREAM NUMBER		254	351	354	403	404	405	410	432	433	451	452	461
LINE DESCRIPTION		AGENT WASH FOR FLUSHING AGENT LINES	DRAIN AGENT TO AGENT HYDROLYZERS	AGENT WASH WATER TO AGENT HYDROLYZERS	50% WT NaOH TO AGENT HYDROLYZERS	NITROGEN TO AGENT HYDROLYZERS	DEMINERALIZED WATER TO AGENT HYDROLYZERS	AGENT HYDROLYZER RECIRCULATION	AGENT HYDROLYZER VENT	AGENT HYDROLYSATE TO STORAGE TANK	TOTAL AGENT HYDROLYSATE TRANSFER	VENT FROM AGENT HYDROLYZERS	VENT FROM AGENT HOLDING TANK
TEMPERATURE	*F	96.0	77	96	77	70	77	100	75	100	100	75	77
PRESSURE	PSIA	34.23	124.23	34.23	34.23	79.23	34.23	34.23	14.00	34.23	34.23	14.00	14.00
INSTANTANEOUS FLOW - VOLUME	GPM (ACFM)	20.0	12.0	157.0	33.3	(10.8)	35.0	410.0	(13.8)	204.9	204.9	(28.9)	(1.2)
DENSITY	LB/FT3	62.25	64.69	62.25	94.80	0.39	62.00	66.32	0.07	66.32	66.32	0.07	0.07
VISCOSITY	cP	0.96	10.00	0.96	53.00	0.018	0.76	2.70	0.018	2.70	2.70	0.018	0.018
MOLECULAR WEIGHT (GAS)						28.0			27.8			27.8	28.0
ENTHALPY (Note 8)	MM BTU/HR	-1.8E-01	2.3E-01	-1.6E+01	-3.94	-5.6E-12	-1.05		-3.4E-04	-11.50	-22.99	-6.9E-04	-4.0E-12
Liquid Solution (including suspended solids and dissolved gases)													
AGENT (VX)	LB/HR	5.2E-01	572.1	23.6									
Pyropdiester - [MeP(O)(OEt)]2O	LB/HR	1.7E-02	18.5	7.6E-01									
Free Mercaptan (R-SH)	LB/HR	5.6E-03	6.2	2.5E-01									
Diisopropylcarbodiimide (DICDI-stabilizer)	LB/HR	1.4E-03	15.4	6.3E-01				904.9		8.0	16.0		
Sulfur	LB/HR	7.9E-04	8.6E-01	3.5E-02				50.7		4.5E-01	9.0E-01		
Sulfuric Acid	LB/HR	1.7E-03	1.8	7.6E-02									
Nitrogen	LB/HR							10.8		9.5E-02	1.9E-01		
1,3-Diisopropylurea (DIPU)	LB/HR												
EMPA Na (Na-isopropyl methylphosphonate)	LB/HR							17,928.1		158.7	317.4		
MPA Na2 (Na2-methylphosphonate)	LB/HR							1,762.4		15.6	31.2		
RS Na	LB/HR							22,587.2		199.9	399.9		
Ethanol	LB/HR							579.9		5.1	10.3		
RSSR	LB/HR							787.6		7.0	13.9		
Na2SO4	LB/HR							157.3		1.4	2.8		
NaOH	LB/HR				336.4			8,068.7		71.4	142.8		
Water	LB/HR	52.5		2366.1	336.4		154.2	165,236.3		1462.6	2925.2		
Aluminum	LB/HR	5.6E-05	6.2E-02	2.5E-03				3.62		3.2E-02	6.4E-02		
Nickel	LB/HR	1.4E-05	1.5E-02	6.3E-04				9.0E-01		8.0E-03	1.6E-02		
Copper	LB/HR	2.3E-06	2.5E-03	1.0E-04				1.4E-01		1.3E-03	2.6E-03		
Iron	LB/HR	2.8E-04	3.1E-01	1.3E-02				18.1		1.6E-01	3.2E-01		
Vapor													
AGENT (VX)	LB/HR								1.2E-07			2.4E-07	
Pyropdiester - [MeP(O)(OEt)]2O	LB/HR								8.80E-06			1.8E-05	
Free Mercaptan (R-SH)	LB/HR								1.1E-04			2.2E-04	
Ethanol	LB/HR								9.2E-04			1.8E-03	
Water	LB/HR								5.9E-02			1.2E-01	
Nitrogen	LB/HR					6.0			2.9			10.6	4.8
Oxygen	LB/HR					7.0E-01							
Diisopropylcarbodiimide (DICDI-stabilizer)	LB/HR												
TOTAL PEAK FLOW (Notes 2, 8)	LB/HR	53.0	615.2	2365.0	672.8	6.7	154.2		3.0	1930.5	3861.0	10.7	4.8
TOTA AVERAGE FLOW (Notes 2, 8)	LB/HR	34.4	398.4	1648.7	435.5	4.4	8.8E-02		1.9	1248.6	2497.3	6.9	3.1
NOTES						4,9		1	3			6	

NOTES:

1. THIS STREAM SHOWS ONLY THE INSTANTANEOUS COMPONENT FLOWS DURING COOLING
2. THE PEAK CASE IS BASED ON MAXIMUM AGENT DRAIN RATE OF 15,379 lb/day. THE AVERAGE CASE IS BASED ON AGENT DRAIN RATE OF 9,960 lb/day.
3. VENTING RATE BASED ON REACTOR FILLING RATE PLUS THE NITROGEN SWEEP.
4. NITROGEN SUPPLY RATE BASED ON REACTOR EMPTYING RATE.
5. DELETED
6. VENT FROM EACH HYDROLYSATE SAMPLING TANK IS 107 LB/HR OF NITROGEN. THIS STREAM IS NOT VENTED SIMULTANEOUSLY WITH THE AGENT HYDROLYZER AND THUS IS NOT INCLUDED IN THE MATERIAL BALANCE.
7. TOTAL NUMBER OF BATCHES BATCHES IS APPROXIMATELY BASED ON 2,040 GAL/UNIT
8. AVERAGED FOR 24 HOURS.
9. OXYGEN AT APPROXIMATELY 0.01 LBMOL/LBMOL AGENT IS ASSUMED TO BE AVAILABLE FROM THE ENVIRONMENT FOR MINOR OXIDATION OF A SIDE REACTION, WHICH DOES NOT AFFECT THE AGENT DESTRUCTION REACTIONS.
10. BATCH STEPS FOR NEUTRALIZATION:

STEP	MIN.	PHASE ACTION
1	17	Charge reactor with wash water and demineralized water (5 min.).
2	15	Feed caustic to reactor w/ vent opened.
3	30	Agitation, recirculation, sweep with N2 (15 min) at 3psig & heat up to 194F.
4	56	Feed agent to recirculation loop.
5	3	Flush agent lines.
6	150	Recirc. & Maintain at 194F
7	45	Sampling (15 min.) and cool down to 100F
8	190	Waiting for lab analysis.
9	10	Transfer acceptable hydrolysate to agent hydrolysate storage tank.
TOTAL	516	

THIS DREAWING SUPERSEDES DRAWING 24915-07-M5-TNA-00001

NO.	DATE	DESCRIPTION	DR	CK	DL	PE	APPD
2	10-26-04	ISSUED FOR DESIGN (IFD)	EV	NI	SH	JB	JU
1	6-11-04	ISSUED FOR DESIGN (IFD)	EV	NI	SH	JB	JU

QUALITY ☒ LEVEL 1 ☐ LEVEL 2 ☐ LEVEL 3 ☐ ALL

BECHTEL PARSONS BLUE GRASS
A joint venture of Bechtel National, Inc. and Parsons Infrastructure & Technology Group Inc.

DOD PROGRAM MANAGER FOR ASSEMBLED CHEMICAL WEAPONS ASSESSMENT EDGEWOOD, MARYLAND

US ARMY ENGINEERING AND SUPPORT CENTER, HUNTSVILLE HUNTSVILLE, ALABAMA

BLUE GRASS CHEMICAL AGENT DESTRUCTION PILOT PLANT PROJECT (BGCAPP)
RICHMOND, KENTUCKY

CONTRACT NO. DAAA09-03-D-0023

MUNITIONS DEMILITARIZATION BUILDING AGENT NEUTRALIZATION PROCESS FLOW DIAGRAM

DRAWING NUMBER 24915-07-M5-ANS-00001 SHEET 4 OF 6 REV 1

PROFESSIONAL STAMP

DESIGN FILE: DONSEFC1 PLOTTED BY: USER4 ON DATE AT SYTMC USING COLOR

07-M5-ANS-1-4.PFZ BGCAPP_E2.BDR

MATERIAL BALANCE TABLE FOR PFD: 24915-07-M5-ANS-00001
AGENT NEUTRALIZATION SYSTEM - CASE AGENT VX PROJECTILE (REACTANT RECIPE 16.6% VX, 17.44% CAUSTIC (50%NaOH), 65.96% H2O)

PEAK CASE

STREAM NUMBER		254	351	354	403	404	405	410	432	433	451	452	461
LINE DESCRIPTION		AGENT WASH WATER FOR FLUSHING AGENT LINES	DRAIN AGENT TO AGENT HYDROLYZERS	AGENT WASH WATER TO AGENT HYDROLYZERS	50% WT NaOH TO AGENT HYDROLYZERS	NITROGEN TO AGENT HYDROLYZERS	DEMINERALIZED WATER TO AGENT HYDROLYZERS	AGENT HYDROLYZER RECIRCULATION	AGENT HYDROLYZER VENT	AGENT HYDROLYSATE TO STORAGE TANK	TOTAL AGENT HYDROLYSATE TRANSFER	VENT FROM AGENT HYDROLYZERS	VENT FROM AGENT HOLDING TANK
TEMPERATURE	°F	108	77	108	77	70		100	75	100	100	75	77
PRESSURE	PSIA	34.23	124.23	34.23	34.23	79.23		34.23	14.00	34.23	34.23	14.00	14.00
INSTANTANEOUS FLOW - VOLUME	GPM (ACFM)	20.0	11.9	141.5	33.1	(21.2)		410.0	(3.7)	203.6	203.6	(8.6)	(1.2)
DENSITY	LB/FT3	62.25	64.69	62.25	94.80	0.39		66.32	0.07	66.32	66.32	0.07	0.07
VISCOSITY	cP	0.96	10.00	0.96	53.00	0.018		2.70	0.018	2.70	2.70	0.018	0.018
MOLECULAR WEIGHT (GAS)						28.0			27.9			27.9	28.0
ENTHALPY (Note 8)	MM BTU/HR	-8.9E-02	5.7E-02	-4.2E+00	-0.96	-2.7E-12			-1.8E-04	-2.80	-5.60	-3.5E-04	-4.0E-12
Liquid Solution (including suspended solids and disolved gases)													
AGENT (VX)	LB/HR	1.2E-01	139.3	5.7									
Pyropdiester - [MeP(O)(OEt)]2O	LB/HR	3.9E-03	4.5	1.8E-01									
Free Mercaptan (R-SH)	LB/HR	1.3E-03	1.5	6.1E-02									
Diisopropylcarbodiimide (DICDI-stabilizer)	LB/HR	3.2E-03	3.7	1.5E-01				904.9		1.9	3.9		
Sulfur	LB/HR	1.8E-04	2.1E-01	8.6E-03				50.7		1.1E-01	2.2E-01		
Sulfuric Acid	LB/HR	3.9E-04	4.5E-01	1.8E-02									
Nitrogen	LB/HR							10.8		2.3E-02	4.6E-02		
1,3-Diisopropylurea (DIPU)	LB/HR												
EMPA Na (Na-isopropyl methylphosphonate)	LB/HR							17,929		38.6	77.3		
MPA Na2 (Na2-methylphosphonate)	LB/HR							1,762		3.8	7.6		
RS Na	LB/HR							22,580		48.7	97.3		
Ethanol	LB/HR							579.6		1.2	2.5		
RSSR	LB/HR							794.3		1.7	3.4		
Na2SO4	LB/HR							157.3		3.4E-01	6.8E-01		
NaOH	LB/HR				81.9			8,070		17.4	34.8		
Water	LB/HR	12.9		607.1	81.9			165,235		356.1	712.1		
Aluminum	LB/HR	1.3E-05	1.5E-02	6.1E-04				3.6		7.8E-03	1.6E-02		
Nickel	LB/HR	3.2E-06	3.7E-03	1.5E-04				9.1E-01		2.0E-03	3.9E-03		
Copper	LB/HR	5.2E-07	6.0E-04	2.4E-05				1.4E-01		3.1E-04	6.2E-04		
Iron	LB/HR	6.5E-05	7.5E-02	3.1E-03				18.1		3.9E-02	7.8E-02		
Vapor													
AGENT (VX)	LB/HR								6.0E-08			1.2E-07	
Pyropdiester - [MeP(O)(OEt)]2O	LB/HR								4.4E-06			8.8E-06	
Free Mercaptan (R-SH)	LB/HR								5.6E-05			1.1E-04	
Ethanol	LB/HR								6.0E-08			1.9E-03	
Water	LB/HR								3.0E-02			6.0E-02	
Nitrogen	LB/HR					1.5			7.0E-01			6.2	4.8
Oxygen	LB/HR					1.7E-01							
Diisopropylcarbodiimide (DICDI-stabilizer)	LB/HR								4.1E-05			8.1E-05	
TOTAL PEAK FLOW (Notes 2, 8)	LB/HR	13.0	149.8	613.2	163.8	1.7	0.0		0.8	470.0	939.9	6.3	4.8
TOTAL AVERAGE FLOW (Notes 2, 8)	LB/HR	9.5	109.4	457.6	119.7	1.2			0.6	346.4	692.8	4.6	3.5
NOTES						4,9		1	3			6	

NOTES:

1. THIS STREAM SHOWS ONLY THE INSTANTANEOUS COMPONENT FLOWS DURING COOLING.
2. THE PEAK CASE IS BASED ON MAXIMUM AGENT DRAIN RATE OF 3,744 lb/day. THE AVERAGE CASE IS BASED ON AGENT DRAIN RATE OF 2736 lb/day.
3. VENTING RATE BASED ON REACTOR FILLING RATE PLUS THE NITROGEN SWEEP.
4. NITROGEN SUPPLY RATE BASED ON REACTOR EMPTYING RATE.
5. DELETED
6. VENT FROM EACH HYDROLYSATE SAMPLING TANK IS 107 LB/HR. THIS STREAM IS NOT VENTED SIMULTANEOUSLY WITH THE AGENT HYDROLYZER AND THUS IS NOT INCLUDED IN THE MATERIAL BALANCE.
7. TOTAL NUMBER OF BATCHES BATCHES IS APPROXIMATELY BASED ON 2,040 GAL/UNIT
8. AVERAGED FOR 24 HOURS.
9. OXYGEN AT APPROXIMATELY 0.01 LBMOL/LBMOL AGENT IS ASSUMED TO BE AVAILABLE FROM THE ENVIRONMENT FOR MINOR OXIDATION OF A SIDE REACTION, WHICH DOES NOT AFFECT THE AGENT DESTRUCTION REACTIONS.
10. **BATCH STEPS FOR NEUTRALIZATION:**

STEP	MIN.	PHASE ACTION
1	17	Charge reactor with wash water and demineralized water (15 min.).
2	15	Feed caustic to reactor (15 min) w/ vent opened.
3	30	Agitation, recirculation, sweep with N2 (15 min) at 3psig & heat up to 194F.
4	56	Feed agent to recirculation loop.
5	3	Flush agent lines.
6	150	Recirc. & Maintain at 194F
7	45	Sampling (15 min.) and cool down to 100F
8	190	Waiting for lab analysis.
9	10	Transfer acceptable hydrolysate to agent hydrolysate storage tank.
TOTAL	516	

11. THERE IS EXTRA AGENT WASH WATER AFTER AGENT HYDROLYZERS NEUTRALIZE THE AGENT FROM PROJECTILES ACCORDING TO THE ABOVE RECIPE. APPROXIMATELY 20,615 LB/DAY AND 14,964 LB/DAY OF REMAINING AGENT WASH WATER IN PEAK AND AVERAGE CASES, RESPECTIVELY, WILL ALSO BE PROCESSED IN AGENT HYDROLYZERS.

THIS DREAWING SUPERSEDES DRAWING 24915-07-M5-TNA-00001

NO.	DATE	DESCRIPTION	DR	CK	DL	PE	APPD
2	10-26-04	ISSUED FOR DESIGN (IFD)	EV	NI	SH	JB	JU
1	6-11-04	ISSUED FOR DESIGN (IFD)	EV	NI	SH	JB	JU

QUALITY ☒ LEVEL 1 ☐ LEVEL 2 ☐ LEVEL 3 ☐ ALL

BECHTEL PARSONS BLUE GRASS
A joint venture of Bechtel National, Inc. and Parsons Infrastructure & Technology Group Inc.

DOD PROGRAM MANAGER FOR ASSEMBLED CHEMICAL WEAPONS ASSESSMENT EDGEWOOD, MARYLAND

US ARMY ENGINEERING AND SUPPORT CENTER, HUNTSVILLE HUNTSVILLE, ALABAMA

BLUE GRASS CHEMICAL AGENT DESTRUCTION PILOT PLANT PROJECT (BGCAPP)
RICHMOND, KENTUCKY

CONTRACT NO. DAAA09-03-D-0023

MUNITIONS DEMILITARIZATION BUILDING AGENT NEUTRALIZATION PROCESS FLOW DIAGRAM

DRAWING NUMBER 24915-07-M5-ANS-00001 | SHEET 5 OF 6 | REV 1

PROFESSIONAL STAMP

DESIGN FILE: DONSEFC1 PLOTTED BY: USER4 ON DATE AT SYTMC USING COLOR

07-M5-ANS-1-5.PFZ BGCAPP_E2.BDR

MATERIAL BALANCE TABLE FOR PFD: 24915-07-M5-ANS-00001

AGENT NEUTRALIZATION SYSTEM - CASE AGENT H (REACTANT RECIPE: 8.6% H, 5.8% CAUSTIC (50% NaOH), 85.6% H2O)

PEAK CASE

STREAM NUMBER		254	351	354	403	404	405	410	432	433	451	452	461
LINE DESCRIPTION		SPENT DECON FOR FLUSHING AGENT LINES	DRAIN AGENT TO AGENT HYDROLYZERS	AGENT WASH WATER TO AGENT HYDROLYZERS	50% WT NaOH TO AGENT HYDROLYZERS	NITROGEN TO AGENT HYDROLYZERS	DEMINERALIZED WATER TO AGENT HYDROLYZERS	AGENT HYDROLYZER RECIRCULATION	AGENT HYDROLYZER VENT	AGENT HYDROLYSATE TO SAMPLING TANK	AGENT HYDROLYSATE TRANSFER	VENT FROM AGENT HYDROLYZERS	VENT FROM AGENT HOLDING TANK
TEMPERATURE	°F	77	2	108	77	77		100	75	100	100	75	75
PRESSURE	PSIA	34.23	124.23	34.23	34.23	79.23		24.23	14.00	34.23	34.23	14.00	14.00
INSTANTANEOUS FLOW - VOLUME	GPM (ACFM)	17.6	8.2	126	10.7	(10.12)		410.0	(8.8)	202.5	202.5	(18.2)	(.51)
DENSITY	LB/FT3	62.0	80.2	63.2	94.8	0.014		65.2	0.07	65.2	65.2	0.07	0.07
VISCOSITY	cP	0.89	5.8	0.91	53.0	0.251		0.69	0.018	0.69	0.69	0.018	0.02
MOLECULAR WEIGHT (GAS)						28.0			27.8			27.8	28.0
ENTHALPY (Note 8)	MM BTU/HR	-3.00E-01	1.85E-02	-2.02E+01	-1.20E+00	-3.14E-06			-3.01E-04	-11.20	-22.39	-6.03E-04	-2.14E-07
Liquid Solution (including suspended solids)													
AGENT (HD)	LB/HR		44.6	109.3									
Dichloro ethane	LB/HR		9.0E-01	2.2									
Q	LB/HR		6.1	15.0									
Vinyl-Q	LB/HR												
Isomers (CCBS)	LB/HR												
Polysufides (HS3)	LB/HR		1.2	3.1						2.2	4.3		
Sulfonium Ions	LB/HR		17.4	42.6									
Dithiane	LB/HR		1.0	2.5						1.8	3.5		
Trithiolane	LB/HR												
TDG	LB/HR									59.1	118.2		
Q-OH	LB/HR									8.8	17.6		
(CH2)6(OH)2S	LB/HR												
(CH2)6(S)2(OH)	LB/HR									27.0	54.0		
Sodium chloride (NaCl)	LB/HR									73.6	147.1		
NaOH	LB/HR				102.2					7.5E-01	1.5		
Water	LB/HR	43.9		2984.7	102.2					1565.4	3130.7		
Nitrogen	LB/HR									4.0E-01	8.0E-01		
Ethylene Glycol	LB/HR									1.0	1.9		
S6	LB/HR		5.8	14.2						10.0	20.1		
Fe	LB/HR		10.9	26.7						18.8	37.6		
RCRA 8	LB/HR		5.4E-03	1.3E-02						9.4E-03	1.9E-02		
Mn	LB/HR		8.4E-02	2.0E-01						1.4E-01	2.9E-01		
Si	LB/HR		1.5E-02	3.7E-02						2.6E-02	5.2E-02		
Other Metals/Elements	LB/HR		3.3E-02	8.1E-02						5.7E-02	1.1E-01		
Vapor													
Dithiane	LB/HR												
Polysufides (HS3)	LB/HR								2.5E-07			5.0E-07	
Dithiane	LB/HR												
Sulfonium Ions	LB/HR												
HCl	LB/HR												
Q-OH	LB/HR												
Water	LB/HR								5.2E-02			1.0E-01	
Nitrogen	LB/HR					5.9			2.5			7.3	2.2
Oxygen	LB/HR												
TOTAL PEAK FLOW (Notes 2, 8)	LB/HR	43.9	88.2	3200.7	204.4	5.9	0.0		2.6	1769.0	3537.9	7.4	2.2
TOTAL AVERAGE FLOW (Notes 2, 8)	LB/HR	28.9	58.0	2105.1	134.4	3.9			1.7	1162.7	2325.4	4.9	1.5
NOTE				5		4		1	3			6	

1 (revision 1)

NOTES:

1. THIS STREAM SHOWS ONLY THE INSTANTANEOUS COMPONENT FLOWS DURING COOLING.
2. THE PEAK CASE IS BASED ON MAXIMUM AGENT DRAIN RATE OF 7300 lb/day. THE AVERAGE CASE IS BASED ON AGENT DRAIN RATE OF 4802 lb/day. (revision 1, 2)
3. VENTING RATE BASED ON REACTOR FILLING RATE PLUS THE NITROGEN SWEEP.
4. NITROGEN SUPPLY RATE BASED ON REACTOR EMPTYING RATE.
5. DELETED
6. THE VENT FROM SAMPLING TANKS IS NOT CONSIDERED IN THIS MATERIAL BALANCE. (revision 1, 3)
7. TOTAL NUMBER OF BATCHES IS APPROXIMATELY BASED ON 2,040 GAL/UNIT.
8. AVERAGED FOR 24 HOURS.
10. BATCH STEPS FOR NEUTRALIZATION: (revision 1, 4)

STEP	MIN.	PHASE ACTION
1	30	Charge reactor with wash water.
2	20	Heat up to 194°F with opened vent.
3	30	Agitation, recirculation, and sweep with N2 at 3psig.
4	10	Feed agent to recirc. loop with closed vent.
5	3	Flush agent lines
6	35	Recirc. & Maintain at 194F
7	30	Adjusting pH with caustic.
8	45	Additional cook.
9	30	Cool down to 100°F.
10	10	Pump out to agent hydrolysate sampling tank.
TOTAL	243	

THIS DREAWING SUPERSEDES DRAWING 24915-07-M5-TNA-00001

NO.	DATE	DESCRIPTION	DR	CK	DL	PE	APPD
1	10-28-04	ISSUED FOR DESIGN (IFD)	EV	NI	SH	JB	JU
0	6-11-04	ISSUED FOR DESIGN (IFD)	EV	NI	SH	JB	JU

QUALITY ☒ LEVEL 1 ☐ LEVEL 2 ☐ LEVEL 3 ☐ ALL

BECHTEL PARSONS BLUE GRASS — A Joint Venture of Bechtel National, INC. and Parsons Infrastructure & Technology Group Inc.

DOD PROGRAM MANAGER FOR ASSEMBLED CHEMICAL WEAPONS ASSESSMENT EDGEWOOD, MARYLAND

US ARMY ENGINEERING AND SUPPORT CENTER, HUNTSVILLE HUNTSVILLE, ALABAMA

BLUE GRASS CHEMICAL AGENT DESTRUCTION PILOT PLANT PROJECT (BGCAPP)
RICHMOND, KENTUCKY

CONTRACT NO. DAAA09-03-D-0023

PROFESSIONAL STAMP

MUNITIONS DEMILITARIZATION BUILDING AGENT NEUTRALIZATION PROCESS FLOW DIAGRAM

DRAWING NUMBER 24915-07-M5-ANS-00001 | SHEET 6 OF 6 | REV 1

07-M5-ANS-1-6.PFZ BGCAPP_E2.BDR

DESIGN FILE: DGNSPEC$$
PLOTTED BY: USER$ ON DATE$$$$$$$ AT SYTIME USING COLOR$$$$$$$$$$$$$$$$$$$$$$$$$$$$$$$$$$$$$$$

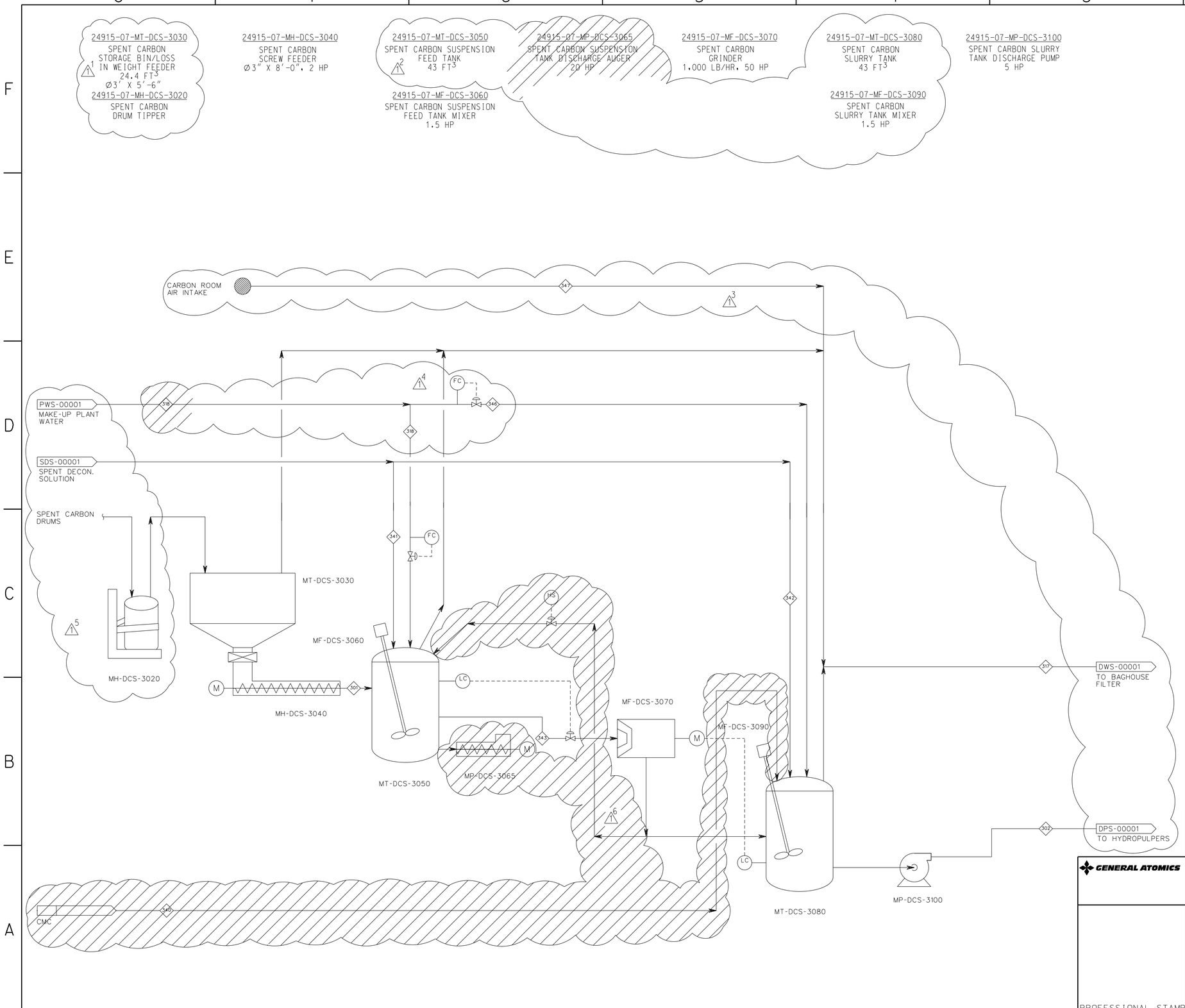

NOTES:

1. ALL INFORMATION, CALCULATIONS, AND ASSUMPTIONS USED IN THE DETERMINATION OF STREAM DATA MAY BE FOUND IN THE "MASS AND ENERGY BALANCE FOR THE DUNNAGE SHREDDING & HANDLING (DSH) SYSTEM - BGCAPP" GA DOCUMENT NO. 24915-07-M4-DWS-00001
2. ⟨XXX⟩ REPRESENTS M&EB STREAM NUMBERS.
3. DUE TO A CHANGE IN LOCATOR CODE NOMENCLATURE, THIS DRAWING SUPERCEDES DWG 24915-07-M5-HHDC-0001.

Signature Valid: cn=Blayne Monen, o=Issued, ou=Configuration Management, c=US 2004.11.10 13:44:17 -08'00'

NO.	DATE	DESCRIPTION	DR	CK	DL	PE	APPD
1		IDS COMMENT REVISIONS	NL	BH	RB	NW	DJ
0	7-2-04	ISSUED FOR DESIGN	JG	BH	RB	NW	DJ

QUALITY ☐ LEVEL 1 ☒ LEVEL 2 ☐ LEVEL 3 ☐ ALL

BECHTEL PARSONS BLUE GRASS
A Joint Venture of Bechtel National, INC. and Parsons Infrastructure & Technology Group Inc.

DOD PROGRAM MANAGER FOR ASSEMBLED CHEMICAL WEAPONS ASSESSMENT EDGEWOOD, MARYLAND

US ARMY ENGINEERING AND SUPPORT CENTER, HUNTSVILLE HUNTSVILLE, ALABAMA

GENERAL ATOMICS

BLUE GRASS CHEMICAL AGENT DESTRUCTION PILOT PLANT PROJECT (BGCAPP)
RICHMOND, KENTUCKY

CONTRACT NO. DAAA09-03-D-0023

DUNNAGE SHREDDING & HANDLING SYSTEM CARBON PROCESS FLOW DIAGRAM

DRAWING NUMBER 24915-07-M5-DCS-00001 | SHEET 1 OF 2 | REV 1

PROFESSIONAL STAMP

BGCAPP_D3.BDR

Stream Number:	301	302	345	317	318	346	340		341	342	343	347
Stream Description	Spent Carbon	Carbon Slurry to Hydropulper	Carbon Slurry to SCWO	Vent Gas to Baghouse Fillter	Make-up Watern to Suspension Tank	Make-up Water to Slurry Tank	CMC to Hydropulper	Spent Decon Solution (2.25% Bleach)	Spent Decon Solution to Suspension Tank	Spent Decon Solution to Slurry Tank	Carbon Mix from Suspension to Slurry Tank	Carbon Room Change out
Temperature F	68	68.8	68.8	68			68	68	68	68	72.8	70.8
Pressure psi	14.23	14.23	14.23	14.23			14.23	14.23	14.23	14.23	14.23	14.23
Instantaneous Flow lb/hr (ACFM)	552.896	5528.96	503.75	(1764)			41.4672	3317.376	1658.688	1658.688	1105.792	(760)
Density lb/cuft		65.2	67.685	0.073			93.028	61.284	61.284	61.284	69.5	0.072
Viscosity cP				0.018								0.018
Molecular Weight				28.623								28.623
Enthalpy MMBtu/hr	1.133	-1.873	-1.882	-0.346			-0.008	-3.006	-1.002	-2.004	0.137	-0.345
Mass Flow Liquid, Gas lb/hr												
N2	0	0	0	5845.847			0	0	0	0	0	2484.96
O2	0	0	0	1775.914			0	0	0	0	0	754.91
WATER	0	439.875	439.875	101.953			0	439.875	146.625	293.25	146.625	43.34
NACLO	0	10.125	10.125	0			0	10.125	3.375	6.75	3.375	0
Mass Flow Solid lb/hr												
CARBON	50	50	50	0.504			0	0	0	0	50.251	0
CMC	0	0	3.439	0			3.439	0	0	0	0	0
SODIUM	0	0	0.311	0			0.311	0	0	0	0	0
Total Average Flow lb/hr	50	500	503.75	7724.218	0	0	3.75	450	150	300	200.251	3283.21
Notes												

7

NO.	DATE	DESCRIPTION	DR	CK	DL	PE	APPD
1		IDS COMMENT REVISIONS	NL	BH	RB	NW	DJ
0	7-2-04	ISSUED FOR DESIGN	JG	BH	RB	NW	DJ

QUALITY ☐ LEVEL 1 ☒ LEVEL 2 ☐ LEVEL 3 ☐ ALL

BECHTEL PARSONS BLUE GRASS
A Joint Venture of Bechtel National, INC. and Parsons Infrastructure & Technology Group Inc.

DOD PROGRAM MANAGER FOR ASSEMBLED CHEMICAL WEAPONS ASSESSMENT EDGEWOOD, MARYLAND

US ARMY ENGINEERING AND SUPPORT CENTER, HUNTSVILLE HUNTSVILLE, ALABAMA

GENERAL ATOMICS

BLUE GRASS CHEMICAL AGENT DESTRUCTION PILOT PLANT PROJECT (BGCAPP)
RICHMOND, KENTUCKY

CONTRACT NO. DAAA09-03-D-0023

DUNNAGE SHREDDING & HANDLING SYSTEM
CARBON
PROCESS FLOW DIAGRAM

DRAWING NUMBER 24915-07-M5-DCS-00001 | SHEET 2 OF 2 | REV 1

PROFESSIONAL STAMP

bgcapp_d3.dwg

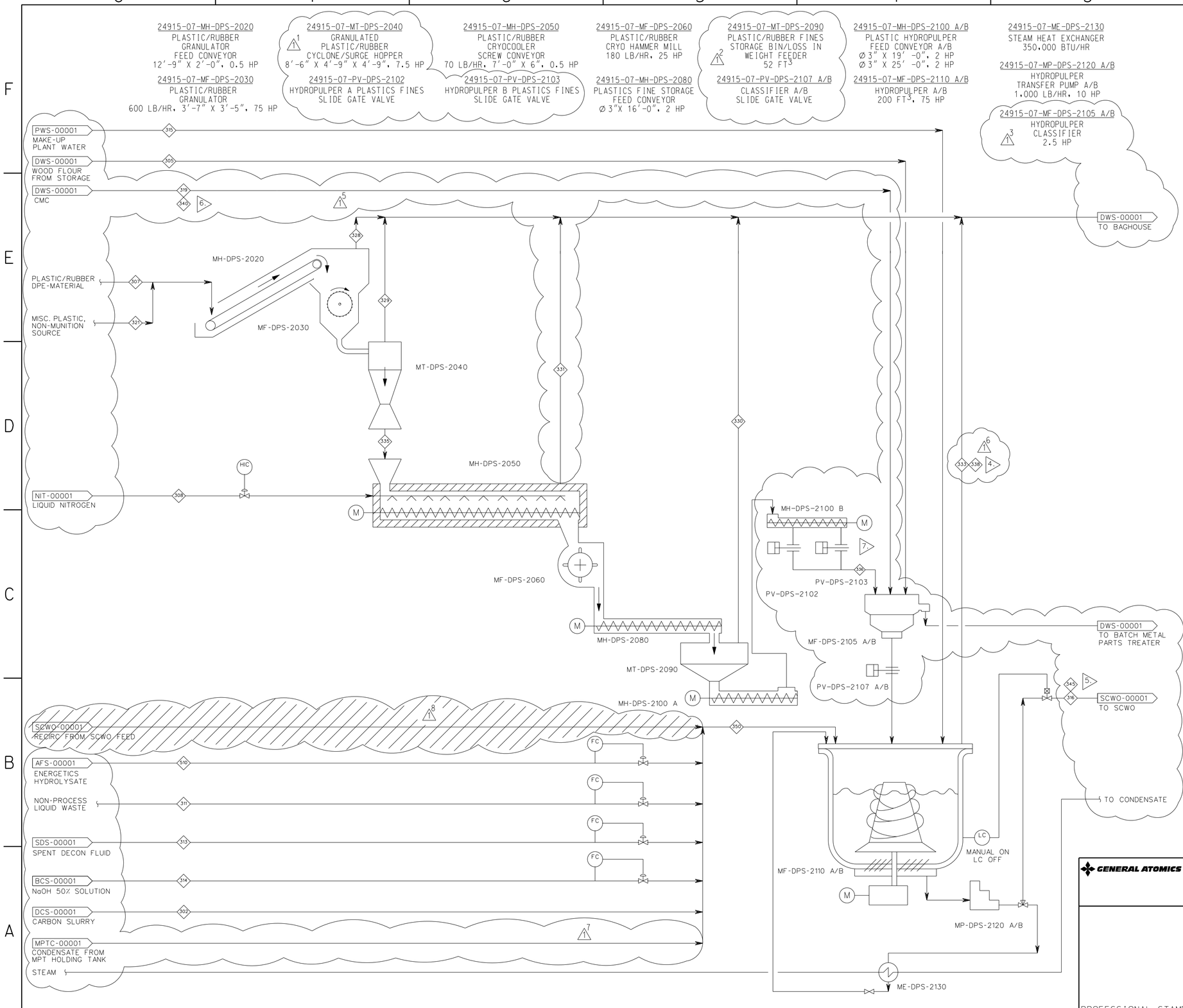

NOTES:

1. ALL INFORMATION, CALCULATIONS, AND ASSUMPTIONS USED IN THE DETERMINATION OF STREAM DATA MAY BE FOUND IN THE "MASS AND ENERGY BALANCE FOR THE DUNNAGE SHREDDING & HANDLING (DSH) SYSTEM - BGCAPP" GA DOCUMENT NO. 24915-07-M4-DWS-00001
2. ◇xxx REPRESENTS M&EB STREAM NUMBERS.
3. DUE TO A CHANGE IN LOCATOR CODE NOMENCLATURE, THIS DRAWING SUPERCEDES DWG 24915-07-M5-HHDP-0001.
4. VENT STREAM 333 IS FOR HYDROPULPER A AND VENT STREAM 338 IS FOR HYDROPULPER B.
5. STREAM 316 REPRESENTS WOOD/PLASTIC DUNNAGE SLURRY STREAM TO SCWO. STREAM 345 REPRESENTS CARBON SLURRY STREAM TO SCWO.
6. STREAM 319 REPRESENTS CMC TO HYDROPULPER DURING WOOD/PLASTIC PROCESSING. STREAM 340 REPRESENTS CMC TO HYDROPULPER DURING CARBON PROCESSING.
7. SCREW CONVEYOR HAS DUAL SLIDE GATE VALVES ATTACHED TO HOUSING. SLIDE GATE VALUES ALTERNATE TO BATCH FILL ONLY ONE CLASSIFIER/HYDROPULPER AT A TIME.

Signature Valid
cn=Blayne Monen, o=Issued, ou=Configuration Management, c=US
2004.11.11 07:04:48 -08'00'

NO.	DATE	DESCRIPTION	DR	CK	DL	PE	APPD
1		IDS COMMENT REVISIONS	NL	BH	RB	NW	DJ
0	7-2-04	ISSUED FOR DESIGN	JG	BH	RB	NW	DJ

QUALITY ☐ LEVEL 1 ☒ LEVEL 2 ☐ LEVEL 3 ☐ ALL

BECHTEL PARSONS BLUE GRASS
A Joint Venture of Bechtel National, INC. and Parsons Infrastructure & Technology Group Inc.

DOD PROGRAM MANAGER FOR ASSEMBLED CHEMICAL WEAPONS ASSESSMENT EDGEWOOD, MARYLAND

US ARMY ENGINEERING AND SUPPORT CENTER, HUNTSVILLE HUNTSVILLE, ALABAMA

GENERAL ATOMICS

BLUE GRASS CHEMICAL AGENT DESTRUCTION PILOT PLANT PROJECT (BGCAPP)

RICHMOND, KENTUCKY

CONTRACT NO. DAAA09-03-D-0023

DUNNAGE SHREDDING & HANDLING SYSTEM PLASTIC PROCESS FLOW DIAGRAM

DRAWING NUMBER 24915-07-M5-DPS-00001 | SHEET 1 OF 9 | REV 1

PROFESSIONAL STAMP

BGCAPP_D3.BDR

GB Campaign (Peak Rates)	Rockets	Projectiles	Total
Process Rate (rnd/hr)	40	15	55

Stream Number:	107	114	305	306	307	308	311			313	314	315	316	319	320	
Stream Description	Wood / Dunnage from RSM	Wood / Dunnage from PHS	Wood Flour to Hydropulper	Metals from Magnetic Separator	DPE Suits	Liquid Nitrogen to Cryocooler	Non-process Liquid Waste (Spent Oil) to Hydropulper	Spent Decon Fluid (2.25% Bleach)	Spent Decon Fluid (2.25% Bleach) to Storage	Spent Decon Fluid (2.25% Bleach) to Hydropulper	50% Sodium Hydroxide Feed to Hydropulper	Process Water to Hydropulper	Dunnage Slurry to SCWO	CMC to Hydropulper	Wood Pallet	Wood, Misc Wood, Trash, Debris, Protective Clothing to Storage
Temperature F	68	68	68		68	-300	68	68	68	68	68	68	68	68	68	68
Pressure psi	14.23	14.23	14.23	14.23	14.23	48	14.23	14.23	14.23	14.23	14.23		14.23	14.23	14.23	14.23
Instantaneous Flow lb/hr (ACFM)			1210.17514				370.15			582.60264	27.4584	0				
Density lb/cuft	82.464	82.464	82.54		179.393	47.046	48.212	61.982	61.982	61.982	95.394		69.237	57.289	82.464	82.457
Viscosity cP																
Molecular Weight																
Enthalpy MMBtu/hr	-2.663	-0.664	-0.474		-0.002	-0.008	-0.017	-11.948	-11.657	-0.291	-0.012		-5.859	-0.02	-3.327	-2.998
Mass Flow Liquid, Gas lb/hr																
N2	0	0	0	0	0	48.125	0	0	0	0	0	0	0	0	0	0
O2	0	0	0	0	0	0	0	0	0	0	0	0	0	0	0	0
WATER	100.8	25.15	17.783	0	0	0	0	1736.53	1694.22	42.31	1.02	0	723.267	0	125.95	113.668
NAOH	0	0	0	0	0	0	0	0	0	0	1.02	0	0	0	0	0
NACLO	0	0	0	0	0	0	0	39.97	38.996	0.974	0	0	0.974	0	0	0
C14H28	0	0	0	0	0	0	27.5	0	0	0	0	0	27.5	0	0	0
NACL	0	0	0	0	0	0	0	0	0	0	0	0	39.543	0	0	0
NA2SO4	0	0	0	0	0	0	0	0	0	0	0	0	85.78	0	0	0
CO2	0	0	0	0	0	0	0	0	0	0	0	0	0.706	0	0	0
NANO2	0	0	0	0	0	0	0	0	0	0	0	0	11.084	0	0	0
NANO3	0	0	0	0	0	0	0	0	0	0	0	0	5.956	0	0	0
SODIUM FORMATE	0	0	0	0	0	0	0	0	0	0	0	0	11.581	0	0	0
SODIUM ACETATE	0	0	0	0	0	0	0	0	0	0	0	0	12.077	0	0	0
GLYCEROL	0	0	0	0	0	0	0	0	0	0	0	0	0.91	0	0	0
Mass Flow Solid lb/hr																
WOOD	403.2	100.6	72.097	0	0	0	0	0	0	0	0	0	71.635	0	503.8	453.7
DPE	0	0	0.012	0	8.25	0	0	0	0	0	0	0	0	0	0	0.078
PLASTIC	0	0	0.017	0	0	0	0	0	0	0	0	0	1.488	0	0	0.104
CMC	0	0	0	0	0	0	0	0	0	0	0	0	6.877	6.877	0	0
SODIUM	0	0	0	0	0	0	0	0	0	0	0	0	0.623	0.623	0	0
NAILS	2.67	2.5	0	5.17	0	0	0	0	0	0	0	0	0	0	5.17	0
Total Average Flow lb/hr	506.67	128.25	89.909	5.17	8.25	48.125	27.5	1776.5	1733.216	43.284	2.04	0	1000.001	7.5	634.92	567.55
Notes	1	1	1										1		1	1

1 - Wood is composed of 20 wt% water, see Assumption 3

Stream Number:	321	322	323	324	325	326	327	328	329	330	331	332	333 & 338	335		336	337	339	350	510
Stream Description	Misc Plastic from Non-munition Sources	Misc Wood, Trash, Debris, Protective Clothing	Vent Two Roll Shredder	Vent Hammer Mill	Vent Wood Micronizer Inlet	Vent Wood Micronizer Cyclone	Vent Wood Flour Storage Tank	Vent Plastic / Rubber Granulator	Vent Plastic / Rubber Cyclone	Vent Plastic / Rubber Storage Bin	Nitrogen Vent to Baghouse	CMC Vent	Vent Hydropulper	Total DPE Suits and Misc Plastic from Non-munition Sources	DPE Suits and Misc Plastic from Non-munition Sources to Storage	DPE Suits and Misc Plastic from Non-munition Sources to Hydropulper	Total Wood and Misc Wood, Trash, Debris, Protective Clothing	Vent Gas to Carbon Beds	Total Liquids to Hydropulper	Energetic Hydrolysate Required to Hydropulper
Temperature F	68	68	68	68	68	68	68	68	68	68	41.7	68	68	68	68	68	68	68	118.1	122
Pressure psi	14.23	14.23	14.23	14.23	14.23	14.23	14.23	14.23	14.23	14.23	48	14.23	14.23	14.23	14.23	14.23	14.23	14.23	14.23	14.23
Instantaneous Flow lb/hr (ACFM)																				11134.0043
Density lb/cuft	68.748	82.464	0.072	0.072	0.072	0.075	0.074	0.072	0.072	0.072	0.25	0.072	0.072	93.449	93.449	93.449	82.464	0.072	67.353	68.766
Viscosity cP			0.018	0.018	0.018	0.018	0.018	0.018	0.018	0.018	0.017	0.018	0.018					0.018		
Molecular Weight			28.633	28.633	28.635	28.688	28.669	28.626	28.623	28.632	28.013	28.623	28.632					28.621		
Enthalpy MMBtu/hr	-0.008	-0.145	-0.298	-0.298	-0.246	-0.048	-0.062	-0.157	-0.026	-0.026	-0.001	-0.026	-0.026	-0.011	-0.009	-0.001	-3.472	-1.033	-5.326	-5.006
Mass Flow Liquid, Gas lb/hr																				
N2	0	0	2520.377	2520.377	2016.302	127.699	252.038	1512.226	252.038	247.749	56.703	252.038	247.749	0	0	0	0	10005.3	0	0
O2	0	0	765.667	765.667	612.534	38.794	76.567	459.4	76.567	76.567	0	76.567	76.567	0	0	0	0	3024.895	0	0
WATER	0	5.5	43.956	43.956	35.165	2.227	4.395	26.374	4.396	4.396	0	4.396	4.396	0	0	0	131.45	173.655	705.083	661.753
NAOH	0	0	0	0	0	0	0	0	0	0	0	0	0	0	0	0	0	0	1.02	0
NACLO	0	0	0	0	0	0	0	0	0	0	0	0	0	0	0	0	0	0	0.974	0
C14H28	0	0	0	0	0	0	0	0	0	0	0	0	0	0	0	0	0	0	27.5	0
NACL	0	0	0	0	0	0	0	0	0	0	0	0	0	0	0	0	0	0	38.051	38.051
NA2SO4	0	0	0	0	0	0	0	0	0	0	0	0	0	0	0	0	0	0	85.78	85.78
CO2	0	0	0	0	0	0	0	0	0	0	0	0	0	0	0	0	0	0	0	0
NANO2	0	0	0	0	0	0	0	0	0	0	0	0	0	0	0	0	0	0	11.084	11.084
NANO3	0	0	0	0	0	0	0	0	0	0	0	0	0	0	0	0	0	0	5.956	5.956
SODIUM FORMATE	0	0	0	0	0	0	0	0	0	0	0	0	0	0	0	0	0	0	11.581	11.581
SODIUM ACETATE	0	0	0	0	0	0	0	0	0	0	0	0	0	0	0	0	0	0	12.077	12.077
GLYCEROL	0	0	0	0	0	0	0	0	0	0	0	0	0	0	0	0	0	0	0.91	0.91
Mass Flow Solid lb/hr																				
WOOD	0	22	7.046	7.046	7.046	7.046	7.141	0	0	0	0	0	0	0	0	0	525.8	0.004	0	0
DPE	0	0	0	0	0	0	0.001	0.091	0	0	0	0	0	8.25	7.055	1.104	0	0	0	0
PLASTIC	11	0	0	0	0	0	0.001	0.121	0	0	0	0	0	11	9.407	1.472	0	0	0	0
CMC	0	0	0	0	0	0	0	0	0	0	0	0	0	0	0	0	0	0	0	0
SODIUM	0	0	0	0	0	0	0	0	0	0	0	0	0	0	0	0	0	0	0	0
NAILS	0	0	0	0	0	0	0	0	0	0	0	0	0	0	0	0	5.17	0	0	0
Total Average Flow lb/hr	11	27.5	3337.046	3337.046	2671.047	175.766	340.143	1998.212	333.001	328.712	56.703	333.001	328.712	19.25	16.462	2.576	662.42	13203.85	900.016	827.192
Notes	1	1	1	1	1	1	1										1	1		

NO.	DATE	DESCRIPTION	DR	CK	DL	PE	APPD
6		IDS COMMENT REVISIONS	NL	BH	RB	NW	DJ
0	7-2-04	ISSUED FOR DESIGN	JG	BH	RB	NW	DJ

QUALITY ☐ LEVEL 1 ☒ LEVEL 2 ☐ LEVEL 3 ☐ ALL

BECHTEL PARSONS BLUE GRASS
A Joint Venture of Bechtel National, INC. and Parsons Infrastructure & Technology Group Inc.

DOD PROGRAM MANAGER FOR ASSEMBLED CHEMICAL WEAPONS ASSESSMENT EDGEWOOD, MARYLAND

US ARMY ENGINEERING AND SUPPORT CENTER, HUNTSVILLE HUNTSVILLE, ALABAMA

GENERAL ATOMICS

BLUE GRASS CHEMICAL AGENT DESTRUCTION PILOT PLANT PROJECT (BGCAPP)
RICHMOND, KENTUCKY

CONTRACT NO. DAAA09-03-D-0023

DUNNAGE SHREDDING & HANDLING SYSTEM PLASTIC PROCESS FLOW DIAGRAM

DRAWING NUMBER 24915-07-M5-DPS-00001

SHEET 2 OF 9

REV 1

PROFESSIONAL STAMP

bgcapp_d3.dwg

VX Campaign (Peak Rates)	Rockets	Projectiles	Total
Process Rate (md/hr)	48	26	74

Stream Number:	107	114	305	306	307	308	311			313	314	315	316	319	320	
Stream Description	Wood / Dunnage from RSM	Wood / Dunnage from PHS	Wood Flour to Hydropulper	Metals from Magnetic Separator	DPE Suits	Liquid Nitrogen to Cryocooler	Non-process Liquid Waste (Spent Oil) to Hydropulper	Spent Decon Fluid (2.25% Bleach)	Spent Decon Fluid (2.25% Bleach) to Storage	Spent Decon Fluid (2.25% Bleach) to Hydropulper	50% Sodium Hydroxide Feed to Hydropulper	Process Water to Hydropulper	Dunnage Slurry to SCWO	CMC to Hydropulper	Wood Pallet	Wood, Misc Wood, Trash, Debris, Protective Clothing to Storage
Temperature F	68	68	68		68	-300	68	68	68	68	68	68	68	68	68	68
Pressure psi	14.23	14.23	14.23	14.23	14.23	48	14.23	14.23	14.23	14.23	14.23		14.23	14.23	14.23	14.23
Instantaneous Flow lb/hr (ACFM)			1204.15852				498.02			582.60264	32.1694	0				
Density lb/cuft	82.464	82.464	82.541		179.393	47.046	48.212	61.982	61.982	61.982	95.394		68.926	57.289	82.464	82.459
Viscosity cP																
Molecular Weight																
Enthalpy MMBtu/hr	-3.195	-0.577	-0.472		-0.003	-0.011	-0.022	-16.075	-15.784	-0.291	-0.014		-5.805	-0.02	-3.772	-3.496
Mass Flow Liquid, Gas lb/hr																
N2	0	0	0	0	0	64.75	0	0	0	0	0	0	0	0	0	0
O2	0	0	0	0	0	0	0	0	0	0	0	0	0	0	0	0
WATER	120.96	21.84	17.693	0	0	0	0	2336.42	2294.11	42.31	1.195	0	715.545	0	142.8	132.507
NAOH	0	0	0	0	0	0	0	0	0	0	1.195	0	0	0	0	0
NACLO	0	0	0	0	0	0	0	53.78	52.806	0.974	0	0	0.974	0	0	0
C14H28	0	0	0	0	0	0	37	0	0	0	0	0	37	0	0	0
NACL	0	0	0	0	0	0	0	0	0	0	0	0	39.346	0	0	0
NA2SO4	0	0	0	0	0	0	0	0	0	0	0	0	84.759	0	0	0
CO2	0	0	0	0	0	0	0	0	0	0	0	0	0.827	0	0	0
NANO2	0	0	0	0	0	0	0	0	0	0	0	0	10.952	0	0	0
NANO3	0	0	0	0	0	0	0	0	0	0	0	0	5.885	0	0	0
SODIUM FORMATE	0	0	0	0	0	0	0	0	0	0	0	0	11.443	0	0	0
SODIUM ACETATE	0	0	0	0	0	0	0	0	0	0	0	0	11.933	0	0	0
GLYCEROL	0	0	0	0	0	0	0	0	0	0	0	0	0.899	0	0	0
Mass Flow Solid lb/hr																
WOOD	483.84	87.36	71.735	0	0	0	0	0	0	0	0	0	71.193	0	571.2	529.061
DPE	0	0	0.015	0	11.1	0	0	0	0	0	0	0	0	0	0	0.108
PLASTIC	0	0	0.019	0	0	0	0	0	0	0	0	0	1.744	0	0	0.143
CMC	0	0	0	0	0	0	0	0	0	0	0	0	6.877	6.877	0	0
SODIUM	0	0	0	0	0	0	0	0	0	0	0	0	0.623	0.623	0	0
NAILS	3.2	3.25	0	6.45	0	0	0	0	0	0	0	0	0	0	6.45	0
Total Average Flow lb/hr	608	112.45	89.462	6.45	11.1	64.75	37	2390.2	2346.916	43.284	2.39	0	1000	7.5	720.45	661.819
Notes	1	1	1										1		1	1

1 - Wood is composed of 20 wt% water, see Assumption 3

Stream Number:	321	322	323	324	325	326	327	328	329	330	331	332	333 & 338	335		336	337	339	350	510
Stream Description	Misc Plastic from Non-munition Sources	Misc Wood, Trash, Debris, Protective Clothing	Vent Two Roll Shredder	Vent Hammer Mill	Vent Wood Micronizer Inlet	Vent Wood Micronizer Cyclone	Vent Wood Flour Storage Tank	Vent Plastic / Rubber Granulator	Vent Plastic / Rubber Cyclone	Vent Plastic / Rubber Storage Bin	Nitrogen Vent to Baghouse	CMC Vent	Vent Hydropulper	Total DPE Suits and Misc Plastic from Non-munition Sources	DPE Suits and Misc Plastic from Non-munition Sources to Storage	DPE Suits and Misc Plastic from Non-munition Sources to Hydropulper	Total Wood and Misc Wood, Trash, Debris, Protective Clothing	Vent Gas to Carbon Beds	Total Liquids to Hydropulper	Energetic Hydrolysate Required to Hydropulper
Temperature F	68	68	68	68	68	68	68	68	68	68	31.5	68	68	68	68	68	68	68	117.8	122
Pressure psi	14.23	14.23	14.23	14.23	14.23	14.23	14.23	14.23	14.23	14.23	48	14.23	14.23	14.23	14.23	14.23	14.23	14.23	14.23	14.23
Instantaneous Flow lb/hr (ACFM)																				11001.4772
Density lb/cuft	68.748	82.464	0.072	0.072	0.072	0.076	0.074	0.072	0.072	0.072	0.256	0.072	0.072	93.449	93.449	93.449	82.464	0.072	67.001	68.766
Viscosity cP			0.018	0.018	0.018	0.018	0.018	0.018	0.018	0.018	0.017	0.018	0.018					0.018		
Molecular Weight			28.634	28.634	28.636	28.692	28.673	28.627	28.623	28.632	28.013	28.623	28.632					28.62		
Enthalpy MMBtu/hr	-0.011	-0.195	-0.303	-0.303	-0.251	-0.053	-0.067	-0.157	-0.026	-0.026	-0.001	-0.026	-0.026	-0.015	-0.013	-0.002	-3.968	-1.034	-5.274	-4.946
Mass Flow Liquid, Gas lb/hr																				
N2	0	0	2520.377	2520.377	2016.302	127.699	252.038	1512.226	252.038	247.749	73.328	252.038	247.749	0	0	0	0	10021.92	0	0
O2	0	0	765.667	765.667	612.534	38.794	76.567	459.4	76.567	76.567	0	76.567	76.567	0	0	0	0	3024.895	0	0
WATER	0	7.4	43.956	43.956	35.165	2.227	4.395	26.374	4.396	4.396	0	4.396	4.396	0	0	0	150.2	173.655	697.382	653.877
NAOH	0	0	0	0	0	0	0	0	0	0	0	0	0	0	0	0	0	0	1.195	0
NACLO	0	0	0	0	0	0	0	0	0	0	0	0	0	0	0	0	0	0	0.974	0
C14H28	0	0	0	0	0	0	0	0	0	0	0	0	0	0	0	0	0	0	37	0
NACL	0	0	0	0	0	0	0	0	0	0	0	0	0	0	0	0	0	0	37.598	37.598
NA2SO4	0	0	0	0	0	0	0	0	0	0	0	0	0	0	0	0	0	0	84.759	84.759
CO2	0	0	0	0	0	0	0	0	0	0	0	0	0	0	0	0	0	0	0	0
NANO2	0	0	0	0	0	0	0	0	0	0	0	0	0	0	0	0	0	0	10.952	10.952
NANO3	0	0	0	0	0	0	0	0	0	0	0	0	0	0	0	0	0	0	5.885	5.885
SODIUM FORMATE	0	0	0	0	0	0	0	0	0	0	0	0	0	0	0	0	0	0	11.443	11.443
SODIUM ACETATE	0	0	0	0	0	0	0	0	0	0	0	0	0	0	0	0	0	0	11.933	11.933
GLYCEROL	0	0	0	0	0	0	0	0	0	0	0	0	0	0	0	0	0	0	0.899	0.899
Mass Flow Solid lb/hr																				
WOOD	14.8	29.6	8.051	8.051	8.051	8.051	8.16	0	0	0	0	0	0	0	0	0	600.8	0.004	0	0
DPE	0	0	0	0	0	0	0.001	0.122	0	0	0	0	0	11.1	9.685	1.293	0	0	0	0
PLASTIC	14.8	0	0	0	0	0	0.002	0.163	0	0	0	0	0	14.8	12.913	1.724	0	0	0	0
CMC	0	0	0	0	0	0	0	0	0	0	0	0	0	0	0	0	0	0	0	0
SODIUM	0	0	0	0	0	0	0	0	0	0	0	0	0	0	0	0	0	0	0	0
NAILS	0	0	0	0	0	0	0	0	0	0	0	0	0	0	0	0	6.45	0	0	0
Total Average Flow lb/hr	14.8	37	3338.051	3338.051	2672.052	176.771	341.163	1998.285	333.001	328.712	73.328	333.001	328.712	25.9	22.598	3.017	757.45	13220.47	900.02	817.346
Notes		1	1	1	1	1	1										1	1		

NO.	DATE	DESCRIPTION	DR	CK	DL	PE	APPD
16		IDS COMMENT REVISIONS	NL	BH	RB	NW	DJ
0	7-2-04	ISSUED FOR DESIGN	JG	BH	RB	NW	DJ

QUALITY ☐ LEVEL 1 ☒ LEVEL 2 ☐ LEVEL 3 ☐ ALL

BECHTEL PARSONS BLUE GRASS
A Joint Venture of Bechtel National, INC. and Parsons Infrastructure & Technology Group Inc.

DOD PROGRAM MANAGER FOR ASSEMBLED CHEMICAL WEAPONS ASSESSMENT EDGEWOOD, MARYLAND

US ARMY ENGINEERING AND SUPPORT CENTER, HUNTSVILLE HUNTSVILLE, ALABAMA

GENERAL ATOMICS

BLUE GRASS CHEMICAL AGENT DESTRUCTION PILOT PLANT PROJECT (BGCAPP)
RICHMOND, KENTUCKY

CONTRACT NO. DAAA09-03-D-0023

DUNNAGE SHREDDING & HANDLING SYSTEM PLASTIC PROCESS FLOW DIAGRAM

DRAWING NUMBER 24915-07-M5-DPS-00001 | SHEET 3 OF 9 | REV 1

PROFESSIONAL STAMP

bgcapp_d3.dwg

H Campaign (Peak Rates)	Total
Process Rate (rnd/hr)	26

Stream Number:	107	114	305	306	307	308	311			313	314	315	316	319	320	
Stream Description	Wood / Dunnage from RSM	Wood / Dunnage from PHS	Wood Flour to Hydropulper	Metals from Magnetic Separator	DPE Suits	Liquid Nitrogen to Cryocooler	Non-process Liquid Waste (Spent Oil) to Hydropulper	Spent Decon Fluid (2.25% Bleach)	Spent Decon Fluid (2.25% Bleach) to Storage	Spent Decon Fluid (2.25% Bleach) to Hydropulper	50% Sodium Hydroxide Feed to Hydropulper	Process Water to Hydropulper	Dunnage Slurry to SCWO	CMC to Hydropulper	Wood Pallet	Wood, Misc Wood, Trash, Debris, Protective Clothing to Storage
Temperature F		68	68		68	-300	68	68	68	68	68	68	68	68	68	68
Pressure psi		14.23	14.23	14.23	14.23	48	14.23	14.23	14.23	14.23	14.23		14.23	14.23	14.23	14.23
Instantaneous Flow lb/hr (ACFM)																
Density lb/cuft		82.464	82.546		179.393	47.046	48.212	61.982	61.982	61.982	95.394		66.889	57.289	82.464	82.304
Viscosity cP																
Molecular Weight																
Enthalpy MMBtu/hr		-0.577	-0.455		-0.001	-0.004	-0.008	-5.648	-5.073	-0.575	-0.029		-6.174	-0.02	-0.577	-0.191
Mass Flow Liquid, Gas lb/hr																
N2		0	0	0	0	22.75	0	0	0	0	0	0	0	0	0	0
O2		0	0	0	0	0	0	0	0	0	0	0	0	0	0	0
WATER		21.84	17.035	0	0	0	0	820.9	737.324	83.576	2.485	0	801.005	0	21.84	7.406
NAOH		0	0	0	0	0	0	0	0	0	2.485	0	0	0	0	0
NACLO		0	0	0	0	0	0	18.9	16.976	1.924	0	0	1.924	0	0	0
C14H28		0	0	0	0	0	13	0	0	0	0	0	13	0	0	0
NACL		0	0	0	0	0	0	0	0	0	0	0	27.851	0	0	0
NA2SO4		0	0	0	0	0	0	0	0	0	0	0	54.805	0	0	0
CO2		0	0	0	0	0	0	0	0	0	0	0	1.72	0	0	0
NANO2		0	0	0	0	0	0	0	0	0	0	0	4.461	0	0	0
NANO3		0	0	0	0	0	0	0	0	0	0	0	0	0	0	0
SODIUM FORMATE		0	0	0	0	0	0	0	0	0	0	0	15.294	0	0	0
SODIUM ACETATE		0	0	0	0	0	0	0	0	0	0	0	0.876	0	0	0
GLYCEROL		0	0	0	0	0	0	0	0	0	0	0	0	0	0	0
Mass Flow Solid lb/hr																
WOOD		87.36	69.064	0	0	0	0	0	0	0	0	0	67.939	0	87.36	28.695
DPE		0	0.03	0	3.9	0	0	0	0	0	0	0	0	0	0	0.013
PLASTIC		0	0.04	0	0	0	0	0	0	0	0	0	3.625	0	0	0.017
CMC		0	0	0	0	0	0	0	0	0	0	0	6.877	6.877	0	0
SODIUM		0	0	0	0	0	0	0	0	0	0	0	0.623	0.623	0	0
NAILS		3.25	0	3.25	0	0	0	0	0	0	0	0	0	0	3.25	0
Total Average Flow lb/hr	0	112.45	86.169	3.25	3.9	22.75	13	839.8	754.3	85.5	4.97	0	1000	7.5	112.45	36.131
Notes		1	1										1		1	1

1 - Wood is composed of 20 wt% water, see Assumption 3

Stream Number:	321	322	323	324	325	326	327	328	329	330	331	332	333 & 338	335		336	337	339	350	510
Stream Description	Misc Plastic from Non-munition Sources	Misc Wood, Trash, Debris, Protective Clothing	Vent Two Roll Shredder	Vent Hammer Mill	Vent Wood Micronizer Inlet	Vent Wood Micronizer Cyclone	Vent Wood Flour Storage Tank	Vent Plastic / Rubber Granulator	Vent Plastic / Rubber Cyclone	Vent Plastic / Rubber Storage Bin	Nitrogen Vent to Baghouse	CMC Vent	Vent Hydropulper	Total DPE Suits and Misc Plastic from Non-munition Sources	DPE Suits and Misc Plastic from Non-munition Sources to Storage	DPE Suits and Misc Plastic from Non-munition Sources to Hydropulper	Total Wood and Misc Wood, Trash, Debris, Protective Clothing	Vent Gas to Carbon Beds	Total Liquids to Hydropulper	Energetic Hydrolysate Required to Hydropulper
Temperature F	68	68	68	68	68	68	68	68	68	68	55.9	68	68	68	68	68	68	68	116.4	122
Pressure psi	14.23	14.23	14.23	14.23	14.23	14.23	14.23	14.23	14.23	14.23	48	14.23	14.23	14.23	14.23	14.23	14.23	14.23	14.23	14.23
Instantaneous Flow lb/hr (ACFM)																				
Density lb/cuft	68.748	82.464	0.072	0.072	0.072	0.073	0.072	0.072	0.072	0.072	0.243	0.072	0.072	93.449	93.449	93.449	82.464	0.072	65.092	65.727
Viscosity cP			0.018	0.018	0.018	0.018	0.018	0.018	0.018	0.018	0.017	0.018	0.018					0.018		
Molecular Weight			28.626	28.626	28.626	28.648	28.639	28.625	28.623	28.632	28.013	28.623	28.632					28.622		
Enthalpy MMBtu/hr	-0.004	-0.069	-0.268	-0.268	-0.216	-0.02	-0.033	-0.157	-0.026	-0.026	0	-0.026	-0.026	-0.005	-0.002	-0.004	-0.646	-1.033	-5.654	-5.041
Mass Flow Liquid, Gas lb/hr																				
N2	0	0	2520.377	2520.377	2016.302	127.699	252.038	1512.226	252.038	247.749	31.328	252.038	247.749	0	0	0	0	9979.92	0	0
O2	0	0	765.667	765.667	612.534	38.794	76.567	459.4	76.567	76.567	0	76.567	76.567	0	0	0	0	3024.895	0	0
WATER	0	2.6	43.956	43.956	35.165	2.227	4.395	26.374	4.396	4.396	0	4.396	4.396	0	0	0	24.44	173.655	782.995	696.934
NAOH	0	0	0	0	0	0	0	0	0	0	0	0	0	0	0	0	0	0	2.485	0
NACLO	0	0	0	0	0	0	0	0	0	0	0	0	0	0	0	0	0	0	1.924	0
C14H28	0	0	0	0	0	0	0	0	0	0	0	0	0	0	0	0	0	0	13	0
NACL	0	0	0	0	0	0	0	0	0	0	0	0	0	0	0	0	0	0	24.216	24.216
NA2SO4	0	0	0	0	0	0	0	0	0	0	0	0	0	0	0	0	0	0	54.805	54.805
CO2	0	0	0	0	0	0	0	0	0	0	0	0	0	0	0	0	0	0	0	0
NANO2	0	0	0	0	0	0	0	0	0	0	0	0	0	0	0	0	0	0	4.461	4.461
NANO3	0	0	0	0	0	0	0	0	0	0	0	0	0	0	0	0	0	0	0	0
SODIUM FORMATE	0	0	0	0	0	0	0	0	0	0	0	0	0	0	0	0	0	0	15.294	15.294
SODIUM ACETATE	0	0	0	0	0	0	0	0	0	0	0	0	0	0	0	0	0	0	0.876	0.876
GLYCEROL	0	0	0	0	0	0	0	0	0	0	0	0	0	0	0	0	0	0	0	0
Mass Flow Solid lb/hr																				
WOOD	0	10.4	1.31	1.31	1.31	1.31	1.328	0	0	0	0	0	0	0	0	0	97.76	0.001	0	0
DPE	0	0	0	0	0	0	0	0.043	0	0	0	0	0	3.9	1.169	2.688	0	0	0	0
PLASTIC	5.2	0	0	0	0	0	0.001	0.057	0	0	0	0	0	5.2	1.558	3.585	0	0	0	0
CMC	0	0	0	0	0	0	0	0	0	0	0	0	0	0	0	0	0	0	0	0
SODIUM	0	0	0	0	0	0	0	0	0	0	0	0	0	0	0	0	0	0	0	0
NAILS	0	0	0	0	0	0	0	0	0	0	0	0	0	0	0	0	3.25	0	0	0
Total Average Flow lb/hr	5.2	13	3331.31	3331.31	2665.311	170.03	334.329	1998.1	333.001	328.712	31.328	333.001	328.712	9.1	2.727	6.273	125.45	13178.47	900.056	796.586
Notes	1	1	1	1	1	1	1										1	1		

NO.	DATE	DESCRIPTION	DR	CK	DL	PE	APPD
6		IDS COMMENT REVISIONS	NL	BH	RB	NW	DJ
0	7-2-04	ISSUED FOR DESIGN	JG	BH	RB	NW	DJ

QUALITY ☐ LEVEL 1 ☒ LEVEL 2 ☐ LEVEL 3 ☐ ALL

BECHTEL PARSONS BLUE GRASS
A Joint Venture of Bechtel National, INC. and Parsons Infrastructure & Technology Group Inc.

DOD PROGRAM MANAGER FOR ASSEMBLED CHEMICAL WEAPONS ASSESSMENT EDGEWOOD, MARYLAND

US ARMY ENGINEERING AND SUPPORT CENTER, HUNTSVILLE HUNTSVILLE, ALABAMA

GENERAL ATOMICS

BLUE GRASS CHEMICAL AGENT DESTRUCTION PILOT PLANT PROJECT (BGCAPP)
RICHMOND, KENTUCKY

CONTRACT NO. DAAA09-03-D-0023

DUNNAGE SHREDDING & HANDLING SYSTEM PLASTIC PROCESS FLOW DIAGRAM

DRAWING NUMBER 24915-07-M5-DPS-00001 | SHEET 4 OF 9 | REV 1

PROFESSIONAL STAMP

bgcapp_d3.dwg

GB Campaign (Rockets only)	Rockets		Total																																
Process Rates (rnd/hr)	40		40																																
Stream Number:	107	114	305	306	307	308	311			313	314	315	316	319	320		321	322	323	324	325	326	327	328	329	330	331	332	333 & 338	335		336	337	339	350	510
Stream Description	Wood / Dunnage from RSM	Wood / Dunnage from PHS	Wood Flour to Hydropulper	Metals from Magnetic Separator	DPE Suits	Liquid Nitrogen to Cryocooler	Non-process Liquid Waste (Spent Oil) to Hydropulper	Spent Decon Fluid (2.25% Bleach)	Spent Decon Fluid (2.25% Bleach) to Storage	Spent Decon Fluid (2.25% Bleach) to Hydropulper	50% Sodium Hydroxide Feed to Hydropulper	Process Water to Hydropulper	Dunnage Slurry to SCWO	CMC to Hydropulper	Wood Pallet	Wood, Misc Wood, Trash, Debris, Protective Clothing to Storage	Misc Plastic from Non-munition Sources	Misc Wood, Trash, Debris, Protective Clothing	Vent Two Roll Shredder	Vent Hammer Mill	Vent Wood Micronizer Inlet	Vent Wood Micronizer Cyclone	Vent Wood Flour Storage Tank	Vent Plastic / Rubber Granulator	Vent Plastic / Rubber Cyclone	Vent Plastic / Rubber Storage Bin	Nitrogen Vent to Baghouse	CMC Vent	Vent Hydropulper	Total DPE Suits and Misc Plastic from Non-munition Sources	DPE Suits and Misc Plastic from Non-munition Sources to Storage	DPE Suits and Misc Plastic from Non-munition Sources to Hydropulper	Total Wood and Misc Wood, Trash, Debris, Protective Clothing	Vent Gas to Carbon Beds	Total Liquids to Hydropulper	Energetic Hydrolysate Required to Hydropulper
Temperature F	68		68		68	-300	68	68	68	68	68	68	68	68	68	68	68	68	68	68	68	68	68	68	68	68	49.3	68	68	68	68	68	68	68	118.4	122
Pressure psi	14.23		14.23	14.23	14.23	48	14.23	14.23	14.23	14.23	14.23		14.23	14.23	14.23	14.23	14.23	14.23	14.23	14.23	14.23	14.23	14.23	14.23	14.23	14.23	48	14.23	14.23	14.23	14.23	14.23	14.23	14.23	14.23	14.23
Instantaneous Flow lb/hr (ACFM)			1213.16326				269.2			582.60264	25.11636	0																								11237.2425
Density lb/cuft	82.464		82.54		179.393	47.046	48.212	61.982	61.982	61.982	95.394		69.485	57.289	82.464	82.453	68.748	82.464	0.072	0.072	0.072	0.075	0.073	0.072	0.072	0.072	0.247	0.072	0.072	93.449	93.449	93.449	82.464	0.072	67.645	68.766
Viscosity cP																			0.018	0.018	0.018	0.018	0.018	0.018	0.018	0.018	0.017	0.018	0.018					0.018		
Molecular Weight																			28.632	28.632	28.633	28.681	28.664	28.625	28.623	28.632	28.013	28.623	28.632					28.622		
Enthalpy MMBtu/hr	-2.663		-0.476		-0.002	-0.006	-0.012	-8.689	-8.398	-0.291	-0.011		-5.901	-0.02	-2.663	-2.293	-0.006	-0.106	-0.291	-0.291	-0.238	-0.041	-0.055	-0.157	-0.026	-0.026	0	-0.026	-0.026	-0.008	-0.006	-0.001	-2.768	-1.033	-5.366	-5.052
Mass Flow Liquid, Gas lb/hr																																				
N2	0		0	0	0	35	0	0	0	0	0	0	0	0	0	0	0	0	2520.377	2520.377	2016.302	127.699	252.038	1512.226	252.038	247.749	43.578	252.038	247.749	0	0	0	0	9992.17	0	0
O2	0		0	0	0	0	0	0	0	0	0	0	0	0	0	0	0	0	765.667	765.667	612.534	38.794	76.567	459.4	76.567	76.567	0	76.567	76.567	0	0	0	0	3024.895	0	0
WATER	100.8		17.827	0	0	0	0	1262.93	1220.62	42.31	0.933	0	729.327	0	100.8	86.973	0	4	43.956	43.956	35.165	2.227	4.395	26.374	4.396	4.396	0	4.396	4.396	0	0	0	104.8	173.655	711.134	667.89
NAOH	0		0	0	0	0	0	0	0	0	0.933	0	0	0	0	0	0	0	0	0	0	0	0	0	0	0	0	0	0	0	0	0	0	0	0.933	0
NACLO	0		0	0	0	0	0	29.07	28.096	0.974	0	0	0.974	0	0	0	0	0	0	0	0	0	0	0	0	0	0	0	0	0	0	0	0	0	0.974	0
C14H28	0		0	0	0	0	20	0	0	0	0	0	20	0	0	0	0	0	0	0	0	0	0	0	0	0	0	0	0	0	0	0	0	0	20	0
NACL	0		0	0	0	0	0	0	0	0	0	0	39.768	0	0	0	0	0	0	0	0	0	0	0	0	0	0	0	0	0	0	0	0	0	38.404	38.404
NA2SO4	0		0	0	0	0	0	0	0	0	0	0	86.575	0	0	0	0	0	0	0	0	0	0	0	0	0	0	0	0	0	0	0	0	0	86.575	86.575
CO2	0		0	0	0	0	0	0	0	0	0	0	0.646	0	0	0	0	0	0	0	0	0	0	0	0	0	0	0	0	0	0	0	0	0	0	0
NANO2	0		0	0	0	0	0	0	0	0	0	0	11.187	0	0	0	0	0	0	0	0	0	0	0	0	0	0	0	0	0	0	0	0	0	11.187	11.187
NANO3	0		0	0	0	0	0	0	0	0	0	0	6.011	0	0	0	0	0	0	0	0	0	0	0	0	0	0	0	0	0	0	0	0	0	6.011	6.011
SODIUM FORMATE	0		0	0	0	0	0	0	0	0	0	0	11.688	0	0	0	0	0	0	0	0	0	0	0	0	0	0	0	0	0	0	0	0	0	11.688	11.688
SODIUM ACETATE	0		0	0	0	0	0	0	0	0	0	0	12.189	0	0	0	0	0	0	0	0	0	0	0	0	0	0	0	0	0	0	0	0	0	12.189	12.189
GLYCEROL	0		0	0	0	0	0	0	0	0	0	0	0.918	0	0	0	0	0	0	0	0	0	0	0	0	0	0	0	0	0	0	0	0	0	0.918	0.918
Mass Flow Solid lb/hr																																				
WOOD	403.2		72.278	0	0	0	0	0	0	0	0	0	71.855	0	403.2	346.92	0	16	5.617	5.617	5.617	5.617	5.694	0	0	0	0	0	0	0	0	0	419.2	0.003	0	0
DPE	0		0.011	0	6	0	0	0	0	0	0	0	0	0	0	0.055	0	0	0	0	0	0	0.001	0.066	0	0	0	0	0	6	4.925	1.009	0	0	0	0
PLASTIC	0		0.015	0	0	0	0	0	0	0	0	0	1.361	0	0	0.073	8	0	0	0	0	0	0.001	0.088	0	0	0	0	0	8	6.566	1.346	0	0	0	0
CMC	0		0	0	0	0	0	0	0	0	0	0	6.877	6.877	0	0	0	0	0	0	0	0	0	0	0	0	0	0	0	0	0	0	0	0	0	0
SODIUM	0		0	0	0	0	0	0	0	0	0	0	0.623	0.623	0	0	0	0	0	0	0	0	0	0	0	0	0	0	0	0	0	0	0	0	0	0
NAILS	2.67		0	2.67	0	0	0	0	0	0	0	0	0	0	2.67	0	0	0	0	0	0	0	0	0	0	0	0	0	0	0	0	0	2.67	0	0	0
Total Average Flow lb/hr	506.67	0	90.131	2.67	6	35	20	1292	1248.716	43.284	1.866	0	999.999	7.5	506.67	434.021	8	20	3335.617	3335.617	2669.618	174.337	338.696	1998.154	333.001	328.712	43.578	333.001	328.712	14	11.491	2.355	526.67	13190.72	900.013	834.862
Notes	1		1										1		1	1	1	1	1	1	1	1	1										1	1		
1 - Wood is composed of 20 wt% water, see Assumption 3																																				

12

NO.	DATE	DESCRIPTION	DR	CK	DL	PE	APPD
16		IDS COMMENT REVISIONS	NL	BH	RB	NW	DJ
0	7-2-04	ISSUED FOR DESIGN	JG	BH	RB	NW	DJ

QUALITY ☐ LEVEL 1 ☒ LEVEL 2 ☐ LEVEL 3 ☐ ALL

BECHTEL PARSONS BLUE GRASS
A Joint Venture of Bechtel National, INC. and Parsons Infrastructure & Technology Group Inc.

DOD PROGRAM MANAGER FOR ASSEMBLED CHEMICAL WEAPONS ASSESSMENT EDGEWOOD, MARYLAND

US ARMY ENGINEERING AND SUPPORT CENTER, HUNTSVILLE HUNTSVILLE, ALABAMA

GENERAL ATOMICS

BLUE GRASS CHEMICAL AGENT DESTRUCTION PILOT PLANT PROJECT (BGCAPP)
RICHMOND, KENTUCKY

CONTRACT NO. DAAA09-03-D-0023

DUNNAGE SHREDDING & HANDLING SYSTEM PLASTIC PROCESS FLOW DIAGRAM

DRAWING NUMBER 24915-07-M5-DPS-00001 | SHEET 5 OF 9 | REV 1

PROFESSIONAL STAMP

bgcapp_d3.dwg

VX Campaign (Rockets only)	Rockets		Total																																
Process Rates (md/hr)	48		48																																
Stream Number:	107	114	305	306	307	308	311			313	314	315	316	319	320		321	322	323	324	325	326	327	328	329	330	331	332	333 & 338	335		336	337	339	350	510
Stream Description	Wood / Dunnage from RSM	Wood / Dunnage from PHS	Wood Flour to Hydropulper	Metals from Magnetic Separator	DPE Suits	Liquid Nitrogen to Cryocooler	Non-process Liquid Waste (Spent Oil) to Hydropulper	Spent Decon Fluid (2.25% Bleach)	Spent Decon Fluid (2.25% Bleach) to Storage	Spent Decon Fluid (2.25% Bleach) to Hydropulper	50% Sodium Hydroxide Feed to Hydropulper	Process Water to Hydropulper	Dunnage Slurry to SCWO	CMC to Hydropulper	Wood Pallet	Wood, Misc Wood, Trash, Debris, Protective Clothing to Storage	Misc Plastic from Non-munition Sources	Misc Wood, Trash, Debris, Protective Clothing	Vent Two Roll Shredder	Vent Hammer Mill	Vent Wood Micronizer Inlet	Vent Wood Micronizer Cyclone	Vent Wood Flour Storage Tank	Vent Plastic / Rubber Granulator	Vent Plastic / Rubber Cyclone	Vent Plastic / Rubber Storage Bin	Nitrogen Vent to Baghouse	CMC Vent	Vent Hydropulper	Total DPE Suits and Misc Plastic from Non-munition Sources	DPE Suits and Misc Plastic from Non-munition Sources to Storage	DPE Suits and Misc Plastic from Non-munition Sources to Hydropulper	Total Wood and Misc Wood, Trash, Debris, Protective Clothing	Vent Gas to Carbon Beds	Total Liquids to Hydropulper	Energetic Hydrolysate Required to Hydropulper
Temperature F	68		68		68	-300	68	68	68	68	68	68	68	68	68	68	68	68	68	68	68	68	68	68	68	68	45.3	68	68	68	68	68	68	68	118.2	122
Pressure psi	14.23		14.23	14.23	14.23	48	14.23	14.23	14.23	14.23	14.23		14.23	14.23	14.23	14.23	14.23	14.23	14.23	14.23	14.23	14.23	14.23	14.23	14.23	14.23	48	14.23	14.23	14.23	14.23	14.23	14.23	14.23	14.23	14.23
Instantaneous Flow lb/hr (ACFM)			1213.16326				323.04			582.60264	25.11636	0																								11183.4294
Density lb/cuft	82.464		82.54		179.393	47.046	48.212	61.982	61.982	61.982	95.394		69.353	57.289	82.464	82.456	68.748	82.464	0.072	0.072	0.072	0.075	0.074	0.072	0.072	0.072	0.249	0.072	0.072	93.449	93.449	93.449	82.464	0.072	67.486	68.766
Viscosity cP																			0.018	0.018	0.018	0.018	0.018	0.018	0.018	0.018	0.017	0.018	0.018					0.018		
Molecular Weight																			28.633	28.633	28.635	28.687	28.668	28.626	28.623	28.632	28.013	28.623	28.632					28.621		
Enthalpy MMBtu/hr	-3.195		-0.476		-0.002	-0.007	-0.014	-10.427	-10.136	-0.291	-0.011		-5.879	-0.02	-3.195	-2.846	-0.007	-0.127	-0.297	-0.297	-0.244	-0.047	-0.061	-0.157	-0.026	-0.026	0	-0.026	-0.026	-0.009	-0.008	-0.001	-3.322	-1.033	-5.345	-5.028
Mass Flow Liquid, Gas lb/hr																																				
N2	0		0	0	0	42	0	0	0	0	0	0	0	0	0	0	0	0	2520.377	2520.377	2016.302	127.699	252.038	1512.226	252.038	247.749	50.578	252.038	247.749	0	0	0	0	9999.17	0	0
O2	0		0	0	0	0	0	0	0	0	0	0	0	0	0	0	0	0	765.667	765.667	612.534	38.794	76.567	459.4	76.567	76.567	0	76.567	76.567	0	0	0	0	3024.895	0	0
WATER	120.96		17.827	0	0	0	0	1515.52	1473.21	42.31	0.933	0	726.127	0	120.96	107.933	0	4.8	43.956	43.956	35.165	2.227	4.395	26.374	4.396	4.396	0	4.396	4.396	0	0	0	125.76	173.655	707.934	664.69
NAOH	0		0	0	0	0	0	0	0	0	0.933	0	0	0	0	0	0	0	0	0	0	0	0	0	0	0	0	0	0	0	0	0	0	0	0.933	0
NACLO	0		0	0	0	0	0	34.88	33.906	0.974	0	0	0.974	0	0	0	0	0	0	0	0	0	0	0	0	0	0	0	0	0	0	0	0	0	0.974	0
C14H28	0		0	0	0	0	24	0	0	0	0	0	24	0	0	0	0	0	0	0	0	0	0	0	0	0	0	0	0	0	0	0	0	0	24	0
NACL	0		0	0	0	0	0	0	0	0	0	0	39.584	0	0	0	0	0	0	0	0	0	0	0	0	0	0	0	0	0	0	0	0	0	38.22	38.22
NA2SO4	0		0	0	0	0	0	0	0	0	0	0	86.16	0	0	0	0	0	0	0	0	0	0	0	0	0	0	0	0	0	0	0	0	0	86.161	86.161
CO2	0		0	0	0	0	0	0	0	0	0	0	0.646	0	0	0	0	0	0	0	0	0	0	0	0	0	0	0	0	0	0	0	0	0	0	0
NANO2	0		0	0	0	0	0	0	0	0	0	0	11.134	0	0	0	0	0	0	0	0	0	0	0	0	0	0	0	0	0	0	0	0	0	11.134	11.134
NANO3	0		0	0	0	0	0	0	0	0	0	0	5.982	0	0	0	0	0	0	0	0	0	0	0	0	0	0	0	0	0	0	0	0	0	5.982	5.982
SODIUM FORMATE	0		0	0	0	0	0	0	0	0	0	0	11.632	0	0	0	0	0	0	0	0	0	0	0	0	0	0	0	0	0	0	0	0	0	11.632	11.632
SODIUM ACETATE	0		0	0	0	0	0	0	0	0	0	0	12.131	0	0	0	0	0	0	0	0	0	0	0	0	0	0	0	0	0	0	0	0	0	12.131	12.131
GLYCEROL	0		0	0	0	0	0	0	0	0	0	0	0.914	0	0	0	0	0	0	0	0	0	0	0	0	0	0	0	0	0	0	0	0	0	0.914	0.914
Mass Flow Solid lb/hr																																				
WOOD	483.84		72.278	0	0	0	0	0	0	0	0	0	71.855	0	483.84	430.759	0	19.2	6.741	6.741	6.741	6.741	6.832	0	0	0	0	0	0	0	0	0	503.04	0.003	0	0
DPE	0		0.011	0	7.2	0	0	0	0	0	0	0	0	0	0	0.068	0	0	0	0	0	0	0.001	0.079	0	0	0	0	0	7.2	6.111	1.009	0	0	0	0
PLASTIC	0		0.015	0	0	0	0	0	0	0	0	0	1.361	0	0	0.09	9.6	0	0	0	0	0	0.001	0.106	0	0	0	0	0	9.6	8.149	1.346	0	0	0	0
CMC	0		0	0	0	0	0	0	0	0	0	0	6.877	6.877	0	0	0	0	0	0	0	0	0	0	0	0	0	0	0	0	0	0	0	0	0	0
SODIUM	0		0	0	0	0	0	0	0	0	0	0	0.623	0.623	0	0	0	0	0	0	0	0	0	0	0	0	0	0	0	0	0	0	0	0	0	0
NAILS	3.2		0	3.2	0	0	0	0	0	0	0	0	0	0	3.2	0	0	0	0	0	0	0	0	0	0	0	0	0	0	0	0	0	3.2	0	0	0
Total Average Flow lb/hr	608	0	90.131	3.2	7.2	42	24	1550.4	1507.116	43.284	1.866	0	1000	7.5	608	538.85	9.6	24	3336.741	3336.741	2670.742	175.461	339.834	1998.185	333.001	328.712	50.578	333.001	328.712	16.8	14.26	2.355	632	13197.72	900.015	830.864
Notes	1		1										1		1	1		1	1	1	1	1	1										1	1		
1 - Wood is composed of 20 wt% water, see Assumption 3																																				

13

NO.	DATE	DESCRIPTION	DR	CK	DL	PE	APPD
16		IDS COMMENT REVISIONS	NL	BH	RB	NW	DJ
0	7-2-04	ISSUED FOR DESIGN	JG	BH	RB	NW	DJ

QUALITY ☐ LEVEL 1 ☒ LEVEL 2 ☐ LEVEL 3 ☐ ALL

BECHTEL PARSONS BLUE GRASS
A Joint Venture of Bechtel National, INC. and Parsons Infrastructure & Technology Group Inc.

DOD PROGRAM MANAGER FOR ASSEMBLED CHEMICAL WEAPONS ASSESSMENT EDGEWOOD, MARYLAND

US ARMY ENGINEERING AND SUPPORT CENTER, HUNTSVILLE HUNTSVILLE, ALABAMA

GENERAL ATOMICS

BLUE GRASS CHEMICAL AGENT DESTRUCTION PILOT PLANT PROJECT (BGCAPP)
RICHMOND, KENTUCKY

CONTRACT NO. DAAA09-03-D-0023

DUNNAGE SHREDDING & HANDLING SYSTEM PLASTIC PROCESS FLOW DIAGRAM

PROFESSIONAL STAMP

DRAWING NUMBER 24915-07-M5-DPS-00001 | SHEET 6 OF 9 | REV 1

bgcapp_d3.dwg

GB Campaign (Average Rates)	Rockets	Projectiles	Total
Process Rate (rmd/hr)	24.8	10.9	35.7

Stream Number:	107	114	305	306	307	308	311			313	314	315	316	319	320	
Stream Description	Wood / Dunnage from RSM	Wood / Dunnage from PHS	Wood Flour to Hydropulper	Metals from Magnetic Separator	DPE Suits	Liquid Nitrogen to Cryocooler	Non-process Liquid Waste (Spent Oil) to Hydropulper	Spent Decon Fluid (2.25% Bleach)	Spent Decon Fluid (2.25% Bleach) to Storage	Spent Decon Fluid (2.25% Bleach) to Hydropulper	50% Sodium Hydroxide Feed to Hydropulper	Process Water to Hydropulper	Dunnage Slurry to SCWO	CMC to Hydropulper	Wood Pallet	Wood, Misc Wood, Trash, Debris, Protective Clothing to Storage
Temperature F	68	68	68		68	-300	68	68	68	68	68	68	68	68	68	68
Pressure psi	14.23	14.23	14.23	14.23	14.23	48	14.23	14.23	14.23	14.23	14.23		14.23	14.23	14.23	14.23
Instantaneous Flow lb/hr (ACFM)			1209.7848				240.261			582.60264	27.78144	0				
Density lb/cuft	82.464	82.463	82.539		179.393	47.046	48.212	61.982	61.982	61.982	95.394		69.555	57.289	82.464	82.448
Viscosity cP																
Molecular Weight																
Enthalpy MMBtu/hr	-1.651	-0.483	-0.474		-0.002	-0.005	-0.011	-7.755	-7.464	-0.291	-0.012		-5.912	-0.02	-2.134	-1.754
Mass Flow Liquid, Gas lb/hr																
N2	0	0	0	0	0	31.238	0	0	0	0	0	0	0	0	0	0
O2	0	0	0	0	0	0	0	0	0	0	0	0	0	0	0	0
WATER	62.5	18.28	17.779	0	0	0	0	1127.17	1084.86	42.31	1.032	0	730.98	0	80.78	66.572
NAOH	0	0	0	0	0	0	0	0	0	0	1.032	0	0	0	0	0
NACLO	0	0	0	0	0	0	0	25.94	24.966	0.974	0	0	0.974	0	0	0
C14H28	0	0	0	0	0	0	17.85	0	0	0	0	0	17.85	0	0	0
NACL	0	0	0	0	0	0	0	0	0	0	0	0	40.003	0	0	0
NA2SO4	0	0	0	0	0	0	0	0	0	0	0	0	86.778	0	0	0
CO2	0	0	0	0	0	0	0	0	0	0	0	0	0.714	0	0	0
NANO2	0	0	0	0	0	0	0	0	0	0	0	0	11.213	0	0	0
NANO3	0	0	0	0	0	0	0	0	0	0	0	0	6.025	0	0	0
SODIUM FORMATE	0	0	0	0	0	0	0	0	0	0	0	0	11.715	0	0	0
SODIUM ACETATE	0	0	0	0	0	0	0	0	0	0	0	0	12.218	0	0	0
GLYCEROL	0	0	0	0	0	0	0	0	0	0	0	0	0.92	0	0	0
Mass Flow Solid lb/hr																
WOOD	249.98	73.1	72.071	0	0	0	0	0	0	0	0	0	71.604	0	323.08	265.286
DPE	0	0	0.013	0	5.355	0	0	0	0	0	0	0	0	0	0	0.046
PLASTIC	0	0	0.017	0	0	0	0	0	0	0	0	0	1.505	0	0	0.062
CMC	0	0	0	0	0	0	0	0	0	0	0	0	6.877	6.877	0	0
SODIUM	0	0	0	0	0	0	0	0	0	0	0	0	0.623	0.623	0	0
NAILS	1.65	1.82	0	3.47	0	0	0	0	0	0	0	0	0	0	3.47	0
Total Average Flow lb/hr	314.13	93.2	89.88	3.47	5.355	31.238	17.85	1153.11	1109.826	43.284	2.064	0	999.999	7.5	407.33	331.966
Notes	1	1	1										1		1	1

Stream Number:	321	322	323	324	325	326	327	328	329	330	331	332	333 & 338	335		336	337	339	350	510
Stream Description	Misc Plastic from Non-munition Sources	Misc Wood, Trash, Debris, Protective Clothing	Vent Two Roll Shredder	Vent Hammer Mill	Vent Wood Micronizer Inlet	Vent Wood Micronizer Cyclone	Vent Wood Flour Storage Tank	Vent Plastic / Rubber Granulator	Vent Plastic / Rubber Cyclone	Vent Plastic / Rubber Storage Bin	Nitrogen Vent to Baghouse	CMC Vent	Vent Hydropulper	Total DPE Suits and Misc Plastic from Non-munition Sources	DPE Suits and Misc Plastic from Non-munition Sources to Storage	DPE Suits and Misc Plastic from Non-munition Sources to Hydropulper	Total Wood and Misc Wood, Trash, Debris, Protective Clothing	Vent Gas to Carbon Beds	Total Liquids to Hydropulper	Energetic Hydrolysate Required to Hydropulper
Temperature F	68	68	68	68	68	68	68	68	68	68	51.4	68	68	68	68	68	68	68	118.5	122
Pressure psi	14.23	14.23	14.23	14.23	14.23	14.23	14.23	14.23	14.23	14.23	48	14.23	14.23	14.23	14.23	14.23	14.23	14.23	14.23	14.23
Instantaneous Flow lb/hr (ACFM)																				11263.5837
Density lb/cuft	68.748	82.464	0.072	0.072	0.072	0.074	0.073	0.072	0.072	0.072	0.246	0.072	0.072	93.449	93.449	93.449	82.464	0.072	67.738	68.766
Viscosity cP			0.018	0.018	0.018	0.018	0.018	0.018	0.018	0.018	0.017	0.018	0.018					0.018		
Molecular Weight			28.63	28.63	28.632	28.675	28.659	28.625	28.623	28.632	28.013	28.623	28.632					28.622		
Enthalpy MMBtu/hr	-0.005	-0.094	-0.285	-0.285	-0.233	-0.036	-0.049	-0.157	-0.026	-0.026	0	-0.026	-0.026	-0.007	-0.006	-0.001	-2.228	-1.033	-5.378	-5.064
Mass Flow Liquid, Gas lb/hr																				
N2	0	0	2520.377	2520.377	2016.302	127.699	252.038	1512.226	252.038	247.749	39.816	252.038	247.749	0	0	0	0	9988.407	0	0
O2	0	0	765.667	765.667	612.534	38.794	76.567	459.4	76.567	76.567	0	76.567	76.567	0	0	0	0	3024.895	0	0
WATER	0	3.57	43.956	43.956	35.165	2.227	4.395	26.374	4.396	4.396	0	4.396	4.396	0	0	0	84.35	173.655	712.797	669.455
NAOH	0	0	0	0	0	0	0	0	0	0	0	0	0	0	0	0	0	0	1.032	0
NACLO	0	0	0	0	0	0	0	0	0	0	0	0	0	0	0	0	0	0	0.974	0
C14H28	0	0	0	0	0	0	0	0	0	0	0	0	0	0	0	0	0	0	17.85	0
NACL	0	0	0	0	0	0	0	0	0	0	0	0	0	0	0	0	0	0	38.494	38.494
NA2SO4	0	0	0	0	0	0	0	0	0	0	0	0	0	0	0	0	0	0	86.778	86.778
CO2	0	0	0	0	0	0	0	0	0	0	0	0	0	0	0	0	0	0	0	0
NANO2	0	0	0	0	0	0	0	0	0	0	0	0	0	0	0	0	0	0	11.213	11.213
NANO3	0	0	0	0	0	0	0	0	0	0	0	0	0	0	0	0	0	0	6.025	6.025
SODIUM FORMATE	0	0	0	0	0	0	0	0	0	0	0	0	0	0	0	0	0	0	11.715	11.715
SODIUM ACETATE	0	0	0	0	0	0	0	0	0	0	0	0	0	0	0	0	0	0	12.218	12.218
GLYCEROL	0	0	0	0	0	0	0	0	0	0	0	0	0	0	0	0	0	0	0.921	0.921
Mass Flow Solid lb/hr																				
WOOD	0	14.28	4.521	4.521	4.521	4.521	4.582	0	0	0	0	0	0	0	0	0	337.36	0.002	0	0
DPE	0	0	0	0	0	0	0.001	0.059	0	0	0	0	0	5.355	4.18	1.116	0	0	0	0
PLASTIC	7.14	0	0	0	0	0	0.001	0.079	0	0	0	0	0	7.14	5.573	1.488	0	0	0	0
CMC	0	0	0	0	0	0	0	0	0	0	0	0	0	0	0	0	0	0	0	0
SODIUM	0	0	0	0	0	0	0	0	0	0	0	0	0	0	0	0	0	0	0	0
NAILS	0	0	0	0	0	0	0	0	0	0	0	0	0	0	0	0	3.47	0	0	0
Total Average Flow lb/hr	7.14	17.85	3334.521	3334.521	2668.522	173.241	337.584	1998.138	333.001	328.712	39.816	333.001	328.712	12.495	9.753	2.604	425.18	13186.96	900.017	836.819
Notes	1	1	1	1	1	1	1										1	1		

1 - Wood is composed of 20 wt% water, see Assumption 3

NO.	DATE	DESCRIPTION	DR	CK	DL	PE	APPD
1		IDS COMMENT REVISIONS	NL	BH	RB	NW	DJ
0	7-2-04	ISSUED FOR DESIGN	JG	BH	RB	NW	DJ

QUALITY ☐ LEVEL 1 ☒ LEVEL 2 ☐ LEVEL 3 ☐ ALL

BECHTEL PARSONS BLUE GRASS
A Joint Venture of Bechtel National, INC. and Parsons Infrastructure & Technology Group Inc.

DOD PROGRAM MANAGER FOR ASSEMBLED CHEMICAL WEAPONS ASSESSMENT EDGEWOOD, MARYLAND

US ARMY ENGINEERING AND SUPPORT CENTER, HUNTSVILLE HUNTSVILLE, ALABAMA

GENERAL ATOMICS

BLUE GRASS CHEMICAL AGENT DESTRUCTION PILOT PLANT PROJECT (BGCAPP)
RICHMOND, KENTUCKY

CONTRACT NO. DAAA09-03-D-0023

DUNNAGE SHREDDING & HANDLING SYSTEM
PLASTIC
PROCESS FLOW DIAGRAM

PROFESSIONAL STAMP

DRAWING NUMBER 24915-07-M5-DPS-00001 | SHEET 7 OF 9 | REV 1

bgcapp_d3.dwg

VX Campaign (Average Rates)	Rockets	Projectiles	Total
Process Rate (md/hr)	29.8	19	48.8

Stream Number:	107	114	305	306	307	308	311			313	314	315	316	319	320		321	322	323	324	325	326	327	328	329	330	331	332	333 & 338	335		336	337	339	350	510
Stream Description	Wood / Dunnage from RSM	Wood / Dunnage from PHS	Wood Flour to Hydropulper	Metals from Magnetic Separator	DPE Suits	Liquid Nitrogen to Cryocooler	Non-process Liquid Waste (Spent Oil) to Hydropulper	Spent Decon Fluid (2.25% Bleach)	Spent Decon Fluid (2.25% Bleach) to Storage	Spent Decon Fluid (2.25% Bleach) to Hydropulper	50% Sodium Hydroxide Feed to Hydropulper	Process Water to Hydropulper	Dunnage Slurry to SCWO	CMC to Hydropulper	Wood Pallet	Wood, Misc Wood, Trash, Debris, Protective Clothing to Storage	Misc Plastic from Non-munition Sources	Misc Wood, Trash, Debris, Protective Clothing	Vent Two Roll Shredder	Vent Hammer Mill	Vent Wood Micronizer Inlet	Vent Wood Micronizer Cyclone	Vent Wood Flour Storage Tank	Vent Plastic / Rubber Granulator	Vent Plastic / Rubber Cyclone	Vent Plastic / Rubber Storage Bin	Nitrogen Vent to Baghouse	CMC Vent	Vent Hydropulper	Total DPE Suits and Misc Plastic from Non-munition Sources	DPE Suits and Misc Plastic from Non-munition Sources to Storage	DPE Suits and Misc Plastic from Non-munition Sources to Hydropulper	Total Wood and Misc Wood, Trash, Debris, Protective Clothing	Vent Gas to Carbon Beds	Total Liquids to Hydropulper	Energetic Hydrolysate Required to Hydropulper
Temperature F	68	68	68		68	-300	68	68	68	68	68	68	68	68	68	68	68	68	68	68	68	68	68	68	68	68	44.9	68	68	68	68	68	68	68	118.3	122
Pressure psi	14.23	14.23	14.23	14.23	14.23	48	14.23	14.23	14.23	14.23	14.23		14.23	14.23	14.23	14.23	14.23	14.23	14.23	14.23	14.23	14.23	14.23	14.23	14.23	14.23	48	14.23	14.23	14.23	14.23	14.23	14.23	14.23	14.23	14.23
Instantaneous Flow lb/hr (ACFM)			1202.86636				328.424			582.60264	33.19236	0																								11170.0771
Density lb/cuft	82.464	82.464	82.541		179.393	47.046	48.212	61.982	61.982	61.982	95.394		69.335	57.289	82.464	82.453	68.748	82.464	0.072	0.072	0.072	0.075	0.073	0.072	0.072	0.072	0.249	0.072	0.072	93.449	93.449	93.449	82.464	0.072	67.487	68.766
Viscosity cP																			0.018	0.018	0.018	0.018	0.018	0.018	0.018	0.018	0.017	0.018	0.018					0.018		
Molecular Weight																			28.631	28.631	28.633	28.679	28.662	28.626	28.623	28.632	28.013	28.623	28.632					28.621		
Enthalpy MMBtu/hr	-1.984	-0.422	-0.472		-0.002	-0.007	-0.015	-10.601	-10.31	-0.291	-0.014		-5.874	-0.02	-2.405	-2.063	-0.007	-0.129	-0.288	-0.288	-0.236	-0.039	-0.052	-0.157	-0.026	-0.026	0	-0.026	-0.026	-0.01	-0.008	-0.002	-2.534	-1.033	-5.342	-5.022
Mass Flow Liquid, Gas lb/hr																																				
N2	0	0	0	0	0	42.7	0	0	0	0	0	0	0	0	0	0	0	0	2520.377	2520.377	2016.302	127.699	252.038	1512.226	252.038	247.749	51.278	252.038	247.749	0	0	0	0	9999.87	0	0
O2	0	0	0	0	0	0	0	0	0	0	0	0	0	0	0	0	0	0	765.667	765.667	612.534	38.794	76.567	459.4	76.567	76.567	0	76.567	76.567	0	0	0	0	3024.895	0	0
WATER	75.1	15.96	17.675	0	0	0	0	1540.77	1498.46	42.31	1.233	0	725.599	0	91.06	78.265	0	4.88	43.956	43.956	35.165	2.227	4.395	26.374	4.396	4.396	0	4.396	4.396	0	0	0	95.94	173.655	707.44	663.898
NAOH	0	0	0	0	0	0	0	0	0	0	1.233	0	0	0	0	0	0	0	0	0	0	0	0	0	0	0	0	0	0	0	0	0	0	0	1.233	0
NACLO	0	0	0	0	0	0	0	35.47	34.496	0.974	0	0	0.974	0	0	0	0	0	0	0	0	0	0	0	0	0	0	0	0	0	0	0	0	0	0.974	0
C14H28	0	0	0	0	0	0	24.4	0	0	0	0	0	24.4	0	0	0	0	0	0	0	0	0	0	0	0	0	0	0	0	0	0	0	0	0	24.4	0
NACL	0	0	0	0	0	0	0	0	0	0	0	0	39.977	0	0	0	0	0	0	0	0	0	0	0	0	0	0	0	0	0	0	0	0	0	38.174	38.174
NA2SO4	0	0	0	0	0	0	0	0	0	0	0	0	86.058	0	0	0	0	0	0	0	0	0	0	0	0	0	0	0	0	0	0	0	0	0	86.058	86.058
CO2	0	0	0	0	0	0	0	0	0	0	0	0	0.853	0	0	0	0	0	0	0	0	0	0	0	0	0	0	0	0	0	0	0	0	0	0	0
NANO2	0	0	0	0	0	0	0	0	0	0	0	0	11.12	0	0	0	0	0	0	0	0	0	0	0	0	0	0	0	0	0	0	0	0	0	11.12	11.12
NANO3	0	0	0	0	0	0	0	0	0	0	0	0	5.975	0	0	0	0	0	0	0	0	0	0	0	0	0	0	0	0	0	0	0	0	0	5.975	5.975
SODIUM FORMATE	0	0	0	0	0	0	0	0	0	0	0	0	11.618	0	0	0	0	0	0	0	0	0	0	0	0	0	0	0	0	0	0	0	0	0	11.618	11.618
SODIUM ACETATE	0	0	0	0	0	0	0	0	0	0	0	0	12.116	0	0	0	0	0	0	0	0	0	0	0	0	0	0	0	0	0	0	0	0	0	12.116	12.116
GLYCEROL	0	0	0	0	0	0	0	0	0	0	0	0	0.913	0	0	0	0	0	0	0	0	0	0	0	0	0	0	0	0	0	0	0	0	0	0.913	0.913
Mass Flow Solid lb/hr																																				
WOOD	300.38	63.84	71.656	0	0	0	0	0	0	0	0	0	71.098	0	364.22	312.081	0	19.52	5.142	5.142	5.142	5.142	5.212	0	0	0	0	0	0	0	0	0	383.74	0.003	0	0
DPE	0	0	0.015	0	7.32	0	0	0	0	0	0	0	0	0	0	0.066	0	0	0	0	0	0	0.001	0.081	0	0	0	0	0	7.32	5.906	1.334	0	0	0	0
PLASTIC	0	0	0.02	0	0	0	0	0	0	0	0	0	1.798	0	0	0.087	9.76	0	0	0	0	0	0.001	0.107	0	0	0	0	0	9.76	7.874	1.778	0	0	0	0
CMC	0	0	0	0	0	0	0	0	0	0	0	0	6.877	6.877	0	0	0	0	0	0	0	0	0	0	0	0	0	0	0	0	0	0	0	0	0	0
SODIUM	0	0	0	0	0	0	0	0	0	0	0	0	0.623	0.623	0	0	0	0	0	0	0	0	0	0	0	0	0	0	0	0	0	0	0	0	0	0
NAILS	1.99	2.38	0	4.37	0	0	0	0	0	0	0	0	0	0	4.37	0	0	0	0	0	0	0	0	0	0	0	0	0	0	0	0	0	4.37	0	0	0
Total Average Flow lb/hr	377.47	82.18	89.366	4.37	7.32	42.7	24.4	1576.24	1532.956	43.284	2.466	0	999.999	7.5	459.65	390.499	9.76	24.4	3335.142	3335.142	2669.143	173.862	338.214	1998.188	333.001	328.712	51.278	333.001	328.712	17.08	13.78	3.112	484.05	13198.42	900.021	829.872
Notes	1	1	1										1		1	1	1	1	1	1	1	1	1										1	1		

1 - Wood is composed of 20 wt% water, see Assumption 3

15

NO.	DATE	DESCRIPTION	DR	CK	DL	PE	APPD
6		IDS COMMENT REVISIONS	NL	BH	RB	NW	DJ
0	7-2-04	ISSUED FOR DESIGN	JG	BH	RB	NW	DJ

QUALITY ☐ LEVEL 1 ☒ LEVEL 2 ☐ LEVEL 3 ☐ ALL

BECHTEL PARSONS BLUE GRASS
A Joint Venture of Bechtel National, INC. and Parsons Infrastructure & Technology Group Inc.

DOD PROGRAM MANAGER FOR ASSEMBLED CHEMICAL WEAPONS ASSESSMENT EDGEWOOD, MARYLAND

US ARMY ENGINEERING AND SUPPORT CENTER, HUNTSVILLE HUNTSVILLE, ALABAMA

GENERAL ATOMICS

BLUE GRASS CHEMICAL AGENT DESTRUCTION PILOT PLANT PROJECT (BGCAPP)
RICHMOND, KENTUCKY

CONTRACT NO. DAAA09-03-D-0023

DUNNAGE SHREDDING & HANDLING SYSTEM
PLASTIC
PROCESS FLOW DIAGRAM

PROFESSIONAL STAMP

DRAWING NUMBER 24915-07-M5-DPS-00001 | SHEET 8 OF 9 | REV 1

bgcapp_d3.dwg

H Campaign (Average Rates)	Total
Process Rate (md/hr)	17.1

Stream Number:	107	114	305	306	307	308	311			313	314	315	316	319	320		321	322	323	324	325	326	327	328	329	330	331	332	333 & 338	335		336	337	339	350	510
Stream Description	Wood / Dunnage from RSM	Wood / Dunnage from PHS	Wood Flour to Hydropulper	Metals from Magnetic Separator	DPE Suits	Liquid Nitrogen to Cryocooler	Non-process Liquid Waste (Spent Oil) to Hydropulper	Spent Decon Fluid (2.25% Bleach)	Spent Decon Fluid (2.25% Bleach) to Storage	Spent Decon Fluid (2.25% Bleach) to Hydropulper	50% Sodium Hydroxide Feed to Hydropulper	Process Water to Hydropulper	Dunnage Slurry to SCWO	CMC to Hydropulper	Wood Pallet	Wood, Misc Wood, Trash, Debris, Protective Clothing to Storage	Misc Plastic from Non-munition Sources	Misc Wood, Trash, Debris, Protective Clothing	Vent Two Roll Shredder	Vent Hammer Mill	Vent Wood Micronizer Inlet	Vent Wood Micronizer Cyclone	Vent Wood Flour Storage Tank	Vent Plastic / Rubber Granulator	Vent Plastic / Rubber Cyclone	Vent Plastic / Rubber Storage Bin	Nitrogen Vent to Baghouse	CMC Vent	Vent Hydropulper	Total DPE Suits and Misc Plastic from Non-munition Sources	DPE Suits and Misc Plastic from Non-munition Sources to Storage	DPE Suits and Misc Plastic from Non-munition Sources to Hydropulper	Total Wood and Misc Wood, Trash, Debris, Protective Clothing	Vent Gas to Carbon Beds	Total Liquids to Hydropulper	Energetic Hydrolysate Required to Hydropulper
Temperature F		68	68		68	-300	68	68	68	68	68	68	68	68	68	68	68	68	68	68	68	68	68	68	68	68	60	68	68	68		68	68	68	116.6	122
Pressure psi		14.23	14.23	14.23	14.23	48	14.23	14.23	14.23	14.23	14.23		14.23	14.23	14.23	14.23	14.23	14.23	14.23	14.23	14.23	14.23	14.23	14.23	14.23	14.23	48	14.23	14.23	14.23		14.23	14.23	14.23	14.23	14.23
Instantaneous Flow lb/hr (ACFM)			1082.66856				115.083			1150.83	63.1274	0																								10867.6848
Density lb/cuft		82.466	82.476		179.393	47.046	48.212	61.982	61.982	61.982	95.394		66.928	57.289	82.466	62.324	68.748	82.464	0.072	0.072	0.072	0.072	0.072	0.072	0.072	0.072	0.241	0.072	0.072	93.449		93.449	82.466	0.072	65.241	65.727
Viscosity cP																			0.018	0.018	0.018	0.018	0.018	0.018	0.018	0.018	0.017	0.018	0.018					0.018		
Molecular Weight																			28.625	28.625	28.625	28.642	28.635	28.624	28.623	28.632	28.013	28.623	28.632					28.623		
Enthalpy MMBtu/hr		-0.379	-0.425		-0.001	-0.003	-0.005	-3.715	-3.14	-0.575	-0.028		-6.208	-0.02	-0.379	0	-0.003	-0.045	-0.266	-0.266	-0.214	-0.018	-0.031	-0.157	-0.026	-0.026	0	-0.026	-0.026	-0.003		-0.003	-0.425	-1.033	-5.718	-5.11
Mass Flow Liquid, Gas lb/hr																																				
N2		0	0	0	0	14.963	0	0	0	0	0	0	0	0	0	0	0	0	2520.377	2520.377	2016.302	127.699	252.038	1512.226	252.038	247.749	23.541	252.038	247.749	0	0	0	0	9972.132	0	0
O2		0	0	0	0	0	0	0	0	0	0	0	0	0	0	0	0	0	765.667	765.667	612.534	38.794	76.567	459.4	76.567	76.567	0	76.567	76.567	0	0	0	0	3024.895	0	0
WATER		14.36	16.07	0	0	0	0	539.9	456.324	83.576	2.345	0	809.31	0	14.36	0.001	0	1.71	43.956	43.956	35.165	2.227	4.395	26.374	4.396	4.396	0	4.396	4.396	0	0	0	16.07	173.655	792.32	706.4
NAOH		0	0	0	0	0	0	0	0	0	2.345	0	0	0	0	0	0	0	0	0	0	0	0	0	0	0	0	0	0	0	0	0	0	0	2.345	0
NACLO		0	0	0	0	0	0	12.43	10.506	1.924	0	0	1.924	0	0	0	0	0	0	0	0	0	0	0	0	0	0	0	0	0	0	0	0	0	1.924	0
C14H28		0	0	0	0	0	8.55	0	0	0	0	0	8.55	0	0	0	0	0	0	0	0	0	0	0	0	0	0	0	0	0	0	0	0	0	8.55	0
NACL		0	0	0	0	0	0	0	0	0	0	0	27.974	0	0	0	0	0	0	0	0	0	0	0	0	0	0	0	0	0	0	0	0	0	24.545	24.545
NA2SO4		0	0	0	0	0	0	0	0	0	0	0	55.549	0	0	0	0	0	0	0	0	0	0	0	0	0	0	0	0	0	0	0	0	0	55.55	55.55
CO2		0	0	0	0	0	0	0	0	0	0	0	1.623	0	0	0	0	0	0	0	0	0	0	0	0	0	0	0	0	0	0	0	0	0	0	0
NANO2		0	0	0	0	0	0	0	0	0	0	0	4.521	0	0	0	0	0	0	0	0	0	0	0	0	0	0	0	0	0	0	0	0	0	4.521	4.521
NANO3		0	0	0	0	0	0	0	0	0	0	0	0	0	0	0	0	0	0	0	0	0	0	0	0	0	0	0	0	0	0	0	0	0	0	0
SODIUM FORMATE		0	0	0	0	0	0	0	0	0	0	0	15.502	0	0	0	0	0	0	0	0	0	0	0	0	0	0	0	0	0	0	0	0	0	15.502	15.502
SODIUM ACETATE		0	0	0	0	0	0	0	0	0	0	0	0.888	0	0	0	0	0	0	0	0	0	0	0	0	0	0	0	0	0	0	0	0	0	0.888	0.888
GLYCEROL		0	0	0	0	0	0	0	0	0	0	0	0	0	0	0	0	0	0	0	0	0	0	0	0	0	0	0	0	0	0	0	0	0	0	0
Mass Flow Solid lb/hr																																				
WOOD		57.46	64.3	0	0	0	0	0	0	0	0	0	63.238	0	57.46	0	0	6.84	0.862	0.862	0.862	0.862	0.862	0	0	0	0	0	0	0	0	64.3	0	0	0
DPE		0	0.028	0	2.565	0	0	0	0	0	0	0	0	0	0	0	0	0	0	0	0	0	0	0.028	0	0	0	0	0	2.565	0	2.537	0	0	0	0
PLASTIC		0	0.038	0	0	0	0	0	0	0	0	0	3.42	0	0	0	3.42	0	0	0	0	0	0	0.038	0	0	0	0	0	3.42	0	3.382	0	0	0	0
CMC		0	0	0	0	0	0	0	0	0	0	0	6.877	6.877	0	0	0	0	0	0	0	0	0	0	0	0	0	0	0	0	0	0	0	0	0	0
SODIUM		0	0	0	0	0	0	0	0	0	0	0	0.623	0.623	0	0	0	0	0	0	0	0	0	0	0	0	0	0	0	0	0	0	0	0	0	0
NAILS		2.14	0	2.14	0	0	0	0	0	0	0	0	0	0	2.14	0	0	0	0	0	0	0	0	0	0	0	0	0	0	0	0	0	2.14	0	0	0
Total Average Flow lb/hr	0	73.96	80.436	2.14	2.565	14.963	8.55	552.33	466.83	85.5	4.69	0	999.999	7.5	73.96	0.001	3.42	8.55	3330.862	3330.862	2664.863	169.582	333.862	1998.066	333.001	328.712	23.541	333.001	328.712	5.985	0	5.919	82.51	13170.68	906.145	807.406
Notes		1	1										1		1	1	1	1	1	1	1	1	1										1	1			

1 - Wood is composed of 20 wt% water, see Assumption 3

16

NO.	DATE	DESCRIPTION	DR	CK	DL	PE	APPD
16		IDS COMMENT REVISIONS	NL	BH	RB	NW	DJ
0	7-2-04	ISSUED FOR DESIGN	JG	BH	RB	NW	DJ

QUALITY ☐ LEVEL 1 ☒ LEVEL 2 ☐ LEVEL 3 ☐ ALL

BECHTEL PARSONS BLUE GRASS
A Joint Venture of Bechtel National, INC. and Parsons Infrastructure & Technology Group Inc.

DOD PROGRAM MANAGER FOR ASSEMBLED CHEMICAL WEAPONS ASSESSMENT EDGEWOOD, MARYLAND

US ARMY ENGINEERING AND SUPPORT CENTER, HUNTSVILLE HUNTSVILLE, ALABAMA

GENERAL ATOMICS

BLUE GRASS CHEMICAL AGENT DESTRUCTION PILOT PLANT PROJECT (BGCAPP)
RICHMOND, KENTUCKY

CONTRACT NO. DAAA09-03-D-0023

DUNNAGE SHREDDING & HANDLING SYSTEM PLASTIC PROCESS FLOW DIAGRAM

DRAWING NUMBER 24915-07-M5-DPS-00001 | SHEET 9 OF 9 | REV 1

PROFESSIONAL STAMP

bgcapp_d3.dwg

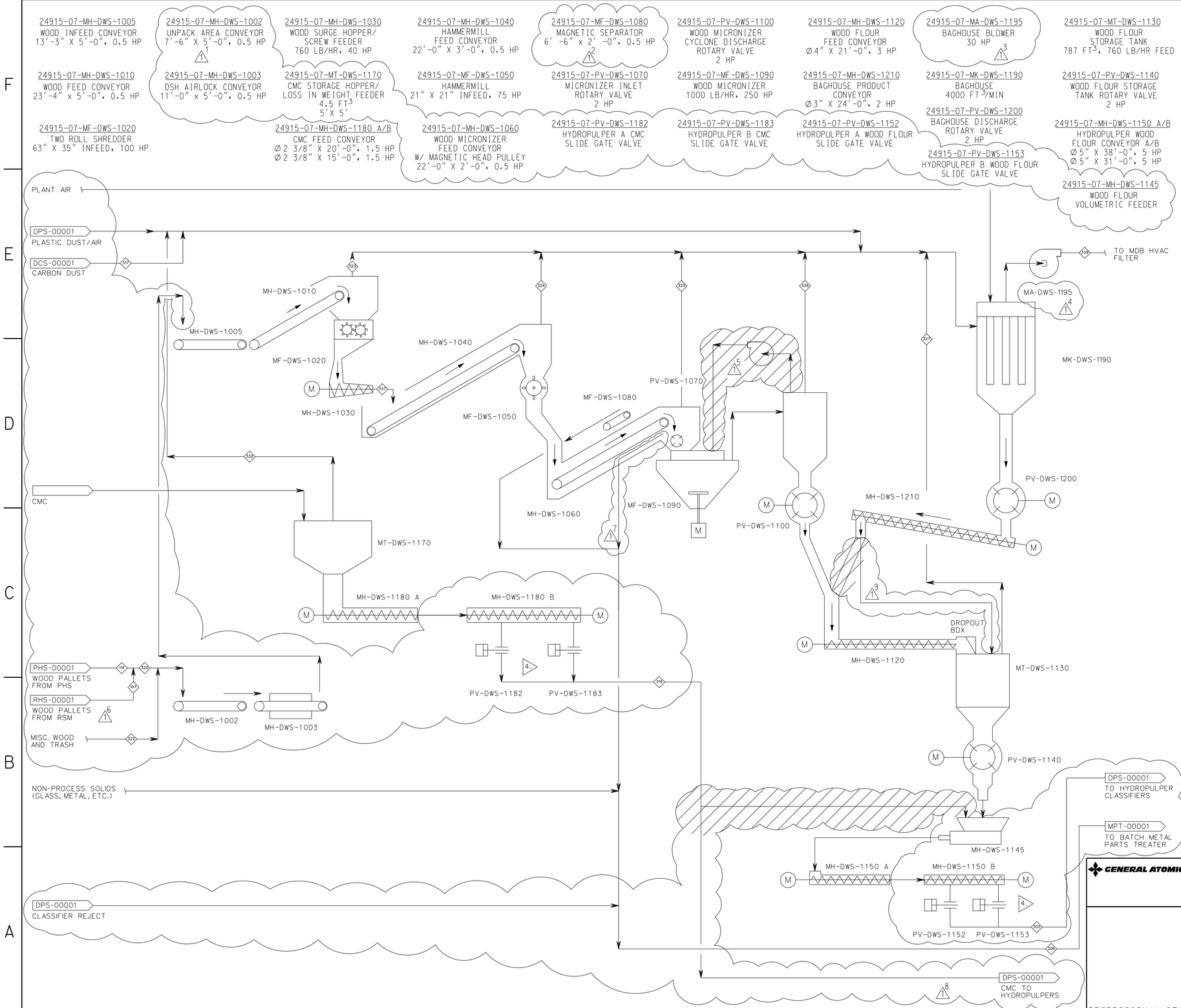

NOTES:

1. ALL INFORMATION, CALCULATIONS, AND ASSUMPTIONS USED IN THE DETERMINATION OF STREAM DATA MAY BE FOUND IN THE "MASS AND ENERGY BALANCE FOR THE DUNNAGE SHREDDING & HANDLING (DSH) SYSTEM - BGCAPP" GA DOCUMENT NO. 24915-07-M4-DWS-00001
2. ◇xxx REPRESENTS M & EB STREAM NUMBERS.
3. DUE TO A CHANGE IN LOCATOR CODE NOMENCLATURE, THIS DRAWING SUPERCEDES DWG 24915-07-M5-HHDW-0001.
4. SCREW CONVEYOR HAS DUAL SLIDE GATE VALVES ATTACHED TO HOUSING. SLIDE GATE VALUES ALTERNATE TO BATCH FILL ONLY ONE CLASSIFIER/HYDROPULPER AT A TIME.

Signature Valid
cn=Blayne Monen, o=Issued, ou=Configuration Management, c=US
2004.11.10 13:42:25 -08'00'

NO.	DATE	DESCRIPTION	DR	CK	DL	PE	APPD
1		IDS COMMENT REVISIONS	NL	BH	RB	NW	DJ
0	7-2-04	ISSUED FOR DESIGN	NL	BH	RB	NW	DJ

QUALITY ☐ LEVEL 1 ☒ LEVEL 2 ☐ LEVEL 3 ☐ ALL

BECHTEL PARSONS BLUE GRASS
A Joint Venture of Bechtel National, INC. and Parsons Infrastructure & Technology Group Inc.

DOD PROGRAM MANAGER FOR ASSEMBLED CHEMICAL WEAPONS ASSESSMENT EDGEWOOD, MARYLAND

US ARMY ENGINEERING AND SUPPORT CENTER, HUNTSVILLE HUNTSVILLE, ALABAMA

GENERAL ATOMICS

BLUE GRASS CHEMICAL AGENT DESTRUCTION PILOT PLANT PROJECT (BGCAPP)
RICHMOND, KENTUCKY

CONTRACT NO. DAAA09-03-D-0023

DUNNAGE SHREDDING & HANDLING SYSTEM
WOOD
PROCESS FLOW DIAGRAM

DRAWING NUMBER 24915-07-M5-DWS-00001
SHEET 1 OF 9
REV 1

PROFESSIONAL STAMP

BGCAPP_D3.BDR

GB Campaign (Peak Rates)	Rockets	Projectiles	Total
Process Rate (rnd/hr)	40	15	55

Stream Number:	107	114	305	306	307	308	311			313	314	315	316	319	320	
Stream Description	Wood / Dunnage from RSM	Wood / Dunnage from PHS	Wood Flour to Hydropulper	Metals from Magnetic Separator	DPE Suits	Liquid Nitrogen to Cryocooler	Non-process Liquid Waste (Spent Oil) to Hydropulper	Spent Decon Fluid (2.25% Bleach)	Spent Decon Fluid (2.25% Bleach) to Storage	Spent Decon Fluid (2.25% Bleach) to Hydropulper	50% Sodium Hydroxide Feed to Hydropulper	Process Water to Hydropulper	Dunnage Slurry to SCWO	CMC to Hydropulper	Wood Pallet	Wood, Misc Wood, Trash, Debris, Protective Clothing to Storage
Temperature F	68	68	68		68	-300	68	68	68	68	68	68	68	68	68	68
Pressure psi	14.23	14.23	14.23	14.23	14.23	48	14.23	14.23	14.23	14.23	14.23		14.23	14.23	14.23	14.23
Instantaneous Flow lb/hr (ACFM)			1210.17514				370.15			582.60264	27.4584	0				
Density lb/cuft	82.464	82.464	82.54		179.393	47.046	48.212	61.982	61.982	61.982	95.394		69.237	57.289	82.464	82.457
Viscosity cP																
Molecular Weight																
Enthalpy MMBtu/hr	-2.663	-0.664	-0.474		-0.002	-0.008	-0.017	-11.948	-11.657	-0.291	-0.012		-5.859	-0.02	-3.327	-2.998
Mass Flow Liquid, Gas lb/hr																
N2	0	0	0	0	0	48.125	0	0	0	0	0	0	0	0	0	0
O2	0	0	0	0	0	0	0	0	0	0	0	0	0	0	0	0
WATER	100.8	25.15	17.783	0	0	0	0	1736.53	1694.22	42.31	1.02	0	723.267	0	125.95	113.668
NAOH	0	0	0	0	0	0	0	0	0	0	1.02	0	0	0	0	0
NACLO	0	0	0	0	0	0	0	39.97	38.996	0.974	0	0	0.974	0	0	0
C14H28	0	0	0	0	0	0	27.5	0	0	0	0	0	27.5	0	0	0
NACL	0	0	0	0	0	0	0	0	0	0	0	0	39.543	0	0	0
NA2SO4	0	0	0	0	0	0	0	0	0	0	0	0	85.78	0	0	0
CO2	0	0	0	0	0	0	0	0	0	0	0	0	0.706	0	0	0
NANO2	0	0	0	0	0	0	0	0	0	0	0	0	11.084	0	0	0
NANO3	0	0	0	0	0	0	0	0	0	0	0	0	5.956	0	0	0
SODIUM FORMATE	0	0	0	0	0	0	0	0	0	0	0	0	11.581	0	0	0
SODIUM ACETATE	0	0	0	0	0	0	0	0	0	0	0	0	12.077	0	0	0
GLYCEROL	0	0	0	0	0	0	0	0	0	0	0	0	0.91	0	0	0
Mass Flow Solid lb/hr																
WOOD	403.2	100.6	72.097	0	0	0	0	0	0	0	0	0	71.635	0	503.8	453.7
DPE	0	0	0.012	0	8.25	0	0	0	0	0	0	0	0	0	0	0.078
PLASTIC	0	0	0.017	0	0	0	0	0	0	0	0	0	1.488	0	0	0.104
CMC	0	0	0	0	0	0	0	0	0	0	0	0	6.877	6.877	0	0
SODIUM	0	0	0	0	0	0	0	0	0	0	0	0	0.623	0.623	0	0
NAILS	2.67	2.5	0	5.17	0	0	0	0	0	0	0	0	0	0	5.17	0
Total Average Flow lb/hr	506.67	128.25	89.909	5.17	8.25	48.125	27.5	1776.5	1733.216	43.284	2.04	0	1000.001	7.5	634.92	567.55
Notes	1	1	1										1		1	1

1 - Wood is composed of 20 wt% water, see Assumption 3

Stream Number:	321	322	323	324	325	326	327	328	329	330	331	332	333 & 338	335		336	337	339	350	510
Stream Description	Misc Plastic from Non-munition Sources	Misc Wood, Trash, Debris, Protective Clothing	Vent Two Roll Shredder	Vent Hammer Mill	Vent Wood Micronizer Inlet	Vent Wood Micronizer Cyclone	Vent Wood Flour Storage Tank	Vent Plastic / Rubber Granulator	Vent Plastic / Rubber Cyclone	Vent Plastic / Rubber Storage Bin	Nitrogen Vent to Baghouse	CMC Vent	Vent Hydropulper	Total DPE Suits and Misc Plastic from Non-munition Sources	DPE Suits and Misc Plastic from Non-munition Sources to Storage	DPE Suits and Misc Plastic from Non-munition Sources to Hydropulper	Total Wood and Misc Wood, Trash, Debris, Protective Clothing	Vent Gas to Carbon Beds	Total Liquids to Hydropulper	Energetic Hydrolysate Required to Hydropulper
Temperature F	68	68	68	68	68	68	68	68	68	68	41.7	68	68	68	68	68	68	68	118.1	122
Pressure psi	14.23	14.23	14.23	14.23	14.23	14.23	14.23	14.23	14.23	14.23	48	14.23	14.23	14.23	14.23	14.23	14.23	14.23	14.23	14.23
Instantaneous Flow lb/hr (ACFM)																				11134.0043
Density lb/cuft	68.748	82.464	0.072	0.072	0.072	0.075	0.074	0.072	0.072	0.072	0.25	0.072	0.072	93.449	93.449	93.449	82.464	0.072	67.353	68.766
Viscosity cP			0.018	0.018	0.018	0.018	0.018	0.018	0.018	0.018	0.017	0.018	0.018					0.018		
Molecular Weight			28.633	28.633	28.635	28.688	28.669	28.626	28.623	28.632	28.013	28.623	28.632					28.621		
Enthalpy MMBtu/hr	-0.008	-0.145	-0.298	-0.298	-0.246	-0.048	-0.062	-0.157	-0.026	-0.026	-0.001	-0.026	-0.026	-0.011	-0.009	-0.001	-3.472	-1.033	-5.326	-5.006
Mass Flow Liquid, Gas lb/hr																				
N2	0	0	2520.377	2520.377	2016.302	127.699	252.038	1512.226	252.038	247.749	56.703	252.038	247.749	0	0	0	0	10005.3	0	0
O2	0	0	765.667	765.667	612.534	38.794	76.567	459.4	76.567	76.567	0	76.567	76.567	0	0	0	0	3024.895	0	0
WATER	0	5.5	43.956	43.956	35.165	2.227	4.395	26.374	4.396	4.396	0	4.396	4.396	0	0	0	131.45	173.655	705.083	661.753
NAOH	0	0	0	0	0	0	0	0	0	0	0	0	0	0	0	0	0	0	1.02	0
NACLO	0	0	0	0	0	0	0	0	0	0	0	0	0	0	0	0	0	0	0.974	0
C14H28	0	0	0	0	0	0	0	0	0	0	0	0	0	0	0	0	0	0	27.5	0
NACL	0	0	0	0	0	0	0	0	0	0	0	0	0	0	0	0	0	0	38.051	38.051
NA2SO4	0	0	0	0	0	0	0	0	0	0	0	0	0	0	0	0	0	0	85.78	85.78
CO2	0	0	0	0	0	0	0	0	0	0	0	0	0	0	0	0	0	0	0	0
NANO2	0	0	0	0	0	0	0	0	0	0	0	0	0	0	0	0	0	0	11.084	11.084
NANO3	0	0	0	0	0	0	0	0	0	0	0	0	0	0	0	0	0	0	5.956	5.956
SODIUM FORMATE	0	0	0	0	0	0	0	0	0	0	0	0	0	0	0	0	0	0	11.581	11.581
SODIUM ACETATE	0	0	0	0	0	0	0	0	0	0	0	0	0	0	0	0	0	0	12.077	12.077
GLYCEROL	0	0	0	0	0	0	0	0	0	0	0	0	0	0	0	0	0	0	0.91	0.91
Mass Flow Solid lb/hr																				
WOOD	0	22	7.046	7.046	7.046	7.046	7.141	0	0	0	0	0	0	0	0	0	525.8	0.004	0	0
DPE	0	0	0	0	0	0	0.001	0.091	0	0	0	0	0	8.25	7.055	1.104	0	0	0	0
PLASTIC	11	0	0	0	0	0	0.001	0.121	0	0	0	0	0	11	9.407	1.472	0	0	0	0
CMC	0	0	0	0	0	0	0	0	0	0	0	0	0	0	0	0	0	0	0	0
SODIUM	0	0	0	0	0	0	0	0	0	0	0	0	0	0	0	0	0	0	0	0
NAILS	0	0	0	0	0	0	0	0	0	0	0	0	0	0	0	0	5.17	0	0	0
Total Average Flow lb/hr	11	27.5	3337.046	3337.046	2671.047	175.766	340.143	1998.212	333.001	328.712	56.703	333.001	328.712	19.25	16.462	2.576	662.42	13203.85	900.016	827.192
Notes	1	1	1	1	1	1	1										1	1		

NO.	DATE	DESCRIPTION	DR	CK	DL	PE	APPD
1		IDS COMMENT REVISIONS	NL	BH	RB	NW	DJ
0	7-2-04	ISSUED FOR DESIGN	JG	BH	RB	NW	DJ

QUALITY ☐ LEVEL 1 ☒ LEVEL 2 ☐ LEVEL 3 ☐ ALL

BECHTEL PARSONS BLUE GRASS
A Joint Venture of Bechtel National, INC. and Parsons Infrastructure & Technology Group Inc.

DOD PROGRAM MANAGER FOR ASSEMBLED CHEMICAL WEAPONS ASSESSMENT EDGEWOOD, MARYLAND

US ARMY ENGINEERING AND SUPPORT CENTER, HUNTSVILLE HUNTSVILLE, ALABAMA

GENERAL ATOMICS

BLUE GRASS CHEMICAL AGENT DESTRUCTION PILOT PLANT PROJECT (BGCAPP)
RICHMOND, KENTUCKY

CONTRACT NO. DAAA09-03-D-0023

DUNNAGE SHREDDING & HANDLING SYSTEM WOOD PROCESS FLOW DIAGRAM

DRAWING NUMBER 24915-07-M5-DWS-00001 | SHEET 2 OF 9 | REV 1

PROFESSIONAL STAMP

bgcapp_d3.dwg

VX Campaign (Peak Rates)	Rockets	Projectiles	Total
Process Rate (rnd/hr)	48	26	74

Stream Number:	107	114	305	306	307	308	311			313	314	315	316	319	320	
Stream Description	Wood / Dunnage from RSM	Wood / Dunnage from PHS	Wood Flour to Hydropulper	Metals from Magnetic Separator	DPE Suits	Liquid Nitrogen to Cryocooler	Non-process Liquid Waste (Spent Oil) to Hydropulper	Spent Decon Fluid (2.25% Bleach)	Spent Decon Fluid (2.25% Bleach) to Storage	Spent Decon Fluid (2.25% Bleach) to Hydropulper	50% Sodium Hydroxide Feed to Hydropulper	Process Water to Hydropulper	Dunnage Slurry to SCWO	CMC to Hydropulper	Wood Pallet	Wood, Misc Wood, Trash, Debris, Protective Clothing to Storage
Temperature F	68	68	68		68	-300	68	68	68	68	68	68	68	68	68	68
Pressure psi	14.23	14.23	14.23	14.23	14.23	48	14.23	14.23	14.23	14.23	14.23		14.23	14.23	14.23	14.23
Instantaneous Flow lb/hr (ACFM)			1204.15852				498.02			582.60264	32.1694	0				
Density lb/cuft	82.464	82.464	82.541		179.393	47.046	48.212	61.982	61.982	61.982	95.394		68.926	57.289	82.464	82.459
Viscosity cP																
Molecular Weight																
Enthalpy MMBtu/hr	-3.195	-0.577	-0.472		-0.003	-0.011	-0.022	-16.075	-15.784	-0.291	-0.014		-5.805	-0.02	-3.772	-3.496
Mass Flow Liquid, Gas lb/hr																
N2	0	0	0	0	0	64.75	0	0	0	0	0	0	0	0	0	0
O2	0	0	0	0	0	0	0	0	0	0	0	0	0	0	0	0
WATER	120.96	21.84	17.693	0	0	0	0	2336.42	2294.11	42.31	1.195	0	715.545	0	142.8	132.507
NAOH	0	0	0	0	0	0	0	0	0	0	1.195	0	0	0	0	0
NACLO	0	0	0	0	0	0	0	53.78	52.806	0.974	0	0	0.974	0	0	0
C14H28	0	0	0	0	0	0	37	0	0	0	0	0	37	0	0	0
NACL	0	0	0	0	0	0	0	0	0	0	0	0	39.346	0	0	0
NA2SO4	0	0	0	0	0	0	0	0	0	0	0	0	84.759	0	0	0
CO2	0	0	0	0	0	0	0	0	0	0	0	0	0.827	0	0	0
NANO2	0	0	0	0	0	0	0	0	0	0	0	0	10.952	0	0	0
NANO3	0	0	0	0	0	0	0	0	0	0	0	0	5.885	0	0	0
SODIUM FORMATE	0	0	0	0	0	0	0	0	0	0	0	0	11.443	0	0	0
SODIUM ACETATE	0	0	0	0	0	0	0	0	0	0	0	0	11.933	0	0	0
GLYCEROL	0	0	0	0	0	0	0	0	0	0	0	0	0.899	0	0	0
Mass Flow Solid lb/hr																
WOOD	483.84	87.36	71.735	0	0	0	0	0	0	0	0	0	71.193	0	571.2	529.061
DPE	0	0	0.015	0	11.1	0	0	0	0	0	0	0	0	0	0	0.108
PLASTIC	0	0	0.019	0	0	0	0	0	0	0	0	0	1.744	0	0	0.143
CMC	0	0	0	0	0	0	0	0	0	0	0	0	6.877	6.877	0	0
SODIUM	0	0	0	0	0	0	0	0	0	0	0	0	0.623	0.623	0	0
NAILS	3.2	3.25	0	6.45	0	0	0	0	0	0	0	0	0	0	6.45	0
Total Average Flow lb/hr	608	112.45	89.462	6.45	11.1	64.75	37	2390.2	2346.916	43.284	2.39	0	1000	7.5	720.45	661.819
Notes	1	1	1										1		1	1

1 - Wood is composed of 20 wt% water, see Assumption 3

Stream Number:	321	322	323	324	325	326	327	328	329	330	331	332	333 & 338	335		336	337	339	350	510
Stream Description	Misc Plastic from Non-munition Sources	Misc Wood, Trash, Debris, Protective Clothing	Vent Two Roll Shredder	Vent Hammer Mill	Vent Wood Micronizer Inlet	Vent Wood Micronizer Cyclone	Vent Wood Flour Storage Tank	Vent Plastic / Rubber Granulator	Vent Plastic / Rubber Cyclone	Vent Plastic / Rubber Storage Bin	Nitrogen Vent to Baghouse	CMC Vent	Vent Hydropulper	Total DPE Suits and Misc Plastic from Non-munition Sources	DPE Suits and Misc Plastic from Non-munition Sources to Storage	DPE Suits and Misc Plastic from Non-munition Sources to Hydropulper	Total Wood and Misc Wood, Trash, Debris, Protective Clothing	Vent Gas to Carbon Beds	Total Liquids to Hydropulper	Energetic Hydrolysate Required to Hydropulper
Temperature F	68	68	68	68	68	68	68	68	68	68	31.5	68	68	68	68	68	68	68	117.8	122
Pressure psi	14.23	14.23	14.23	14.23	14.23	14.23	14.23	14.23	14.23	14.23	48	14.23	14.23	14.23	14.23	14.23	14.23	14.23	14.23	14.23
Instantaneous Flow lb/hr (ACFM)																				11001.4772
Density lb/cuft	68.748	82.464	0.072	0.072	0.072	0.076	0.074	0.072	0.072	0.072	0.256	0.072	0.072	93.449	93.449	93.449	82.464	0.072	67.001	68.766
Viscosity cP			0.018	0.018	0.018	0.018	0.018	0.018	0.018	0.018	0.017	0.018	0.018					0.018		
Molecular Weight			28.634	28.634	28.636	28.692	28.673	28.627	28.623	28.632	28.013	28.623	28.632					28.62		
Enthalpy MMBtu/hr	-0.011	-0.195	-0.303	-0.303	-0.251	-0.053	-0.067	-0.157	-0.026	-0.026	-0.001	-0.026	-0.026	-0.015	-0.013	-0.002	-3.968	-1.034	-5.274	-4.946
Mass Flow Liquid, Gas lb/hr																				
N2	0	0	2520.377	2520.377	2016.302	127.699	252.038	1512.226	252.038	247.749	73.328	252.038	247.749	0	0	0	0	10021.92	0	0
O2	0	0	765.667	765.667	612.534	38.794	76.567	459.4	76.567	76.567	0	76.567	76.567	0	0	0	0	3024.895	0	0
WATER	0	7.4	43.956	43.956	35.165	2.227	4.395	26.374	4.396	4.396	0	4.396	4.396	0	0	0	150.2	173.655	697.382	653.877
NAOH	0	0	0	0	0	0	0	0	0	0	0	0	0	0	0	0	0	0	1.195	0
NACLO	0	0	0	0	0	0	0	0	0	0	0	0	0	0	0	0	0	0	0.974	0
C14H28	0	0	0	0	0	0	0	0	0	0	0	0	0	0	0	0	0	0	37	0
NACL	0	0	0	0	0	0	0	0	0	0	0	0	0	0	0	0	0	0	37.598	37.598
NA2SO4	0	0	0	0	0	0	0	0	0	0	0	0	0	0	0	0	0	0	84.759	84.759
CO2	0	0	0	0	0	0	0	0	0	0	0	0	0	0	0	0	0	0	0	0
NANO2	0	0	0	0	0	0	0	0	0	0	0	0	0	0	0	0	0	0	10.952	10.952
NANO3	0	0	0	0	0	0	0	0	0	0	0	0	0	0	0	0	0	0	5.885	5.885
SODIUM FORMATE	0	0	0	0	0	0	0	0	0	0	0	0	0	0	0	0	0	0	11.443	11.443
SODIUM ACETATE	0	0	0	0	0	0	0	0	0	0	0	0	0	0	0	0	0	0	11.933	11.933
GLYCEROL	0	0	0	0	0	0	0	0	0	0	0	0	0	0	0	0	0	0	0.899	0.899
Mass Flow Solid lb/hr																				
WOOD	0	29.6	8.051	8.051	8.051	8.051	8.16	0	0	0	0	0	0	0	0	0	600.8	0.004	0	0
DPE	0	0	0	0	0	0	0.001	0.122	0	0	0	0	0	11.1	9.685	1.293	0	0	0	0
PLASTIC	14.8	0	0	0	0	0	0.002	0.163	0	0	0	0	0	14.8	12.913	1.724	0	0	0	0
CMC	0	0	0	0	0	0	0	0	0	0	0	0	0	0	0	0	0	0	0	0
SODIUM	0	0	0	0	0	0	0	0	0	0	0	0	0	0	0	0	0	0	0	0
NAILS	0	0	0	0	0	0	0	0	0	0	0	0	0	0	0	0	6.45	0	0	0
Total Average Flow lb/hr	14.8	37	3338.051	3338.051	2672.052	176.771	341.163	1998.285	333.001	328.712	73.328	333.001	328.712	25.9	22.598	3.017	757.45	13220.47	900.02	817.346
Notes		1	1	1	1	1	1										1	1		

NO.	DATE	DESCRIPTION	DR	CK	DL	PE	APPD
17		IDS COMMENT REVISIONS	NL	BH	RB	NW	DJ
0	7-2-04	ISSUED FOR DESIGN	JG	BH	RB	NW	DJ

QUALITY ☐ LEVEL 1 ☒ LEVEL 2 ☐ LEVEL 3 ☐ ALL

BECHTEL PARSONS BLUE GRASS
A Joint Venture of Bechtel National, INC. and Parsons Infrastructure & Technology Group Inc.

DOD PROGRAM MANAGER FOR ASSEMBLED CHEMICAL WEAPONS ASSESSMENT EDGEWOOD, MARYLAND

US ARMY ENGINEERING AND SUPPORT CENTER, HUNTSVILLE HUNTSVILLE, ALABAMA

GENERAL ATOMICS

BLUE GRASS CHEMICAL AGENT DESTRUCTION PILOT PLANT PROJECT (BGCAPP)
RICHMOND, KENTUCKY

CONTRACT NO. DAAA09-03-D-0023

DUNNAGE SHREDDING & HANDLING SYSTEM WOOD PROCESS FLOW DIAGRAM

DRAWING NUMBER 24915-07-M5-DWS-00001 | SHEET 3 OF 9 | REV 1

PROFESSIONAL STAMP

bgcapp_d3.dwg

H Campaign (Peak Rates)	Total
Process Rate (md/hr)	26

Stream Number:	107	114	305	306	307	308	311			313	314	315	316	319	320	
Stream Description	Wood / Dunnage from RSM	Wood / Dunnage from PHS	Wood Flour to Hydropulper	Metals from Magnetic Separator	DPE Suits	Liquid Nitrogen to Cryocooler	Non-process Liquid Waste (Spent Oil) to Hydropulper	Spent Decon Fluid (2.25% Bleach)	Spent Decon Fluid (2.25% Bleach) to Storage	Spent Decon Fluid (2.25% Bleach) to Hydropulper	50% Sodium Hydroxide Feed to Hydropulper	Process Water to Hydropulper	Dunnage Slurry to SCWO	CMC to Hydropulper	Wood Pallet	Wood, Misc Wood, Trash, Debris, Protective Clothing to Storage
Temperature F		68	68		68	-300	68	68	68	68	68	68	68	68	68	68
Pressure psi		14.23	14.23	14.23	14.23	48	14.23	14.23	14.23	14.23	14.23		14.23	14.23	14.23	14.23
Instantaneous Flow lb/hr (ACFM)			1159.83474				174.98			1150.83	66.8962	0				
Density lb/cuft		82.464	82.546		179.393	47.046	48.212	61.982	61.982	61.982	95.394		66.889	57.289	82.464	82.304
Viscosity cP																
Molecular Weight																
Enthalpy MMBtu/hr		-0.577	-0.455		-0.001	-0.004	-0.008	-5.648	-5.073	-0.575	-0.029		-6.174	-0.02	-0.577	-0.191
Mass Flow Liquid, Gas lb/hr																
N2		0	0	0	0	22.75	0	0	0	0	0	0	0	0	0	0
O2		0	0	0	0	0	0	0	0	0	0	0	0	0	0	0
WATER		21.84	17.035	0	0	0	0	820.9	737.324	83.576	2.485	0	801.005	0	21.84	7.406
NAOH		0	0	0	0	0	0	0	0	0	2.485	0	0	0	0	0
NACLO		0	0	0	0	0	0	18.9	16.976	1.924	0	0	1.924	0	0	0
C14H28		0	0	0	0	0	13	0	0	0	0	0	13	0	0	0
NACL		0	0	0	0	0	0	0	0	0	0	0	27.851	0	0	0
NA2SO4		0	0	0	0	0	0	0	0	0	0	0	54.805	0	0	0
CO2		0	0	0	0	0	0	0	0	0	0	0	1.72	0	0	0
NANO2		0	0	0	0	0	0	0	0	0	0	0	4.461	0	0	0
NANO3		0	0	0	0	0	0	0	0	0	0	0	0	0	0	0
SODIUM FORMATE		0	0	0	0	0	0	0	0	0	0	0	15.294	0	0	0
SODIUM ACETATE		0	0	0	0	0	0	0	0	0	0	0	0.876	0	0	0
GLYCEROL		0	0	0	0	0	0	0	0	0	0	0	0	0	0	0
Mass Flow Solid lb/hr																
WOOD		87.36	69.064	0	0	0	0	0	0	0	0	0	67.939	0	87.36	28.695
DPE		0	0.03	0	3.9	0	0	0	0	0	0	0	0	0	0	0.013
PLASTIC		0	0.04	0	0	0	0	0	0	0	0	0	3.625	0	0	0.017
CMC		0	0	0	0	0	0	0	0	0	0	0	6.877	6.677	0	0
SODIUM		0	0	0	0	0	0	0	0	0	0	0	0.623	0.623	0	0
NAILS		3.25	0	3.25	0	0	0	0	0	0	0	0	0	0	3.25	0
Total Average Flow lb/hr	0	112.45	86.169	3.25	3.9	22.75	13	839.8	754.3	85.5	4.97	0	1000	7.5	112.45	36.131
Notes		1	1										1		1	1

1 - Wood is composed of 20 wt% water, see Assumption 3

Stream Number:	321	322	323	324	325	326	327	328	329	330	331	332	333 & 338	335		336	337	339	350	510
Stream Description	Misc Plastic from Non-munition Sources	Misc Wood, Trash, Debris, Protective Clothing	Vent Two Roll Shredder	Vent Hammer Mill	Vent Wood Micronizer Inlet	Vent Wood Micronizer Cyclone	Vent Wood Flour Storage Tank	Vent Plastic / Rubber Granulator	Vent Plastic / Rubber Cyclone	Vent Plastic / Rubber Storage Bin	Nitrogen Vent to Baghouse	CMC Vent	Vent Hydropulper	Total DPE Suits and Misc Plastic from Non-munition Sources	DPE Suits and Misc Plastic from Non-munition Sources to Storage	DPE Suits and Misc Plastic from Non-munition Sources to Hydropulper	Total Wood and Misc Wood, Trash, Debris, Protective Clothing	Vent Gas to Carbon Beds	Total Liquids to Hydropulper	Energetic Hydrolysate Required to Hydropulper
Temperature F	68	68	68	68	68	68	68	68	68	68	55.9	68	68	68	68	68	68	68	116.4	122
Pressure psi	14.23	14.23	14.23	14.23	14.23	14.23	14.23	14.23	14.23	14.23	48	14.23	14.23	14.23	14.23	14.23	14.23	14.23	14.23	14.23
Instantaneous Flow lb/hr (ACFM)																				10722.0476
Density lb/cuft	68.748	82.464	0.072	0.072	0.072	0.073	0.072	0.072	0.072	0.072	0.243	0.072	0.072	93.449	93.449	93.449	82.464	0.072	65.092	65.727
Viscosity cP			0.018	0.018	0.018	0.018	0.018	0.018	0.018	0.018	0.017	0.018	0.018					0.018		
Molecular Weight			28.626	28.626	28.626	28.648	28.639	28.625	28.623	28.632	28.013	28.623	28.632					28.622		
Enthalpy MMBtu/hr	-0.004	-0.069	-0.268	-0.268	-0.216	-0.02	-0.033	-0.157	-0.026	-0.026	0	-0.026	-0.026	-0.005	-0.002	-0.004	-0.646	-1.033	-5.654	-5.041
Mass Flow Liquid, Gas lb/hr																				
N2	0	0	2520.377	2520.377	2016.302	127.699	252.038	1512.226	252.038	247.749	31.328	252.038	247.749	0	0	0	0	9979.92	0	0
O2	0	0	765.667	765.667	612.534	38.794	76.567	459.4	76.567	76.567	0	76.567	76.567	0	0	0	0	3024.895	0	0
WATER	0	2.6	43.956	43.956	35.165	2.227	4.395	26.374	4.396	4.396	0	4.396	4.396	0	0	0	24.44	173.655	782.995	696.934
NAOH	0	0	0	0	0	0	0	0	0	0	0	0	0	0	0	0	0	0	2.485	0
NACLO	0	0	0	0	0	0	0	0	0	0	0	0	0	0	0	0	0	0	1.924	0
C14H28	0	0	0	0	0	0	0	0	0	0	0	0	0	0	0	0	0	0	13	0
NACL	0	0	0	0	0	0	0	0	0	0	0	0	0	0	0	0	0	0	24.216	24.216
NA2SO4	0	0	0	0	0	0	0	0	0	0	0	0	0	0	0	0	0	0	54.805	54.805
CO2	0	0	0	0	0	0	0	0	0	0	0	0	0	0	0	0	0	0	0	0
NANO2	0	0	0	0	0	0	0	0	0	0	0	0	0	0	0	0	0	0	4.461	4.461
NANO3	0	0	0	0	0	0	0	0	0	0	0	0	0	0	0	0	0	0	0	0
SODIUM FORMATE	0	0	0	0	0	0	0	0	0	0	0	0	0	0	0	0	0	0	15.294	15.294
SODIUM ACETATE	0	0	0	0	0	0	0	0	0	0	0	0	0	0	0	0	0	0	0.876	0.876
GLYCEROL	0	0	0	0	0	0	0	0	0	0	0	0	0	0	0	0	0	0	0	0
Mass Flow Solid lb/hr																				
WOOD	0	10.4	1.31	1.31	1.31	1.31	1.328	0	0	0	0	0	0	0	0	0	97.76	0.001	0	0
DPE	0	0	0	0	0	0	0	0.043	0	0	0	0	0	3.9	1.169	2.688	0	0	0	0
PLASTIC	5.2	0	0	0	0	0	0.001	0.057	0	0	0	0	0	5.2	1.558	3.585	0	0	0	0
CMC	0	0	0	0	0	0	0	0	0	0	0	0	0	0	0	0	0	0	0	0
SODIUM	0	0	0	0	0	0	0	0	0	0	0	0	0	0	0	0	0	0	0	0
NAILS	0	0	0	0	0	0	0	0	0	0	0	0	0	0	0	0	3.25	0	0	0
Total Average Flow lb/hr	5.2	13	3331.31	3331.31	2665.311	170.03	334.329	1998.1	333.001	328.712	31.328	333.001	328.712	9.1	2.727	6.273	125.45	13178.47	900.056	796.586
Notes	1	1	1	1	1	1	1										1	1		

NO.	DATE	DESCRIPTION	DR	CK	DL	PE	APPD
1		IDS COMMENT REVISIONS	NL	BH	RB	NW	DJ
0	7-2-04	ISSUED FOR DESIGN	EL	BH	RB	NW	DJ

QUALITY ☐ LEVEL 1 ☒ LEVEL 2 ☐ LEVEL 3 ☐ ALL

BECHTEL PARSONS BLUE GRASS
A Joint Venture of Bechtel National, INC. and Parsons Infrastructure & Technology Group Inc.

DOD PROGRAM MANAGER FOR ASSEMBLED CHEMICAL WEAPONS ASSESSMENT EDGEWOOD, MARYLAND

US ARMY ENGINEERING AND SUPPORT CENTER, HUNTSVILLE HUNTSVILLE, ALABAMA

GENERAL ATOMICS

BLUE GRASS CHEMICAL AGENT DESTRUCTION PILOT PLANT PROJECT (BGCAPP)
RICHMOND, KENTUCKY

CONTRACT NO. DAAA09-03-D-0023

DUNNAGE SHREDDING & HANDLING SYSTEM
WOOD
PROCESS FLOW DIAGRAM

PROFESSIONAL STAMP

DRAWING NUMBER 24915-07-M5-DWS-00001 | SHEET 4 OF 9 | REV 1

bgcapp_d3.dwg

GB Campaign (Rockets only)	Rockets		Total																																
Process Rates (rnd/hr)	40		40																																
Stream Number:	107	114	305	306	307	308	311			313	314	315	316	319	320		321	322	323	324	325	326	327	328	329	330	331	332	333 & 338	335		336	337	339	350	510
Stream Description	Wood / Dunnage from RSM	Wood / Dunnage from PHS	Wood Flour to Hydropulper	Metals from Magnetic Separator	DPE Suits	Liquid Nitrogen to Cryocooler	Non-process Liquid Waste (Spent Oil) to Hydropulper	Spent Decon Fluid (2.25% Bleach)	Spent Decon Fluid (2.25% Bleach) to Storage	Spent Decon Fluid (2.25% Bleach) to Hydropulper	50% Sodium Hydroxide Feed to Hydropulper	Process Water to Hydropulper	Dunnage Slurry to SCWO	CMC to Hydropulper	Wood Pallet	Wood, Misc Wood, Trash, Debris, Protective Clothing to Storage	Misc Plastic from Non-munition Sources	Misc Wood, Trash, Debris, Protective Clothing	Vent Two Roll Shredder	Vent Hammer Mill	Vent Wood Micronizer Inlet	Vent Wood Micronizer Cyclone	Vent Wood Flour Storage Tank	Vent Plastic / Rubber Granulator	Vent Plastic / Rubber Cyclone	Vent Plastic / Rubber Storage Bin	Nitrogen Vent to Baghouse	CMC Vent	Vent Hydropulper	Total DPE Suits and Misc Plastic from Non-munition Sources	DPE Suits and Misc Plastic from Non-munition Sources to Storage	DPE Suits and Misc Plastic from Non-munition Sources to Hydropulper	Total Wood and Misc Wood, Trash, Debris, Protective Clothing	Vent Gas to Carbon Beds	Total Liquids to Hydropulper	Energetic Hydrolysate Required to Hydropulper
Temperature F	68		68		68	-300	68	68	68	68	68	68	68	68	68	68	68	68	68	68	68	68	68	68	68	68	49.3	68	68	68	68	68	68	68	118.4	122
Pressure psi	14.23		14.23	14.23	14.23	48	14.23	14.23	14.23	14.23	14.23		14.23	14.23	14.23	14.23	14.23	14.23	14.23	14.23	14.23	14.23	14.23	14.23	14.23	14.23	48	14.23	14.23	14.23	14.23	14.23	14.23	14.23	14.23	14.23
Instantaneous Flow lb/hr (ACFM)			1213.16326				269.2			582.60264	25.11636	0																								11237.2425
Density lb/cuft	82.464		82.54		179.393	47.046	48.212	61.982	61.982	61.982	95.394		69.485	57.289	82.464	82.453	68.748	82.464	0.072	0.072	0.072	0.075	0.073	0.072	0.072	0.072	0.247	0.072	0.072	93.449	93.449	93.449	82.464	0.072	67.645	68.766
Viscosity cP																			0.018	0.018	0.018	0.018	0.018	0.018	0.018	0.018	0.017	0.018	0.018					0.018		
Molecular Weight																			28.632	28.632	28.633	28.681	28.664	28.625	28.623	28.632	28.013	28.623	28.632					28.622		
Enthalpy MMBtu/hr	-2.663		-0.476		-0.002	-0.006	-0.012	-8.689	-8.398	-0.291	-0.011		-5.901	-0.02	-2.663	-2.293	-0.006	-0.106	-0.291	-0.291	-0.238	-0.041	-0.055	-0.157	-0.026	-0.026	0	-0.026	-0.026	-0.008	-0.006	-0.001	-2.768	-1.033	-5.366	-5.052
Mass Flow Liquid, Gas lb/hr																																				
N2	0		0	0	0	35	0	0	0	0	0	0	0	0	0	0	0	0	2520.377	2520.377	2016.302	127.699	252.038	1512.226	252.038	247.749	43.578	252.038	247.749	0	0	0	0	9992.17	0	0
O2	0		0	0	0	0	0	0	0	0	0	0	0	0	0	0	0	0	765.667	765.667	612.534	38.794	76.567	459.4	76.567	76.567	0	76.567	76.567	0	0	0	0	3024.895	0	0
WATER	100.8		17.827	0	0	0	0	1262.93	1220.62	42.31	0.933	0	729.327	0	100.8	86.973	0	4	43.956	43.956	35.165	2.227	4.395	26.374	4.396	4.396	0	4.396	4.396	0	0	0	104.8	173.655	711.134	667.89
NAOH	0		0	0	0	0	0	0	0	0	0.933	0	0	0	0	0	0	0	0	0	0	0	0	0	0	0	0	0	0	0	0	0	0	0	0.933	0
NACLO	0		0	0	0	0	0	29.07	28.096	0.974	0	0	0.974	0	0	0	0	0	0	0	0	0	0	0	0	0	0	0	0	0	0	0	0	0	0.974	0
C14H28	0		0	0	0	0	20	0	0	0	0	0	20	0	0	0	0	0	0	0	0	0	0	0	0	0	0	0	0	0	0	0	0	0	20	0
NACL	0		0	0	0	0	0	0	0	0	0	0	39.768	0	0	0	0	0	0	0	0	0	0	0	0	0	0	0	0	0	0	0	0	0	38.404	38.404
NA2SO4	0		0	0	0	0	0	0	0	0	0	0	86.575	0	0	0	0	0	0	0	0	0	0	0	0	0	0	0	0	0	0	0	0	0	86.575	86.575
CO2	0		0	0	0	0	0	0	0	0	0	0	0.646	0	0	0	0	0	0	0	0	0	0	0	0	0	0	0	0	0	0	0	0	0	0	0
NANO2	0		0	0	0	0	0	0	0	0	0	0	11.187	0	0	0	0	0	0	0	0	0	0	0	0	0	0	0	0	0	0	0	0	0	11.187	11.187
NANO3	0		0	0	0	0	0	0	0	0	0	0	6.011	0	0	0	0	0	0	0	0	0	0	0	0	0	0	0	0	0	0	0	0	0	6.011	6.011
SODIUM FORMATE	0		0	0	0	0	0	0	0	0	0	0	11.688	0	0	0	0	0	0	0	0	0	0	0	0	0	0	0	0	0	0	0	0	0	11.688	11.688
SODIUM ACETATE	0		0	0	0	0	0	0	0	0	0	0	12.189	0	0	0	0	0	0	0	0	0	0	0	0	0	0	0	0	0	0	0	0	0	12.189	12.189
GLYCEROL	0		0	0	0	0	0	0	0	0	0	0	0.918	0	0	0	0	0	0	0	0	0	0	0	0	0	0	0	0	0	0	0	0	0	0.918	0.918
Mass Flow Solid lb/hr																																				
WOOD	403.2		72.278	0	0	0	0	0	0	0	0	0	71.855	0	403.2	346.92	0	16	5.617	5.617	5.617	5.617	5.694	0	0	0	0	0	0	0	0	0	419.2	0.003	0	0
DPE	0		0.011	0	6	0	0	0	0	0	0	0	0	0	0	0.055	0	0	0	0	0	0	0.001	0.066	0	0	0	0	0	6	4.925	1.009	0	0	0	0
PLASTIC	0		0.015	0	0	0	0	0	0	0	0	0	1.361	0	0	0.073	8	0	0	0	0	0	0.001	0.088	0	0	0	0	0	8	6.566	1.346	0	0	0	0
CMC	0		0	0	0	0	0	0	0	0	0	0	6.877	6.877	0	0	0	0	0	0	0	0	0	0	0	0	0	0	0	0	0	0	0	0	0	0
SODIUM	0		0	0	0	0	0	0	0	0	0	0	0.623	0.623	0	0	0	0	0	0	0	0	0	0	0	0	0	0	0	0	0	0	0	0	0	0
NAILS	2.67		0	2.67	0	0	0	0	0	0	0	0	0	0	2.67	0	0	0	0	0	0	0	0	0	0	0	0	0	0	0	0	0	2.67	0	0	0
Total Average Flow lb/hr	506.67	0	90.131	2.67	6	35	20	1292	1248.716	43.284	1.866	0	999.999	7.5	506.67	434.021	8	20	3335.617	3335.617	2669.618	174.337	338.696	1998.154	333.001	328.712	43.578	333.001	328.712	14	11.491	2.355	526.67	13190.72	900.013	834.862
Notes	1		1										1		1	1	1	1	1	1	1	1	1										1	1		

1 - Wood is composed of 20 wt% water, see Assumption 3

13

NO.	DATE	DESCRIPTION	DR	CK	DL	PE	APPD
1		IDS COMMENT REVISIONS	NL	BH	RB	NW	DJ
0	7-2-04	ISSUED FOR DESIGN	JG	BH	RB	NW	DJ

QUALITY ☐ LEVEL 1 ☒ LEVEL 2 ☐ LEVEL 3 ☐ ALL

BECHTEL PARSONS BLUE GRASS
A Joint Venture of Bechtel National, INC. and Parsons Infrastructure & Technology Group Inc.

DOD PROGRAM MANAGER FOR ASSEMBLED CHEMICAL WEAPONS ASSESSMENT EDGEWOOD, MARYLAND

US ARMY ENGINEERING AND SUPPORT CENTER, HUNTSVILLE HUNTSVILLE, ALABAMA

GENERAL ATOMICS

BLUE GRASS CHEMICAL AGENT DESTRUCTION PILOT PLANT PROJECT (BGCAPP)
RICHMOND, KENTUCKY

CONTRACT NO. DAAA09-03-D-0023

DUNNAGE SHREDDING & HANDLING SYSTEM WOOD PROCESS FLOW DIAGRAM

DRAWING NUMBER 24915-07-M5-DWS-00001 | SHEET 5 OF 9 | REV 1

PROFESSIONAL STAMP

bgcapp_d3.dwg

VX Campaign (Rockets only)	Rockets		Total
Process Rates (rnd/hr)	48		48

Stream Number:	107	114	305	306	307	308	311			313	314	315	316	319	320	
Stream Description	Wood / Dunnage from RSM	Wood / Dunnage from PHS	Wood Flour to Hydropulper	Metals from Magnetic Separator	DPE Suits	Liquid Nitrogen to Cryocooler	Non-process Liquid Waste (Spent Oil) to Hydropulper	Spent Decon Fluid (2.25% Bleach)	Spent Decon Fluid (2.25% Bleach) to Storage	Spent Decon Fluid (2.25% Bleach) to Hydropulper	50% Sodium Hydroxide Feed to Hydropulper	Process Water to Hydropulper	Dunnage Slurry to SCWO	CMC to Hydropulper	Wood Pallet	Wood, Misc Wood, Trash, Debris, Protective Clothing to Storage
Temperature F	68		68		68	-300	68	68	68	68	68	68	68	68	68	68
Pressure psi	14.23		14.23	14.23	14.23	48	14.23	14.23	14.23	14.23	14.23		14.23	14.23	14.23	14.23
Instantaneous Flow lb/hr (ACFM)			1213.16326				323.04			582.60264	25.11636	0				
Density lb/cuft	82.464		82.54		179.393	47.046	48.212	61.982	61.982	61.982	95.394		69.353	57.289	82.464	82.456
Viscosity cP																
Molecular Weight																
Enthalpy MMBtu/hr	-3.195		-0.476		-0.002	-0.007	-0.014	-10.427	-10.136	-0.291	-0.011		-5.879	-0.02	-3.195	-2.846
Mass Flow Liquid, Gas lb/hr																
N2	0		0	0	0	42	0	0	0	0	0	0	0	0	0	0
O2	0		0	0	0	0	0	0	0	0	0	0	0	0	0	0
WATER	120.96		17.827	0	0	0	0	1515.52	1473.21	42.31	0.933	0	726.127	0	120.96	107.933
NAOH	0		0	0	0	0	0	0	0	0	0.933	0	0	0	0	0
NACLO	0		0	0	0	0	0	34.88	33.906	0.974	0	0	0.974	0	0	0
C14H28	0		0	0	0	0	24	0	0	0	0	0	24	0	0	0
NACL	0		0	0	0	0	0	0	0	0	0	0	39.584	0	0	0
NA2SO4	0		0	0	0	0	0	0	0	0	0	0	86.16	0	0	0
CO2	0		0	0	0	0	0	0	0	0	0	0	0.646	0	0	0
NANO2	0		0	0	0	0	0	0	0	0	0	0	11.134	0	0	0
NANO3	0		0	0	0	0	0	0	0	0	0	0	5.982	0	0	0
SODIUM FORMATE	0		0	0	0	0	0	0	0	0	0	0	11.632	0	0	0
SODIUM ACETATE	0		0	0	0	0	0	0	0	0	0	0	12.131	0	0	0
GLYCEROL	0		0	0	0	0	0	0	0	0	0	0	0.914	0	0	0
Mass Flow Solid lb/hr																
WOOD	483.84		72.278	0	0	0	0	0	0	0	0	0	71.855	0	483.84	430.759
DPE	0		0.011	0	7.2	0	0	0	0	0	0	0	0	0	0	0.068
PLASTIC	0		0.015	0	0	0	0	0	0	0	0	0	1.361	0	0	0.09
CMC	0		0	0	0	0	0	0	0	0	0	0	6.877	6.877	0	0
SODIUM	0		0	0	0	0	0	0	0	0	0	0	0.623	0.623	0	0
NAILS	3.2		0	3.2	0	0	0	0	0	0	0	0	0	0	3.2	0
Total Average Flow lb/hr	608	0	90.131	3.2	7.2	42	24	1550.4	1507.116	43.284	1.866	0	1000	7.5	608	538.85
Notes	1		1										1		1	1

Stream Number:	321	322	323	324	325	326	327	328	329	330	331	332	333 & 338	335		336	337	339	350	510
Stream Description	Misc Plastic from Non-munition Sources	Misc Wood, Trash, Debris, Protective Clothing	Vent Two Roll Shredder	Vent Hammer Mill	Vent Wood Micronizer Inlet	Vent Wood Micronizer Cyclone	Vent Wood Flour Storage Tank	Vent Plastic / Rubber Granulator	Vent Plastic / Rubber Cyclone	Vent Plastic / Rubber Storage Bin	Nitrogen Vent to Baghouse	CMC Vent	Vent Hydropulper	Total DPE Suits and Misc Plastic from Non-munition Sources	DPE Suits and Misc Plastic from Non-munition Sources to Storage	DPE Suits and Misc Plastic from Non-munition Sources to Hydropulper	Total Wood and Misc Wood, Trash, Debris, Protective Clothing	Vent Gas to Carbon Beds	Total Liquids to Hydropulper	Energetic Hydrolysate Required to Hydropulper
Temperature F	68	68	68	68	68	68	68	68	68	68	45.3	68	68	68	68	68	68	68	118.2	122
Pressure psi	14.23	14.23	14.23	14.23	14.23	14.23	14.23	14.23	14.23	14.23	48	14.23	14.23	14.23	14.23	14.23	14.23	14.23	14.23	14.23
Instantaneous Flow lb/hr (ACFM)																				11183.4294
Density lb/cuft	68.748	82.464	0.072	0.072	0.072	0.075	0.074	0.072	0.072	0.072	0.249	0.072	0.072	93.449	93.449	93.449	82.464	0.072	67.486	68.766
Viscosity cP			0.018	0.018	0.018	0.018	0.018	0.018	0.018	0.018	0.017	0.018	0.018					0.018		
Molecular Weight			28.633	28.633	28.635	28.687	28.668	28.626	28.623	28.632	28.013	28.623	28.632					28.621		
Enthalpy MMBtu/hr	-0.007	-0.127	-0.297	-0.297	-0.244	-0.047	-0.061	-0.157	-0.026	-0.026	0	-0.026	-0.026	-0.009	-0.008	-0.001	-3.322	-1.033	-5.345	-5.028
Mass Flow Liquid, Gas lb/hr																				
N2	0	0	2520.377	2520.377	2016.302	127.699	252.038	1512.226	252.038	247.749	50.578	252.038	247.749	0	0	0	0	9999.17	0	0
O2	0	0	765.667	765.667	612.534	38.794	76.567	459.4	76.567	76.567	0	76.567	76.567	0	0	0	0	3024.895	0	0
WATER	0	4.8	43.956	43.956	35.165	2.227	4.395	26.374	4.396	4.396	0	4.396	4.396	0	0	0	125.76	173.655	707.934	664.69
NAOH	0	0	0	0	0	0	0	0	0	0	0	0	0	0	0	0	0	0	0.933	0
NACLO	0	0	0	0	0	0	0	0	0	0	0	0	0	0	0	0	0	0	0.974	0
C14H28	0	0	0	0	0	0	0	0	0	0	0	0	0	0	0	0	0	0	24	0
NACL	0	0	0	0	0	0	0	0	0	0	0	0	0	0	0	0	0	0	38.22	38.22
NA2SO4	0	0	0	0	0	0	0	0	0	0	0	0	0	0	0	0	0	0	86.161	86.161
CO2	0	0	0	0	0	0	0	0	0	0	0	0	0	0	0	0	0	0	0	0
NANO2	0	0	0	0	0	0	0	0	0	0	0	0	0	0	0	0	0	0	11.134	11.134
NANO3	0	0	0	0	0	0	0	0	0	0	0	0	0	0	0	0	0	0	5.982	5.982
SODIUM FORMATE	0	0	0	0	0	0	0	0	0	0	0	0	0	0	0	0	0	0	11.632	11.632
SODIUM ACETATE	0	0	0	0	0	0	0	0	0	0	0	0	0	0	0	0	0	0	12.131	12.131
GLYCEROL	0	0	0	0	0	0	0	0	0	0	0	0	0	0	0	0	0	0	0.914	0.914
Mass Flow Solid lb/hr																				
WOOD	0	19.2	6.741	6.741	6.741	6.741	6.832	0	0	0	0	0	0	0	0	0	503.04	0.003	0	0
DPE	0	0	0	0	0	0	0.001	0.079	0	0	0	0	0	7.2	6.111	1.009	0	0	0	0
PLASTIC	9.6	0	0	0	0	0	0.001	0.106	0	0	0	0	0	9.6	8.149	1.346	0	0	0	0
CMC	0	0	0	0	0	0	0	0	0	0	0	0	0	0	0	0	0	0	0	0
SODIUM	0	0	0	0	0	0	0	0	0	0	0	0	0	0	0	0	0	0	0	0
NAILS	0	0	0	0	0	0	0	0	0	0	0	0	0	0	0	0	3.2	0	0	0
Total Average Flow lb/hr	9.6	24	3336.741	3336.741	2670.742	175.461	339.834	1998.185	333.001	328.712	50.578	333.001	328.712	16.8	14.26	2.355	632	13197.72	900.015	830.864
Notes		1	1	1	1	1	1										1	1		

1 - Wood is composed of 20 wt% water, see Assumption 3

14

NO.	DATE	DESCRIPTION	DR	CK	DL	PE	APPD
1		IDS COMMENT REVISIONS	NL	BH	RB	NW	DJ
0	7-2-04	ISSUED FOR DESIGN	JG	BH	RB	NW	DJ

QUALITY ☐ LEVEL 1 ☒ LEVEL 2 ☐ LEVEL 3 ☐ ALL

BECHTEL PARSONS BLUE GRASS
A Joint Venture of Bechtel National, INC. and Parsons Infrastructure & Technology Group Inc.

DOD PROGRAM MANAGER FOR ASSEMBLED CHEMICAL WEAPONS ASSESSMENT EDGEWOOD, MARYLAND

US ARMY ENGINEERING AND SUPPORT CENTER, HUNTSVILLE HUNTSVILLE, ALABAMA

GENERAL ATOMICS

BLUE GRASS CHEMICAL AGENT DESTRUCTION PILOT PLANT PROJECT (BGCAPP)
RICHMOND, KENTUCKY

CONTRACT NO. DAAA09-03-D-0023

DUNNAGE SHREDDING & HANDLING SYSTEM WOOD PROCESS FLOW DIAGRAM

DRAWING NUMBER 24915-07-M5-DWS-00001 | SHEET 6 OF 9 | REV 1

PROFESSIONAL STAMP

bgcapp_d3.dwg

GB Campaign (Average Rates)	Rockets	Projectiles	Total
Process Rate (md/hr)	24.8	10.9	35.7

Stream Number:	107	114	305	306	307	308	311			313	314	315	316	319	320		321	322	323	324	325	326	327	328	329	330	331	332	333 & 338	335		336	337	339	350	510
Stream Description	Wood / Dunnage from RSM	Wood / Dunnage from PHS	Wood Flour to Hydropulper	Metals from Magnetic Separator	DPE Suits	Liquid Nitrogen to Cryocooler	Non-process Liquid Waste (Spent Oil) to Hydropulper	Spent Decon Fluid (2.25% Bleach)	Spent Decon Fluid (2.25% Bleach) to Storage	Spent Decon Fluid (2.25% Bleach) to Hydropulper	50% Sodium Hydroxide Feed to Hydropulper	Process Water to Hydropulper	Dunnage Slurry to SCWO	CMC to Hydropulper	Wood Pallet	Wood, Misc Wood, Trash, Debris, Protective Clothing to Storage	Misc Plastic from Non-munition Sources	Misc Wood, Trash, Debris, Protective Clothing	Vent Two Roll Shredder	Vent Hammer Mill	Vent Wood Micronizer Inlet	Vent Wood Micronizer Cyclone	Vent Wood Flour Storage Tank	Vent Plastic / Rubber Granulator	Vent Plastic / Rubber Cyclone	Vent Plastic / Rubber Storage Bin	Nitrogen Vent to Baghouse	CMC Vent	Vent Hydropulper	Total DPE Suits and Misc Plastic from Non-munition Sources	DPE Suits and Misc Plastic from Non-munition Sources to Storage	DPE Suits and Misc Plastic from Non-munition Sources to Hydropulper	Total Wood and Misc Wood, Trash, Debris, Protective Clothing	Vent Gas to Carbon Beds	Total Liquids to Hydropulper	Energetic Hydrolysate Required to Hydropulper
Temperature F	68	68	68		68	-300	68	68	68	68	68	68	68	68	68	68	68	68	68	68	68	68	68	68	68	68	51.4	68	68	68	68	68	68	68	118.5	122
Pressure psi	14.23	14.23	14.23	14.23	14.23	48	14.23	14.23	14.23	14.23	14.23		14.23	14.23	14.23	14.23	14.23	14.23	14.23	14.23	14.23	14.23	14.23	14.23	14.23	14.23	48	14.23	14.23	14.23	14.23	14.23	14.23	14.23	14.23	14.23
Instantaneous Flow lb/hr (ACFM)			1209.7848				240.261			582.60264	27.78144	0																								11263.5837
Density lb/cuft	82.464	82.463	82.539		179.393	47.046	48.212	61.982	61.982	61.982	95.394		69.555	57.289	82.464	82.448	68.748	82.464	0.072	0.072	0.072	0.074	0.073	0.072	0.072	0.072	0.246	0.072	0.072	93.449	93.449	93.449	82.464	0.072	67.738	68.766
Viscosity cP																			0.018	0.018	0.018	0.018	0.018	0.018	0.018	0.018	0.017	0.018	0.018					0.018		
Molecular Weight																			28.63	28.63	28.632	28.675	28.659	28.625	28.623	28.632	28.013	28.623	28.632					28.622		
Enthalpy MMBtu/hr	-1.651	-0.483	-0.474		-0.002	-0.005	-0.011	-7.755	-7.464	-0.291	-0.012		-5.912	-0.02	-2.134	-1.754	-0.005	-0.094	-0.285	-0.285	-0.233	-0.036	-0.049	-0.157	-0.026	-0.026	0	-0.026	-0.026	-0.007	-0.006	-0.001	-2.228	-1.033	-5.378	-5.064
Mass Flow Liquid, Gas lb/hr																																				
N2	0	0	0	0	0	31.238	0	0	0	0	0	0	0	0	0	0	0	0	2520.377	2520.377	2016.302	127.699	252.038	1512.226	252.038	247.749	39.816	252.038	247.749	0	0	0	0	9988.407	0	0
O2	0	0	0	0	0	0	0	0	0	0	0	0	0	0	0	0	0	0	765.667	765.667	612.534	38.794	76.567	459.4	76.567	76.567	0	76.567	76.567	0	0	0	0	3024.895	0	0
WATER	62.5	18.28	17.779	0	0	0	0	1127.17	1084.86	42.31	1.032	0	730.98	0	80.78	66.572	0	3.57	43.956	43.956	35.165	2.227	4.395	26.374	4.396	4.396	0	4.396	4.396	0	0	0	84.35	173.655	712.797	669.455
NAOH	0	0	0	0	0	0	0	0	0	0	1.032	0	0	0	0	0	0	0	0	0	0	0	0	0	0	0	0	0	0	0	0	0	0	0	1.032	0
NACLO	0	0	0	0	0	0	0	25.94	24.966	0.974	0	0	0.974	0	0	0	0	0	0	0	0	0	0	0	0	0	0	0	0	0	0	0	0	0	0.974	0
C14H28	0	0	0	0	0	0	17.85	0	0	0	0	0	17.85	0	0	0	0	0	0	0	0	0	0	0	0	0	0	0	0	0	0	0	0	0	17.85	0
NACL	0	0	0	0	0	0	0	0	0	0	0	0	40.003	0	0	0	0	0	0	0	0	0	0	0	0	0	0	0	0	0	0	0	0	0	38.494	38.494
NA2SO4	0	0	0	0	0	0	0	0	0	0	0	0	86.778	0	0	0	0	0	0	0	0	0	0	0	0	0	0	0	0	0	0	0	0	0	86.778	86.778
CO2	0	0	0	0	0	0	0	0	0	0	0	0	0.714	0	0	0	0	0	0	0	0	0	0	0	0	0	0	0	0	0	0	0	0	0	0	0
NANO2	0	0	0	0	0	0	0	0	0	0	0	0	11.213	0	0	0	0	0	0	0	0	0	0	0	0	0	0	0	0	0	0	0	0	0	11.213	11.213
NANO3	0	0	0	0	0	0	0	0	0	0	0	0	6.025	0	0	0	0	0	0	0	0	0	0	0	0	0	0	0	0	0	0	0	0	0	6.025	6.025
SODIUM FORMATE	0	0	0	0	0	0	0	0	0	0	0	0	11.715	0	0	0	0	0	0	0	0	0	0	0	0	0	0	0	0	0	0	0	0	0	11.715	11.715
SODIUM ACETATE	0	0	0	0	0	0	0	0	0	0	0	0	12.218	0	0	0	0	0	0	0	0	0	0	0	0	0	0	0	0	0	0	0	0	0	12.218	12.218
GLYCEROL	0	0	0	0	0	0	0	0	0	0	0	0	0.92	0	0	0	0	0	0	0	0	0	0	0	0	0	0	0	0	0	0	0	0	0	0.921	0.921
Mass Flow Solid lb/hr																																				
WOOD	249.98	73.1	72.071	0	0	0	0	0	0	0	0	0	71.604	0	323.08	265.286	0	14.28	4.521	4.521	4.521	4.521	4.582	0	0	0	0	0	0	0	0	0	337.36	0.002	0	0
DPE	0	0	0.013	0	5.355	0	0	0	0	0	0	0	0	0	0	0.046	0	0	0	0	0	0	0.001	0.059	0	0	0	0	0	5.355	4.18	1.116	0	0	0	0
PLASTIC	0	0	0.017	0	0	0	0	0	0	0	0	0	1.505	0	0	0.062	7.14	0	0	0	0	0	0.001	0.079	0	0	0	0	0	7.14	5.573	1.488	0	0	0	0
CMC	0	0	0	0	0	0	0	0	0	0	0	0	6.877	6.877	0	0	0	0	0	0	0	0	0	0	0	0	0	0	0	0	0	0	0	0	0	0
SODIUM	0	0	0	0	0	0	0	0	0	0	0	0	0.623	0.623	0	0	0	0	0	0	0	0	0	0	0	0	0	0	0	0	0	0	0	0	0	0
NAILS	1.65	1.82	0	3.47	0	0	0	0	0	0	0	0	0	0	3.47	0	0	0	0	0	0	0	0	0	0	0	0	0	0	0	0	0	3.47	0	0	0
Total Average Flow lb/hr	314.13	93.2	89.88	3.47	5.355	31.238	17.85	1153.11	1109.826	43.284	2.064	0	999.999	7.5	407.33	331.966	7.14	17.85	3334.521	3334.521	2668.522	173.241	337.584	1998.138	333.001	328.712	39.816	333.001	328.712	12.495	9.753	2.604	425.18	13186.96	900.017	836.819
Notes	1	1	1										1		1	1	1	1	1	1	1	1	1										1	1		

1 - Wood is composed of 20 wt% water, see Assumption 3

15

NO.	DATE	DESCRIPTION	DR	CK	DL	PE	APPD
1		IDS COMMENT REVISIONS	NL	BH	RB	NW	DJ
0	7-2-04	ISSUED FOR DESIGN	JG	BH	RB	NW	DJ

QUALITY ☐ LEVEL 1 ☒ LEVEL 2 ☐ LEVEL 3 ☐ ALL

BECHTEL PARSONS BLUE GRASS
A Joint Venture of Bechtel National, INC. and Parsons Infrastructure & Technology Group Inc.

DOD PROGRAM MANAGER FOR ASSEMBLED CHEMICAL WEAPONS ASSESSMENT EDGEWOOD, MARYLAND

US ARMY ENGINEERING AND SUPPORT CENTER, HUNTSVILLE HUNTSVILLE, ALABAMA

GENERAL ATOMICS

BLUE GRASS CHEMICAL AGENT DESTRUCTION PILOT PLANT PROJECT (BGCAPP)
RICHMOND, KENTUCKY

CONTRACT NO. DAAA09-03-D-0023

DUNNAGE SHREDDING & HANDLING SYSTEM
WOOD
PROCESS FLOW DIAGRAM

PROFESSIONAL STAMP

DRAWING NUMBER 24915-07-M5-DWS-00001 | SHEET 7 OF 9 | REV 1

bgcapp_d3.dwg

VX Campaign (Average Rates)	Rockets	Projectiles	Total
Process Rate (md/hr)	29.8	19	48.8

Stream Number:	107	114	305	306	307	308	311			313	314	315	316	319	320	
Stream Description	Wood / Dunnage from RSM	Wood / Dunnage from PHS	Wood Flour to Hydropulper	Metals from Magnetic Separator	DPE Suits	Liquid Nitrogen to Cryocooler	Non-process Liquid Waste (Spent Oil) to Hydropulper	Spent Decon Fluid (2.25% Bleach)	Spent Decon Fluid (2.25% Bleach) to Storage	Spent Decon Fluid (2.25% Bleach) to Hydropulper	50% Sodium Hydroxide Feed to Hydropulper	Process Water to Hydropulper	Dunnage Slurry to SCWO	CMC to Hydropulper	Wood Pallet	Wood, Misc Wood, Trash, Debris, Protective Clothing to Storage
Temperature F	68	68	68		68	-300	68	68	68	68	68	68	68	68	68	68
Pressure psi	14.23	14.23	14.23	14.23	14.23	48	14.23	14.23	14.23	14.23	14.23		14.23	14.23	14.23	14.23
Instantaneous Flow lb/hr (ACFM)			1202.86636				328.424			582.60264	33.19236	0				
Density lb/cuft	82.464	82.464	82.541		179.393	47.046	48.212	61.982	61.982	61.982	95.394		69.335	57.289	82.464	82.453
Viscosity cP																
Molecular Weight																
Enthalpy MMBtu/hr	-1.984	-0.422	-0.472		-0.002	-0.007	-0.015	-10.601	-10.31	-0.291	-0.014		-5.874	-0.02	-2.405	-2.063
Mass Flow Liquid, Gas lb/hr																
N2	0	0	0	0	0	42.7	0	0	0	0	0	0	0	0	0	0
O2	0	0	0	0	0	0	0	0	0	0	0	0	0	0	0	0
WATER	75.1	15.96	17.675	0	0	0	0	1540.77	1498.46	42.31	1.233	0	725.599	0	91.06	78.265
NAOH	0	0	0	0	0	0	0	0	0	0	1.233	0	0	0	0	0
NACLO	0	0	0	0	0	0	0	35.47	34.496	0.974	0	0	0.974	0	0	0
C14H28	0	0	0	0	0	0	24.4	0	0	0	0	0	24.4	0	0	0
NACL	0	0	0	0	0	0	0	0	0	0	0	0	39.977	0	0	0
NA2SO4	0	0	0	0	0	0	0	0	0	0	0	0	86.058	0	0	0
CO2	0	0	0	0	0	0	0	0	0	0	0	0	0.853	0	0	0
NANO2	0	0	0	0	0	0	0	0	0	0	0	0	11.12	0	0	0
NANO3	0	0	0	0	0	0	0	0	0	0	0	0	5.975	0	0	0
SODIUM FORMATE	0	0	0	0	0	0	0	0	0	0	0	0	11.618	0	0	0
SODIUM ACETATE	0	0	0	0	0	0	0	0	0	0	0	0	12.116	0	0	0
GLYCEROL	0	0	0	0	0	0	0	0	0	0	0	0	0.913	0	0	0
Mass Flow Solid lb/hr																
WOOD	300.38	63.84	71.656	0	0	0	0	0	0	0	0	0	71.098	0	364.22	312.081
DPE	0	0	0.015	0	7.32	0	0	0	0	0	0	0	0	0	0	0.066
PLASTIC	0	0	0.02	0	0	0	0	0	0	0	0	0	1.798	0	0	0.087
CMC	0	0	0	0	0	0	0	0	0	0	0	0	6.877	6.877	0	0
SODIUM	0	0	0	0	0	0	0	0	0	0	0	0	0.623	0.623	0	0
NAILS	1.99	2.38	0	4.37	0	0	0	0	0	0	0	0	0	0	4.37	0
Total Average Flow lb/hr	377.47	82.18	89.366	4.37	7.32	42.7	24.4	1576.24	1532.956	43.284	2.466	0	999.999	7.5	459.65	390.499
Notes	1	1	1										1		1	1

Stream Number:	321	322	323	324	325	326	327	328	329	330	331	332	333 & 338	335		336	337	339	350	510
Stream Description	Misc Plastic from Non-munition Sources	Misc Wood, Trash, Debris, Protective Clothing	Vent Two Roll Shredder	Vent Hammer Mill	Vent Wood Micronizer Inlet	Vent Wood Micronizer Cyclone	Vent Wood Flour Storage Tank	Vent Plastic / Rubber Granulator	Vent Plastic / Rubber Cyclone	Vent Plastic / Rubber Storage Bin	Nitrogen Vent to Baghouse	CMC Vent	Vent Hydropulper	Total DPE Suits and Misc Plastic from Non-munition Sources	DPE Suits and Misc Plastic from Non-munition Sources to Storage	DPE Suits and Misc Plastic from Non-munition Sources to Hydropulper	Total Wood and Misc Wood, Trash, Debris, Protective Clothing	Vent Gas to Carbon Beds	Total Liquids to Hydropulper	Energetic Hydrolysate Required to Hydropulper
Temperature F	68	68	68	68	68	68	68	68	68	68	44.9	68	68	68	68	68	68	68	118.3	122
Pressure psi	14.23	14.23	14.23	14.23	14.23	14.23	14.23	14.23	14.23	14.23	48	14.23	14.23	14.23	14.23	14.23	14.23	14.23	14.23	14.23
Instantaneous Flow lb/hr (ACFM)																				11170.0771
Density lb/cuft	68.748	82.464	0.072	0.072	0.072	0.075	0.073	0.072	0.072	0.072	0.249	0.072	0.072	93.449	93.449	93.449	82.464	0.072	67.487	68.766
Viscosity cP			0.018	0.018	0.018	0.018	0.018	0.018	0.018	0.018	0.017	0.018	0.018					0.018		
Molecular Weight			28.631	28.631	28.633	28.679	28.662	28.626	28.623	28.632	28.013	28.623	28.632					28.621		
Enthalpy MMBtu/hr	-0.007	-0.129	-0.288	-0.288	-0.236	-0.039	-0.052	-0.157	-0.026	-0.026	0	-0.026	-0.026	-0.01	-0.008	-0.002	-2.534	-1.033	-5.342	-5.022
Mass Flow Liquid, Gas lb/hr																				
N2	0	0	2520.377	2520.377	2016.302	127.699	252.038	1512.226	252.038	247.749	51.278	252.038	247.749	0	0	0	0	9999.87	0	0
O2	0	0	765.667	765.667	612.534	38.794	76.567	459.4	76.567	76.567	0	76.567	76.567	0	0	0	0	3024.895	0	0
WATER	0	4.88	43.956	43.956	35.165	2.227	4.395	26.374	4.396	4.396	0	4.396	4.396	0	0	0	95.94	173.655	707.44	663.898
NAOH	0	0	0	0	0	0	0	0	0	0	0	0	0	0	0	0	0	0	1.233	0
NACLO	0	0	0	0	0	0	0	0	0	0	0	0	0	0	0	0	0	0	0.974	0
C14H28	0	0	0	0	0	0	0	0	0	0	0	0	0	0	0	0	0	0	24.4	0
NACL	0	0	0	0	0	0	0	0	0	0	0	0	0	0	0	0	0	0	38.174	38.174
NA2SO4	0	0	0	0	0	0	0	0	0	0	0	0	0	0	0	0	0	0	86.058	86.058
CO2	0	0	0	0	0	0	0	0	0	0	0	0	0	0	0	0	0	0	0	0
NANO2	0	0	0	0	0	0	0	0	0	0	0	0	0	0	0	0	0	0	11.12	11.12
NANO3	0	0	0	0	0	0	0	0	0	0	0	0	0	0	0	0	0	0	5.975	5.975
SODIUM FORMATE	0	0	0	0	0	0	0	0	0	0	0	0	0	0	0	0	0	0	11.618	11.618
SODIUM ACETATE	0	0	0	0	0	0	0	0	0	0	0	0	0	0	0	0	0	0	12.116	12.116
GLYCEROL	0	0	0	0	0	0	0	0	0	0	0	0	0	0	0	0	0	0	0.913	0.913
Mass Flow Solid lb/hr																				
WOOD	0	19.52	5.142	5.142	5.142	5.142	5.212	0	0	0	0	0	0	0	0	0	383.74	0.003	0	0
DPE	0	0	0	0	0	0	0.001	0.081	0	0	0	0	0	7.32	5.906	1.334	0	0	0	0
PLASTIC	9.76	0	0	0	0	0	0.001	0.107	0	0	0	0	0	9.76	7.874	1.778	0	0	0	0
CMC	0	0	0	0	0	0	0	0	0	0	0	0	0	0	0	0	0	0	0	0
SODIUM	0	0	0	0	0	0	0	0	0	0	0	0	0	0	0	0	0	0	0	0
NAILS	0	0	0	0	0	0	0	0	0	0	0	0	0	0	0	0	4.37	0	0	0
Total Average Flow lb/hr	9.76	24.4	3335.142	3335.142	2669.143	173.862	338.214	1998.188	333.001	328.712	51.278	333.001	328.712	17.08	13.78	3.112	484.05	13198.42	900.021	829.872
Notes	1	1	1	1	1	1	1										1	1		

1 - Wood is composed of 20 wt% water, see Assumption 3

16

NO.	DATE	DESCRIPTION	DR	CK	DL	PE	APPD
17		IDS COMMENT REVISIONS	NL	BH	RB	NW	DJ
0	7-2-04	ISSUED FOR DESIGN	JG	BH	RB	NW	DJ

QUALITY ☐ LEVEL 1 ☒ LEVEL 2 ☐ LEVEL 3 ☐ ALL

BECHTEL PARSONS BLUE GRASS
A Joint Venture of Bechtel National, INC. and Parsons Infrastructure & Technology Group Inc.

DOD PROGRAM MANAGER FOR ASSEMBLED CHEMICAL WEAPONS ASSESSMENT EDGEWOOD, MARYLAND

US ARMY ENGINEERING AND SUPPORT CENTER, HUNTSVILLE HUNTSVILLE, ALABAMA

GENERAL ATOMICS

BLUE GRASS CHEMICAL AGENT DESTRUCTION PILOT PLANT PROJECT (BGCAPP)
RICHMOND, KENTUCKY

CONTRACT NO. DAAA09-03-D-0023

DUNNAGE SHREDDING & HANDLING SYSTEM
WOOD
PROCESS FLOW DIAGRAM

PROFESSIONAL STAMP

DRAWING NUMBER 24915-07-M5-DWS-00001 | SHEET 8 OF 9 | REV 1

bgcapp_d3.dwg

H Campaign (Average Rates)	Total
Process Rate (md/hr)	17.1

Stream Number:	107	114	305	306	307	308	311			313	314	315	316	319	320		321	322	323	324	325	326	327	328	329	330	331	332	333 & 338	335		336	337	339	350	510
Stream Description	Wood / Dunnage from RSM	Wood / Dunnage from PHS	Wood Flour to Hydropulper	Metals from Magnetic Separator	DPE Suits	Liquid Nitrogen to Cryocooler	Non-process Liquid Waste (Spent Oil) to Hydropulper	Spent Decon Fluid (2.25% Bleach)	Spent Decon Fluid (2.25% Bleach) to Storage	Spent Decon Fluid (2.25% Bleach) to Hydropulper	50% Sodium Hydroxide Feed to Hydropulper	Process Water to Hydropulper	Dunnage Slurry to SCWO	CMC to Hydropulper	Wood Pallet	Wood, Misc Wood, Trash, Debris, Protective Clothing to Storage	Misc Plastic from Non-munition Sources	Misc Wood, Trash, Debris, Protective Clothing	Vent Two Roll Shredder	Vent Hammer Mill	Vent Wood Micronizer Inlet	Vent Wood Micronizer Cyclone	Vent Wood Flour Storage Tank	Vent Plastic / Rubber Granulator	Vent Plastic / Rubber Cyclone	Vent Plastic / Rubber Storage Bin	Nitrogen Vent to Baghouse	CMC Vent	Vent Hydropulper	Total DPE Suits and Misc Plastic from Non-munition Sources	DPE Suits and Misc Plastic from Non-munition Sources to Storage	DPE Suits and Misc Plastic from Non-munition Sources to Hydropulper	Total Wood and Misc Wood, Trash, Debris, Protective Clothing	Vent Gas to Carbon Beds	Total Liquids to Hydropulper	Energetic Hydrolysate Required to Hydropulper
Temperature F		68	68		68	-300	68	68	68	68	68	68	68	68	68	68	68	68	68	68	68	68	68	68	68	68	60	68	68	68		68	68	68	116.6	122
Pressure psi		14.23	14.23	14.23	14.23	48	14.23	14.23	14.23	14.23	14.23		14.23	14.23	14.23	14.23	14.23	14.23	14.23	14.23	14.23	14.23	14.23	14.23	14.23	14.23	48	14.23	14.23	14.23		14.23	14.23	14.23	14.23	14.23
Instantaneous Flow lb/hr (ACFM)			1082.66856				115.083			1150.83	63.1274	0																								10867.6848
Density lb/cuft		82.466	82.476		179.393	47.046	48.212	61.982	61.982	61.982	95.394		66.928	57.289	82.466	62.324	68.748	82.464	0.072	0.072	0.072	0.072	0.072	0.072	0.072	0.072	0.241	0.072	0.072	93.449		93.449	82.466	0.072	65.241	65.727
Viscosity cP																			0.018	0.018	0.018	0.018	0.018	0.018	0.018	0.018	0.017	0.018	0.018					0.018		
Molecular Weight																			28.625	28.625	28.625	28.642	28.635	28.624	28.623	28.632	28.013	28.623	28.632					28.623		
Enthalpy MMBtu/hr		-0.379	-0.425		-0.001	-0.003	-0.005	-3.715	-3.14	-0.575	-0.028		-6.208	-0.02	-0.379	0	-0.003	-0.045	-0.266	-0.266	-0.214	-0.018	-0.031	-0.157	-0.026	-0.026	0	-0.026	-0.026	-0.003		-0.003	-0.425	-1.033	-5.718	-5.11
Mass Flow Liquid, Gas lb/hr																																				
N2		0	0	0	0	14.963	0	0	0	0	0	0	0	0	0	0	0	0	2520.377	2520.377	2016.302	127.699	252.038	1512.226	252.038	247.749	23.541	252.038	247.749	0	0	0	0	9972.132	0	0
O2		0	0	0	0	0	0	0	0	0	0	0	0	0	0	0	0	0	765.667	765.667	612.534	38.794	76.567	459.4	76.567	76.567	0	76.567	76.567	0	0	0	0	3024.895	0	0
WATER		14.36	16.07	0	0	0	0	539.9	456.324	83.576	2.345	0	809.31	0	14.36	0.001	0	1.71	43.956	43.956	35.165	2.227	4.395	26.374	4.396	4.396	0	4.396	4.396	0	0	0	16.07	173.655	792.32	706.4
NAOH		0	0	0	0	0	0	0	0	0	2.345	0	0	0	0	0	0	0	0	0	0	0	0	0	0	0	0	0	0	0	0	0	0	0	2.345	0
NACLO		0	0	0	0	0	0	12.43	10.506	1.924	0	0	1.924	0	0	0	0	0	0	0	0	0	0	0	0	0	0	0	0	0	0	0	0	0	1.924	0
C14H28		0	0	0	0	0	8.55	0	0	0	0	0	8.55	0	0	0	0	0	0	0	0	0	0	0	0	0	0	0	0	0	0	0	0	0	8.55	0
NACL		0	0	0	0	0	0	0	0	0	0	0	27.974	0	0	0	0	0	0	0	0	0	0	0	0	0	0	0	0	0	0	0	0	0	24.545	24.545
NA2SO4		0	0	0	0	0	0	0	0	0	0	0	55.549	0	0	0	0	0	0	0	0	0	0	0	0	0	0	0	0	0	0	0	0	0	55.55	55.55
CO2		0	0	0	0	0	0	0	0	0	0	0	1.623	0	0	0	0	0	0	0	0	0	0	0	0	0	0	0	0	0	0	0	0	0	0	0
NANO2		0	0	0	0	0	0	0	0	0	0	0	4.521	0	0	0	0	0	0	0	0	0	0	0	0	0	0	0	0	0	0	0	0	0	4.521	4.521
NANO3		0	0	0	0	0	0	0	0	0	0	0	0	0	0	0	0	0	0	0	0	0	0	0	0	0	0	0	0	0	0	0	0	0	0	0
SODIUM FORMATE		0	0	0	0	0	0	0	0	0	0	0	15.502	0	0	0	0	0	0	0	0	0	0	0	0	0	0	0	0	0	0	0	0	0	15.502	15.502
SODIUM ACETATE		0	0	0	0	0	0	0	0	0	0	0	0.888	0	0	0	0	0	0	0	0	0	0	0	0	0	0	0	0	0	0	0	0	0	0.888	0.888
GLYCEROL		0	0	0	0	0	0	0	0	0	0	0	0	0	0	0	0	0	0	0	0	0	0	0	0	0	0	0	0	0	0	0	0	0	0	0
Mass Flow Solid lb/hr																																				
WOOD		57.46	64.3	0	0	0	0	0	0	0	0	0	63.238	0	57.46	0	0	6.84	0.862	0.862	0.862	0.862	0.862	0	0	0	0	0	0	0	0	0	64.3	0	0	0
DPE		0	0.028	0	2.565	0	0	0	0	0	0	0	0	0	0	0	0	0	0	0	0	0	0	0.028	0	0	0	0	0	2.565	0	2.537	0	0	0	0
PLASTIC		0	0.038	0	0	0	0	0	0	0	0	0	3.42	0	0	0	3.42	0	0	0	0	0	0	0.038	0	0	0	0	0	3.42	0	3.382	0	0	0	0
CMC		0	0	0	0	0	0	0	0	0	0	0	6.877	6.877	0	0	0	0	0	0	0	0	0	0	0	0	0	0	0	0	0	0	0	0	0	0
SODIUM		0	0	0	0	0	0	0	0	0	0	0	0.623	0.623	0	0	0	0	0	0	0	0	0	0	0	0	0	0	0	0	0	0	0	0	0	0
NAILS		2.14	0	2.14	0	0	0	0	0	0	0	0	0	0	2.14	0	0	0	0	0	0	0	0	0	0	0	0	0	0	0	0	0	2.14	0	0	0
Total Average Flow lb/hr	0	73.96	80.436	2.14	2.565	14.963	8.55	552.33	466.83	85.5	4.69	0	999.999	7.5	73.96	0.001	3.42	8.55	3330.862	3330.862	2664.863	169.582	333.862	1998.066	333.001	328.712	23.541	333.001	328.712	5.985	0	5.919	82.51	13170.68	906.145	807.406
Notes		1	1										1		1	1	1	1	1	1	1	1	1										1	1			

1 - Wood is composed of 20 wt% water, see Assumption 3

17

NO.	DATE	DESCRIPTION	DR	CK	DL	PE	APPD
17		IDS COMMENT REVISIONS	NL	BH	RB	NW	DJ
0	7-2-04	ISSUED FOR DESIGN	JG	BH	RB	NW	DJ

QUALITY ☐ LEVEL 1 ☒ LEVEL 2 ☐ LEVEL 3 ☐ ALL

BECHTEL PARSONS BLUE GRASS
A Joint Venture of Bechtel National, INC. and Parsons Infrastructure & Technology Group Inc.

DOD PROGRAM MANAGER FOR ASSEMBLED CHEMICAL WEAPONS ASSESSMENT EDGEWOOD, MARYLAND

US ARMY ENGINEERING AND SUPPORT CENTER, HUNTSVILLE HUNTSVILLE, ALABAMA

GENERAL ATOMICS

BLUE GRASS CHEMICAL AGENT DESTRUCTION PILOT PLANT PROJECT (BGCAPP)
RICHMOND, KENTUCKY

CONTRACT NO. DAAA09-03-D-0023

DUNNAGE SHREDDING & HANDLING SYSTEM
WOOD
PROCESS FLOW DIAGRAM

DRAWING NUMBER 24915-07-M5-DWS-00001 | SHEET 9 OF 9 | REV 1

PROFESSIONAL STAMP

bgcapp_d3.dwg

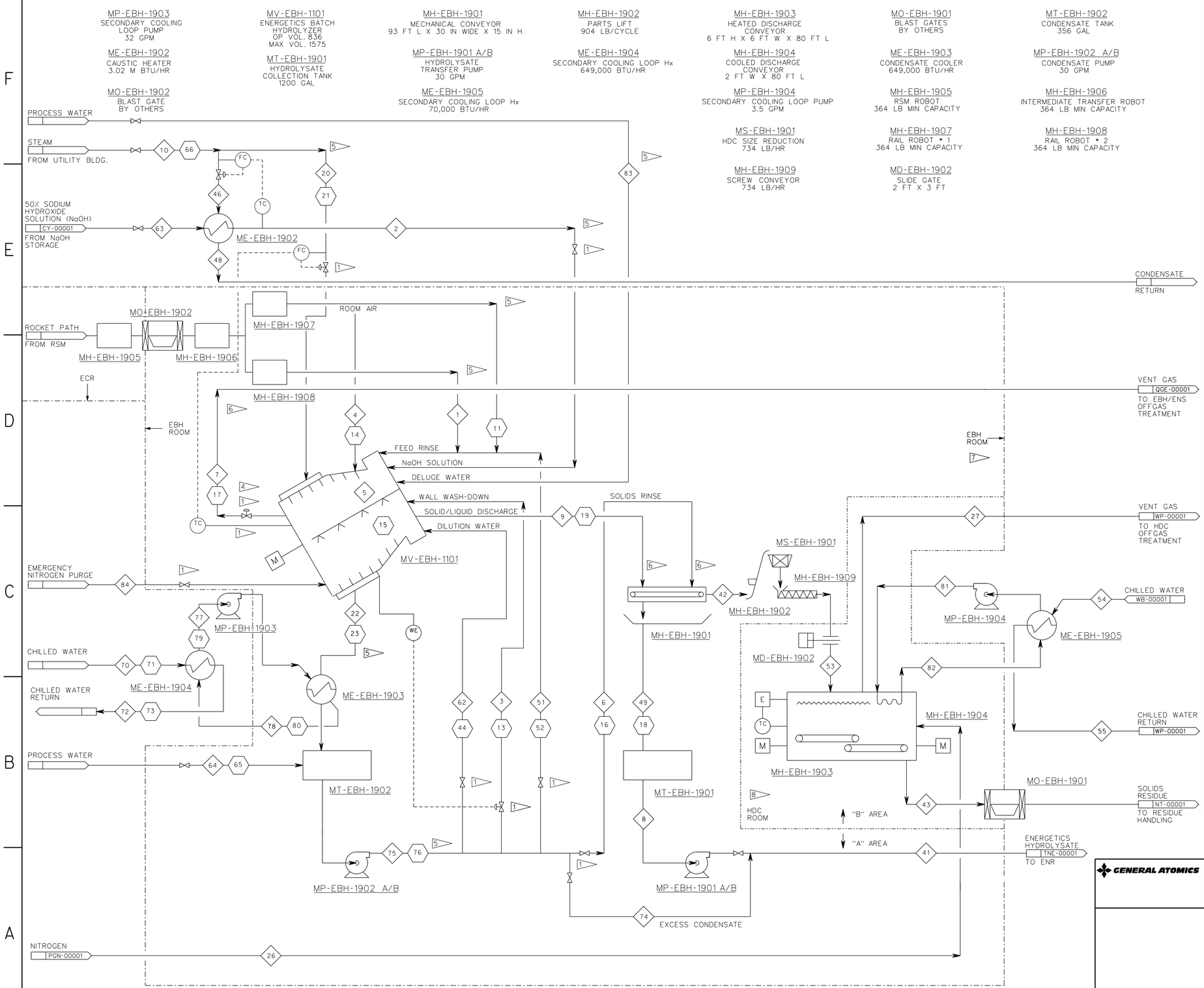

THIS DRAWING SUPERSEDES DWG NO 24915-07-M5-TCEH-0001

NOTES:

1. ITEMS REPEATED 8 TIMES PER TRAIN.
2. XX REPRESENTS M&EB STREAM NUMBERS DURING ROCKET MOTOR PROCESSING.
3. XX REPRESENTS M&EB STREAM NUMBERS DURING ROCKET WARHEAD AND FUSE PROCESSING.
4. 2 POSITION DAMPER MIN FLOW FOR PROCESSING ROCKET MOTORS OR IDLE. HIGH FLOW FOR PROCESSING WARHEADS.
5. LINE SPLITS TO 8 EBHS AT THIS POINT. ONLY 1 OF 8 EBHS IS SHOWN.
6. LINES FROM 8 EBHS COMBINE AT THIS POINT. ONLY 1 OF 8 EBHS IS SHOWN.
7. ITEMS IN EBH AND ECR ROOMS ARE QUALITY LEVEL 1.
8. ITEMS IN HDC ROOM ARE QUALITY LEVEL 2.
9. ITEMS OUTSIDE THE HDC & EBH ROOMS ARE QUALITY LEVEL 3.
10. ONLY ONE EQUIPMENT NUMBER FOR EACH EQUIPMENT LOCATION IS SHOWN. FOR COMPLETE LIST SEE SHEET 2.

Blayne Monen
Issued
2004/07/09

NO.	DATE	DESCRIPTION	DR	CK	DL	PE	APPD
0		ISSUED FOR DESIGN	NL	DG	AS	NW	DJ

QUALITY ☐ LEVEL 1 ☐ LEVEL 2 ☐ LEVEL 3 ☒ ALL

BECHTEL PARSONS BLUE GRASS
A Joint Venture of Bechtel National, INC. and Parsons Infrastructure & Technology Group Inc.

DOD PROGRAM MANAGER FOR ASSEMBLED CHEMICAL WEAPONS ASSESSMENT EDGEWOOD, MARYLAND

US ARMY ENGINEERING AND SUPPORT CENTER, HUNTSVILLE HUNTSVILLE, ALABAMA

GENERAL ATOMICS

BLUE GRASS CHEMICAL AGENT DESTRUCTION PILOT PLANT PROJECT (BGCAPP)
RICHMOND, KENTUCKY

CONTRACT NO. DAAA09-03-D-0023

ENERGETICS BATCH HYDROLYZER PROCESS FLOW DIAGRAM

DRAWING NUMBER 24915-07-M5-EBH-00001 | SHEET 1 OF 9 | REV 0

PROFESSIONAL STAMP

BGCAPP_D3.BDR

EQUIPMENT NUMBERS FOR ALL EQUIPMENT ASSOCIATED WITH ENERGETICS BATCH HYDROLYZER AND HEATED DISCHARGE CONVEYOR

BLAST GATE
MO-EBH-1901
MO-EBH-2901
MO-EBH-1902
MO-EBH-2902

CAUSTIC HEATER
ME-EBH-1902
ME-EBH-2902

SECONDARY COOLING LOOP HX
ME-EBH-1904
ME-EBH-2904
ME-EBH-1905
ME-EBH-2905

SECONDARY COOLING LOOP PUMP
MP-EBH-1903
MP-EBH-2903
MP-EBH-1904
MP-EBH-2904

CONDENSATE COLLECTION TANK
MT-EBH-1902
MT-EBH-2902

CONDENSATE COOLER
ME-EBH-1903
ME-EBH-2903

CONDENSATE PUMP
MP-EBH-1902A
MP-EBH-1902B
MP-EBH-2902A
MP-EBH-2902B

COOLED DISCHARGE CONVEYOR
MH-EBH-1904
MH-EBH-2904

SLIDE GATE
MD-EBH-1902
MD-EBH-2902

ENERGETICS BATCH HYDROLYZER
MV-EBH-1101
MV-EBH-1201
MV-EBH-1301
MV-EBH-1401
MV-EBH-1501
MV-EBH-1601
MV-EBH-1701
MV-EBH-1801
MV-EBH-2101
MV-EBH-2201
MV-EBH-2301
MV-EBH-2401
MV-EBH-2501
MV-EBH-2601
MV-EBH-2701
MV-EBH-2801

HDC SIZE REDUCTION
MS-EBH-1901
MS-EBH-2901

PARTS LIFT
MH-EBH-1902
MH-EBH-2902

HEATED DISCHARGE CONVEYOR
MH-EBH-1903
MH-EBH-2903

HYDROLYSATE COLLECTION TANK
MT-EBH-1901
MT-EBH-2901

HYDROLYSATE TRANSFER PUMP
MP-EBH-1901A
MP-EBH-1901B
MP-EBH-2901A
MP-EBH-2901B

UNLOAD CONVEYOR
MH-EBH-1901
MH-EBH-2901

RAIL ROBOT 1
MH-EBH-1907
MH-EBH-2907

RAIL ROBOT 2
MH-EBH-1908
MH-EBH-2908

RSM ROBOT
MH-EBH-1905
MH-EBH-2905

INTERMEDIATE TRANSFER ROBOT
MH-EBH-1906
MH-EBH-2906

SCREW CONVEYOR
MH-EBH-1909
MH-EBH-2909

Blayne Monen
Issued
2004/07/09

NO.	DATE	DESCRIPTION	DR	CK	DL	PE	APPD
0		ISSUED FOR DESIGN	NL	DG	AS	NW	DJ

QUALITY ☐ LEVEL 1 ☐ LEVEL 2 ☐ LEVEL 3 ☒ ALL

BECHTEL PARSONS BLUE GRASS
A Joint Venture of Bechtel National, INC. and Parsons Infrastructure & Technology Group Inc.

DOD PROGRAM MANAGER FOR ASSEMBLED CHEMICAL WEAPONS ASSESSMENT EDGEWOOD, MARYLAND

US ARMY ENGINEERING AND SUPPORT CENTER, HUNTSVILLE HUNTSVILLE, ALABAMA

GENERAL ATOMICS

BLUE GRASS CHEMICAL AGENT DESTRUCTION PILOT PLANT PROJECT (BGCAPP)
RICHMOND, KENTUCKY

CONTRACT NO. DAAA09-03-D-0023

ENERGETICS BATCH HYDROLIZER PROCESS FLOW DIAGRAM

DRAWING NUMBER 24915-07-M5-EBH-00001 | SHEET 2 OF 9 | REV 0

THIS DRAWING SUPERSEDES DWG NO 24915-07-M5-TCEH-0001

PROFESSIONAL STAMP

bgcapp_d3.dwg

CASE 1 – EBH M55 ROCKETS – RESULTS FOR ONE RM/WH EBH PAIR AT PEAK PROCESSING RATE

Stream Number:	1	2	3	4	5	6	7	8	9	10	11
Stream Description	Sheared RM Feed	Heated Fresh Caustic Feed 50% NaOH	RM EBH Make-up Water (Wall Wash)	Air Supply RM EBH	Representative Contents Inside RM EBH	Rinse Water RM Solids Discharge	Vent Discharge from RM EBH	Hydrolysate leaving Tank	Discharge from RM EBH	Steam Suppy for RM	Sheared WH Feed
Temperature F	77	248	131	85	248	131	185	222.3	248	300	77
Pressure psi	14.23	14.23	14.23	14.23	14.23	14.23	14.23	14.23	14.23	66.23	14.23
Instantaneous Flow gpm (ACFM)		17.051	1.000	(406.522)		4.000	(846.022)	30.000	6.599	(180.071)	
Density lb/cuft		89.87	61.535	0.069	0.227	61.535	0.049	73.307	70.552	0.15	
Viscosity cP				0.018	0.013		0.018			0.014	
Molecular Weight				28.392	18.037		23.923			18.015	
Enthalpy MMBtu/hr	-0.294	-17.471	-3.386	-0.294	-28.689	-3.386	-4.847	-26.333	-4.921	-9.205	-0.009
Mass Flow Liquids, Gases lb/hr											
N2	0	0	0	1252	0	0	1252	0	0	0	0
O2	0	0	0	380.5	0.088	0	380.588	0	0	0	0
N2O	0	0	0	0	0	0	0	0.038	0	0	0
H2	0	0	0	0	0	0	0	0	0	0	0
H2O	0	1536.431	500	50.5	3454.671	500	853.043	2888.383	541.277	1620.642	0
PROPYLENE GLYCOL	0	0	0	0	0	0	0	0	0	0	0
AMMONIA	0	0	0	0	0	0	0	0.108	0	0	0
NITRODIPHENYLAMINE	7.87	0	0	0	2.007	0	0.002	2.004	0.409	0	0
NITROSODIPHENYLAMINE	0	0	0	0	1.092	0	0	1.091	0.223	0	0
NITROPHENOL	0	0	0	0	6.081	0	0.004	6.068	1.24	0	0
NAOH	0	1536.431	0	0	1151.414	0	0	698.722	234.994	0	0
NITROCELLULOSE	277.92	0	0	0	0	0	0	0	0	0	0
NITROGLYCERIN	110.24	0	0	0	0	0	0.092	0	0	0	0
TRIACETIN	45.86	0	0	0	0	0	0.069	0	0	0	0
DIETHYLPHTHALATE	12.04	0	0	0	3.61	0	0.011	3.594	0.736	0	0
DIMETHYLPHTHALATE	0	0	0	0	7.361	0	0.024	7.289	1.497	0	0
ETHANOL	0	0	0	0	1.746	0	1.462	0.073	0.058	0	0
LEAD STEARATE	9.26	0	0	0	0	0	0	0	0	0	0
SODIUM STEARATE	0	0	0	0	7.332	0	0	7.332	1.496	0	0
LEAD OXIDE	0	0	0	0	2.669	0	0	2.669	0.545	0	0
PCB	0.16	0	0	0	0.16	0	0	0	0.16	0	0.25
TETRYL	0	0	0	0	0	0	0	0	0	0	0
RDX	0	0	0	0	0	0	0	0	0	0	45.22
TNT	0	0	0	0	0	0	0	0	0	0	30.14
ALUMINUM	0	0	0	0	0	0	0	0	0	0	255.6
NANO2	0	0	0	0	202.033	0	0	232.258	41.233	0	0
NANO3	0	0	0	0	113.295	0	0	113.295	23.123	0	0
NACHO2	0	0	0	0	160.208	0	0	246.866	32.697	0	0
NAC2H3O2	0	0	0	0	244.897	0	0	255.783	49.981	0	0
GLYCEROL	0	0	0	0	19.326	0	0.01	19.297	3.942	0	0
NAALO2	0	0	0	0	0	0	0	776.515	0	0	0
ACETONE	0	0	0	0	0	0	0	0	0	0	0
BENZENE	0	0	0	0	0	0	0	0	0	0	0
1,2 DICHLOROETHANE	0	0	0	0	0	0	0	0	0	0	0
ETHYLBENZENE	0	0	0	0	0	0	0	0	0	0	0
METHYLENE CHLORIDE	0	0	0	0	0	0	0	0	0	0	0
STYRENE	0	0	0	0	0	0	0	0	0	0	0
TOLUENE	0	0	0	0	0	0	0	0	0	0	0
2-BUTANONE	0	0	0	0	0	0	0	0	0	0	0
XYLENE	0	0	0	0	0	0	0	0	0	0	0
CHLOROETHANE	0	0	0	0	0	0	0	0	0	0	0
2-HEXANONE	0	0	0	0	0	0	0	0	0	0	0
CHLOROFORM	0	0	0	0	0	0	0	0	0	0	0
1,2 DICHLOROPROPANE	0	0	0	0	0	0	0	0	0	0	0
VINYL CHLORIDE	0	0	0	0	0	0	0	0	0	0	0
PHENOL	0	0	0	0	0	0	0	0	0	0	0
BENZOIC ACID	0	0	0	0	0	0	0	0	0	0	0
FLUORENE	0	0	0	0	0	0	0	0	0	0	0
HEXACHLOROCYCLOPENTADIENE	0	0	0	0	0	0	0	0	0	0	0
2-METHYLNAPHTHALENE	0	0	0	0	0	0	0	0	0	0	0
2-METHYLPHENOL	0	0	0	0	0	0	0	0	0	0	0
4-METHYLPHENOL	0	0	0	0	0	0	0	0	0	0	0
NAPHTHALENE	0	0	0	0	0	0	0	0	0	0	0
2,4 DIMETHYLPHENOL	0	0	0	0	0	0	0	0	0	0	0
Mass Flow Solids lb/hr											
STEEL	302.09	0	0	0	302.09	0	0	0	302.09	0	81.6
FIBERGLASS	127.04	0	0	0	127.04	0	0	0	127.04	0	201.35
CELLULOSE ACETATE	22.15	0	0	0	22.15	0	0	0	22.15	0	0
Total Average Flow lb/hr	914.63	3072.862	500	1683	5829.27	500	2487.305	5261.385	1384.891	1620.642	614.16
Notes	1				2				2		1

Stream Number:	13	14	15	16	17	18	19	20	21	22	23
Stream Description	WH EBH Make-up Water (Wall Wash)	Air Supply WH EBH	Representative Contents Inside WH EBH	Rinse Water WH Solids Discharge	Vent Discharge from WH EBH	Energetic Hydrolysate Exiting WH EBH	Discharge from WH EBH	Steam Supply to RM EBH	Steam Supply to WH EBH	Condensate from RM EBH	Condensate from WH EBH
Temperature F	118.6	85	242.6	118.6	130	225.1	242.6	300	300	299	299
Pressure psi	14.23	14.23	14.23	14.23	14.23	14.23	14.23	66.23	66.23	66.23	66.23
Instantaneous Flow gpm (ACFM)	1.000	(11315.315)		4.000	(12973.160)	26.096	23.055	(124.129)	(51.915)	2.429	1.016
Density lb/cuft	61.736	0.069	0.099	61.736	0.062	73.147	71.986	0.15	0.15	57.329	57.329
Viscosity cP		0.018	0.014		0.019			0.014	0.014		
Molecular Weight		28.391	15.573		27.688			18.015	18.015		
Enthalpy MMBtu/hr	-3.392	-7.905	-22.383	-3.392	-15.095	-18.029	-14.638	-6.345	-2.654	-7.375	-3.085
Mass Flow Liquids, Gases lb/hr											
N2	0	34883.908	0	0	34883.908	0	0	0	0	0	0
O2	0	10597.067	4.886	0	10601.953	0	0	0	0	0	0
N2O	0	0	6.72	0	6.682	0.038	0.038	0	0	0	0
H2	0	0	28.645	0	28.645	0	0	0	0	0	0
H2O	500	1364.429	2706.533	500	2723.856	1847.106	1347.106	1117.165	467.238	1117.165	467.238
PROPYLENE GLYCOL	0	0	0	0	0	0	0	0	0	0	0
AMMONIA	0	0	14.921	0	14.813	0.108	0.108	0	0	0	0
NITRODIPHENYLAMINE	0	0	1.597	0	0.001	1.595	1.595	0	0	0	0
NITROSODIPHENYLAMINE	0	0	0.869	0	0.001	0.868	0.868	0	0	0	0
NITROPHENOL	0	0	4.836	0	0.009	4.828	4.828	0	0	0	0
NAOH	0	0	463.728	0	0	463.728	463.728	0	0	0	0
NITROCELLULOSE	0	0	0	0	0	0	0	0	0	0	0
NITROGLYCERIN	0	0	0	0	0	0	0	0	0	0	0
TRIACETIN	0	0	0	0	0	0	0	0	0	0	0
DIETHYLPHTHALATE	0	0	2.869	0	0.011	2.858	2.858	0	0	0	0
DIMETHYLPHTHALATE	0	0	5.839	0	0.047	5.792	5.792	0	0	0	0
ETHANOL	0	0	0.226	0	0.212	0.015	0.015	0	0	0	0
LEAD STEARATE	0	0	0	0	0	0	0	0	0	0	0
SODIUM STEARATE	0	0	5.835	0	0	5.835	5.835	0	0	0	0
LEAD OXIDE	0	0	2.125	0	0	2.125	2.125	0	0	0	0
PCB	0	0	0.25	0	0	0	0.25	0	0	0	0
TETRYL	0	0	0	0	0	0	0	0	0	0	0
RDX	0	0	0	0	0	0	0	0	0	0	0
TNT	0	0	0	0	0	0	0	0	0	0	0
ALUMINUM	0	0	0	0	0	0	0	0	0	0	0
NANO2	0	0	191.025	0	0	191.025	191.025	0	0	0	0
NANO3	0	0	90.173	0	0	90.173	90.173	0	0	0	0
NACHO2	0	0	214.169	0	0	214.169	214.169	0	0	0	0
NAC2H3O2	0	0	205.801	0	0	205.801	205.801	0	0	0	0
GLYCEROL	0	0	15.374	0	0.019	15.355	15.355	0	0	0	0
NAALO2	0	0	776.515	0	0	776.515	776.515	0	0	0	0
ACETONE	0	0	0	0	0	0	0	0	0	0	0
BENZENE	0	0	0	0	0	0	0	0	0	0	0
1,2 DICHLOROETHANE	0	0	0	0	0	0	0	0	0	0	0
ETHYLBENZENE	0	0	0	0	0	0	0	0	0	0	0
METHYLENE CHLORIDE	0	0	0	0	0	0	0	0	0	0	0
STYRENE	0	0	0	0	0	0	0	0	0	0	0
TOLUENE	0	0	0	0	0	0	0	0	0	0	0
2-BUTANONE	0	0	0	0	0	0	0	0	0	0	0
XYLENE	0	0	0	0	0	0	0	0	0	0	0
CHLOROETHANE	0	0	0	0	0	0	0	0	0	0	0
2-HEXANONE	0	0	0	0	0	0	0	0	0	0	0
CHLOROFORM	0	0	0	0	0	0	0	0	0	0	0
1,2 DICHLOROPROPANE	0	0	0	0	0	0	0	0	0	0	0
VINYL CHLORIDE	0	0	0	0	0	0	0	0	0	0	0
PHENOL	0	0	0	0	0	0	0	0	0	0	0
BENZOIC ACID	0	0	0	0	0	0	0	0	0	0	0
FLUORENE	0	0	0	0	0	0	0	0	0	0	0
HEXACHLOROCYCLOPENTADIENE	0	0	0	0	0	0	0	0	0	0	0
2-METHYLNAPHTHALENE	0	0	0	0	0	0	0	0	0	0	0
2-METHYLPHENOL	0	0	0	0	0	0	0	0	0	0	0
4-METHYLPHENOL	0	0	0	0	0	0	0	0	0	0	0
NAPHTHALENE	0	0	0	0	0	0	0	0	0	0	0
2,4 DIMETHYLPHENOL	0	0	0	0	0	0	0	0	0	0	0
Mass Flow Solids lb/hr											
STEEL	0	0	81.6	0	0	0	81.6	0	0	0	0
FIBERGLASS	0	0	201.35	0	0	0	201.35	0	0	0	0
CELLULOSE ACETATE	0	0	0	0	0	0	0	0	0	0	0
Total Average Flow lb/hr	500	46845.404	5025.886	500	48260.157	3827.934	3611.134	1117.165	467.238	1117.165	467.238
Notes			2				2				

Stream Number:	26	27	41	42	43	44	46	48	49	51	52	53
Stream Description	Nitrogen Purge to HDC	HDC Flue Gas	Energetic Hydrolysate to ENR	Insoluble Solids to HDC	HDC Residues at Discharge	Hydrolysate Dilution Water for WH	Steam Supply to Caustic Feed	Condensate Return from Caustic Feed	RM Hydrolysate to ENR	RM Load Chute Rinse Water	WH Load Chute Rinse Water	HDC Residues at Entrance
Temperature F	77	1100	222.3	219.4		118.6	300	299	215.5	131	118.6	
Pressure psi	14.23	14.23	14.23	14.23	14.23	14.23	66.23	66.23	14.23	14.23	14.23	14.23
Instantaneous Flow gpm (ACFM)	(144.928)	(451.583)	30.000			27.700	(223.768)	4.379	10.176	0.506	0.505	
Density lb/cuft	0.069	0.027	73.307			61.736	0.15	57.329	70.247	61.535	61.736	
Viscosity cP	0.018	0.036					0.014					
Molecular Weight	28.013	32.355					18.015					
Enthalpy MMBtu/hr	0	0.156	-26.333			-1.672	-2.86	-3.324	-8.305	-0.169	-0.17	
Mass Flow Liquids, Gases lb/hr												
N2	600	600	0	0	0	0	0	0	0	0	0	0
O2	0	0	0	0	0	0	0	0	0	0	0	0
N2O	0	0	0.038	0	0	0	0	0	0	0	0	0
H2	0	0	0	0	0	0	0	0	0	0	0	0
H2O	0	0	2888.383	0	0	246.485	503.477	503.477	1041.277	25	25	0
PROPYLENE GLYCOL	0	0	0	0	0	0	0	0	0	0	0	0
AMMONIA	0	0	0.108	0	0	0	0	0	0	0	0	0
NITRODIPHENYLAMINE	0	0	2.004	0	0	0	0	0	0.409	0	0	0
NITROSODIPHENYLAMINE	0	0	1.091	0	0	0	0	0	0.223	0	0	0
NITROPHENOL	0	0	6.068	0	0	0	0	0	1.24	0	0	0
NAOH	0	0	698.722	0	0	0	0	0	234.994	0	0	0
NITROCELLULOSE	0	0	0	0	0	0	0	0	0	0	0	0
NITROGLYCERIN	0	0	0	0	0	0	0	0	0	0	0	0
TRIACETIN	0	0	0	0	0	0	0	0	0	0	0	0
DIETHYLPHTHALATE	0	0	3.594	0	0	0	0	0	0.736	0	0	0
DIMETHYLPHTHALATE	0	0	7.289	0	0	0	0	0	1.497	0	0	0
ETHANOL	0	0	0.073	0	0	0	0	0	0.058	0	0	0
LEAD STEARATE	0	0	0	0	0	0	0	0	0	0	0	0
SODIUM STEARATE	0	0	7.332	0	0	0	0	0	1.496	0	0	0
LEAD OXIDE	0	0	2.669	0	0	0	0	0	0.545	0	0	0
PCB	0	0.41	0	0.41	0	0	0	0	0	0	0	0.41
TETRYL	0	0	0	0	0	0	0	0	0	0	0	0
RDX	0	0	0	0	0	0	0	0	0	0	0	0
TNT	0	0	0	0	0	0	0	0	0	0	0	0
ALUMINUM	0	0	0	0	0	0	0	0	0	0	0	0
NANO2	0	0	232.258	0	0	0	0	0	41.233	0	0	0
NANO3	0	0	113.295	0	0	0	0	0	23.123	0	0	0
NACHO2	0	0	246.866	0	0	0	0	0	32.697	0	0	0
NAC2H3O2	0	0	255.783	0	0	0	0	0	49.981	0	0	0
GLYCEROL	0	0	19.297	0	0	0	0	0	3.942	0	0	0
NAALO2	0	0	776.515	0	0	0	0	0	0	0	0	0
ACETONE	0	10.946	0	0	0	0	0	0	0	0	0	0
BENZENE	0	5.473	0	0	0	0	0	0	0	0	0	0
1,2 DICHLOROETHANE	0	8.651	0	0	0	0	0	0	0	0	0	0
ETHYLBENZENE	0	8.651	0	0	0	0	0	0	0	0	0	0
METHYLENE CHLORIDE	0	0.007	0	0	0	0	0	0	0	0	0	0
STYRENE	0	1.765	0	0	0	0	0	0	0	0	0	0
TOLUENE	0	7.415	0	0	0	0	0	0	0	0	0	0
2-BUTANONE	0	1.325	0	0	0	0	0	0	0	0	0	0
XYLENE	0	0.117	0	0	0	0	0	0	0	0	0	0
CHLOROETHANE	0	5.649	0	0	0	0	0	0	0	0	0	0
2-HEXANONE	0	0.037	0	0	0	0	0	0	0	0	0	0
CHLOROFORM	0	0.012	0	0	0	0	0	0	0	0	0	0
1,2 DICHLOROPROPANE	0	0.056	0	0	0	0	0	0	0	0	0	0
VINYL CHLORIDE	0	1.254	0	0	0	0	0	0	0	0	0	0
PHENOL	0	24.715	0	0	0	0	0	0	0	0	0	0
BENZOIC ACID	0	9.886	0	0	0	0	0	0	0	0	0	0
FLUORENE	0	0.336	0	0	0	0	0	0	0	0	0	0
HEXACHLOROCYCLOPENTADIENE	0	38.839	0	0	0	0	0	0	0	0	0	0
2-METHYLNAPHTHALENE	0	1.254	0	0	0	0	0	0	0	0	0	0
2-METHYLPHENOL	0	1.942	0	0	0	0	0	0	0	0	0	0
4-METHYLPHENOL	0	0.565	0	0	0	0	0	0	0	0	0	0
NAPHTHALENE	0	1.942	0	0	0	0	0	0	0	0	0	0
2,4 DIMETHYLPHENOL	0	0.317	0	0	0	0	0	0	0	0	0	0
Mass Flow Solids lb/hr												
STEEL	0	0	0	383.69	383.69	0	0	0	0	0	0	383.69
FIBERGLASS	0	0	0	328.39	211.483	0	0	0	0	0	0	328.39
CELLULOSE ACETATE	0	0	0	22.15	7.908	0	0	0	0	0	0	22.15
Total Average Flow lb/hr	600	731.564	5261.385	734.64	603.081	246.485	503.477	503.477	1433.451	25	25	734.64
Notes				2								2

Stream Number:	54	55	62	63	64	65	66	70	71	72	73
Stream Description	C. Water to Secondary Cooling HX, Cooling Conveyor	C. Water from Secondary Cooling HX, Cooling Conveyor	Caustic Feed Dilution Water for RM	Fresh Caustic Feed, 50% NaOH	Make-up Process Water RM EBH	Make-up Process Water WH EBH	Plant steam deamands WH Processing	Chilled Water to Secondary HX Condenser RM	Chilled Water to Secondary HX Condenser WH	Chilled Water RM Secondary HX Condenser RM	Chilled Water FM Secondary HX Condenser WH
Temperature F	45	60	131	77	77	77	300	45	45	60	60
Pressure psi	50	50	14.23	14.23	14.23	14.23	66.23	100	100	100	100
Instantaneous Flow gpm (ACFM)	11.580	11.619	27.700	26.600	4.000	6.442	(51.915)	86.500	86.500	86.500	86.500
Density lb/cuft	63.993	63.776	61.535	93.844	62.251	62.251	0.15	64	64	63.782	63.782
Viscosity cP							0.014				
Molecular Weight							18.015				
Enthalpy MMBtu/hr	-31.027	-30.953	-8.918	-17.936	-8.36	-5.489	-2.654	-51.924	-21.717	-51.801	-21.665
Mass Flow Liquids, Gases lb/hr											
N2	0	0	0	0	0	0	0	0	0	0	0
O2	0	0	0	0	0	0	0	0	0	0	0
N2O	0	0	0	0	0	0	0	0	0	0	0
H2	0	0	0	0	0	0	0	0	0	0	0
H2O	3566.499	3566.499	1316.941	1536.431	1224.776	804.247	467.238	5968.688	2496.314	5968.688	2496.314
PROPYLENE GLYCOL	2377.666	2377.666	0	0	0	0	0	3979.125	1664.209	3979.125	1664.209
AMMONIA	0	0	0	0	0	0	0	0	0	0	0
NITRODIPHENYLAMINE	0	0	0	0	0	0	0	0	0	0	0
NITROSODIPHENYLAMINE	0	0	0	0	0	0	0	0	0	0	0
NITROPHENOL	0	0	0	0	0	0	0	0	0	0	0
NAOH	0	0	0	1536.431	0	0	0	0	0	0	0
NITROCELLULOSE	0	0	0	0	0	0	0	0	0	0	0
NITROGLYCERIN	0	0	0	0	0	0	0	0	0	0	0
TRIACETIN	0	0	0	0	0	0	0	0	0	0	0
DIETHYLPHTHALATE	0	0	0	0	0	0	0	0	0	0	0
DIMETHYLPHTHALATE	0	0	0	0	0	0	0	0	0	0	0
ETHANOL	0	0	0	0	0	0	0	0	0	0	0
LEAD STEARATE	0	0	0	0	0	0	0	0	0	0	0
SODIUM STEARATE	0	0	0	0	0	0	0	0	0	0	0
LEAD OXIDE	0	0	0	0	0	0	0	0	0	0	0
PCB	0	0	0	0	0	0	0	0	0	0	0
TETRYL	0	0	0	0	0	0	0	0	0	0	0
RDX	0	0	0	0	0	0	0	0	0	0	0
TNT	0	0	0	0	0	0	0	0	0	0	0
ALUMINUM	0	0	0	0	0	0	0	0	0	0	0
NANO2	0	0	0	0	0	0	0	0	0	0	0
NANO3	0	0	0	0	0	0	0	0	0	0	0
NACHO2	0	0	0	0	0	0	0	0	0	0	0
NAC2H3O2	0	0	0	0	0	0	0	0	0	0	0
GLYCEROL	0	0	0	0	0	0	0	0	0	0	0
NAALO2	0	0	0	0	0	0	0	0	0	0	0
ACETONE	0	0	0	0	0	0	0	0	0	0	0
BENZENE	0	0	0	0	0	0	0	0	0	0	0
1,2 DICHLOROETHANE	0	0	0	0	0	0	0	0	0	0	0
ETHYLBENZENE	0	0	0	0	0	0	0	0	0	0	0
METHYLENE CHLORIDE	0	0	0	0	0	0	0	0	0	0	0
STYRENE	0	0	0	0	0	0	0	0	0	0	0
TOLUENE	0	0	0	0	0	0	0	0	0	0	0
2-BUTANONE	0	0	0	0	0	0	0	0	0	0	0
XYLENE	0	0	0	0	0	0	0	0	0	0	0
CHLOROETHANE	0	0	0	0	0	0	0	0	0	0	0
2-HEXANONE	0	0	0	0	0	0	0	0	0	0	0
CHLOROFORM	0	0	0	0	0	0	0	0	0	0	0
1,2 DICHLOROPROPANE	0	0	0	0	0	0	0	0	0	0	0
VINYL CHLORIDE	0	0	0	0	0	0	0	0	0	0	0
PHENOL	0	0	0	0	0	0	0	0	0	0	0
BENZOIC ACID	0	0	0	0	0	0	0	0	0	0	0
FLUORENE	0	0	0	0	0	0	0	0	0	0	0
HEXACHLOROCYCLOPENTADIENE	0	0	0	0	0	0	0	0	0	0	0
2-METHYLNAPHTHALENE	0	0	0	0	0	0	0	0	0	0	0
2-METHYLPHENOL	0	0	0	0	0	0	0	0	0	0	0
4-METHYLPHENOL	0	0	0	0	0	0	0	0	0	0	0
NAPHTHALENE	0	0	0	0	0	0	0	0	0	0	0
2,4 DIMETHYLPHENOL	0	0	0	0	0	0	0	0	0	0	0
Mass Flow Solids lb/hr											
STEEL	0	0	0	0	0	0	0	0	0	0	0
FIBERGLASS	0	0	0	0	0	0	0	0	0	0	0
CELLULOSE ACETATE	0	0	0	0	0	0	0	0	0	0	0
Total Average Flow lb/hr	5944.165	5944.165	1316.941	3072.862	1224.776	804.247	467.238	9947.813	4160.523	9947.813	4160.523
Notes											

Stream Number:	74	75	76	77	78	79	80	81	82	83
Stream Description	Excess Condensate	Total Process Water to RM EBH	Total Process Water to WH EBH	Secondary loop to Condesate Cooler RM	Secondary loop from Condesate Cooler RM	Secondary loop to Condesate Cooler WH	Secondary loop from Condesate Cooler WH	Secondary loop to Cooling Conveyor	Secondary loop From Cooling Conveyor	Deluge Water
Temperature F		131	118.6	45	60	45	60	45	60	
Pressure psi		14.23	14.23	100	100	100	100	50	50	
Instantaneous Flow gpm (ACFM)		38.206	2.568	32.400	32.400	32.400	32.400	11.580	11.619	73.9
Density lb/cuft		61.535	61.736	64	63.782	64	63.782	63.993	63.776	
Viscosity cP										
Molecular Weight										
Enthalpy MMBtu/hr		-15.858	-8.625	-51.924	-51.801	-21.717	-21.665	-31.027	-30.953	
Mass Flow Liquids, Gases lb/hr										
N2		0	0	0	0	0	0	0	0	
O2		0	0	0	0	0	0	0	0	
N2O		0	0	0	0	0	0	0	0	
H2		0	0	0	0	0	0	0	0	
H2O		2341.941	1271.485	5968.688	5968.688	2496.314	2496.314	3566.499	3566.499	
PROPYLENE GLYCOL		0	0	3979.125	3979.125	1664.209	1664.209	2377.666	2377.666	
AMMONIA		0	0	0	0	0	0	0	0	
NITRODIPHENYLAMINE		0	0	0	0	0	0	0	0	
NITROSODIPHENYLAMINE		0	0	0	0	0	0	0	0	
NITROPHENOL		0	0	0	0	0	0	0	0	
NAOH		0	0	0	0	0	0	0	0	
NITROCELLULOSE		0	0	0	0	0	0	0	0	
NITROGLYCERIN		0	0	0	0	0	0	0	0	
TRIACETIN		0	0	0	0	0	0	0	0	
DIETHYLPHTHALATE		0	0	0	0	0	0	0	0	
DIMETHYLPHTHALATE		0	0	0	0	0	0	0	0	
ETHANOL		0	0	0	0	0	0	0	0	
LEAD STEARATE		0	0	0	0	0	0	0	0	
SODIUM STEARATE		0	0	0	0	0	0	0	0	
LEAD OXIDE		0	0	0	0	0	0	0	0	
PCB		0	0	0	0	0	0	0	0	
TETRYL		0	0	0	0	0	0	0	0	
RDX		0	0	0	0	0	0	0	0	
TNT		0	0	0	0	0	0	0	0	
ALUMINUM		0	0	0	0	0	0	0	0	
NANO2		0	0	0	0	0	0	0	0	
NANO3		0	0	0	0	0	0	0	0	
NACHO2		0	0	0	0	0	0	0	0	
NAC2H3O2		0	0	0	0	0	0	0	0	
GLYCEROL		0	0	0	0	0	0	0	0	
NAALO2		0	0	0	0	0	0	0	0	
ACETONE		0	0	0	0	0	0	0	0	
BENZENE		0	0	0	0	0	0	0	0	
1,2 DICHLOROETHANE		0	0	0	0	0	0	0	0	
ETHYLBENZENE		0	0	0	0	0	0	0	0	
METHYLENE CHLORIDE		0	0	0	0	0	0	0	0	
STYRENE		0	0	0	0	0	0	0	0	
TOLUENE		0	0	0	0	0	0	0	0	
2-BUTANONE		0	0	0	0	0	0	0	0	
XYLENE		0	0	0	0	0	0	0	0	
CHLOROETHANE		0	0	0	0	0	0	0	0	
2-HEXANONE		0	0	0	0	0	0	0	0	
CHLOROFORM		0	0	0	0	0	0	0	0	
1,2 DICHLOROPROPANE		0	0	0	0	0	0	0	0	
VINYL CHLORIDE		0	0	0	0	0	0	0	0	
PHENOL		0	0	0	0	0	0	0	0	
BENZOIC ACID		0	0	0	0	0	0	0	0	
FLUORENE		0	0	0	0	0	0	0	0	
HEXACHLOROCYCLOPENTADIENE		0	0	0	0	0	0	0	0	
2-METHYLNAPHTHALENE		0	0	0	0	0	0	0	0	
2-METHYLPHENOL		0	0	0	0	0	0	0	0	
4-METHYLPHENOL		0	0	0	0	0	0	0	0	
NAPHTHALENE		0	0	0	0	0	0	0	0	
2,4 DIMETHYLPHENOL		0	0	0	0	0	0	0	0	
Mass Flow Solids lb/hr										
STEEL		0	0	0	0	0	0	0	0	
FIBERGLASS		0	0	0	0	0	0	0	0	
CELLULOSE ACETATE		0	0	0	0	0	0	0	0	
Total Average Flow lb/hr	0	2341.941	1271.485	9947.813	9947.813	4160.523	4160.523	5944.165	5944.165	0
Notes										

1 - All components in solid phase
2 - PCB in solid phase

Blayne Monen
Issued
2004/07/09

NO.	DATE	DESCRIPTION	DR	CK	DL	PE	APPD
0		ISSUED FOR DESIGN	NL	DG	AS	NW	DJ

QUALITY ☐ LEVEL 1 ☐ LEVEL 2 ☐ LEVEL 3 ☒ ALL

BECHTEL PARSONS BLUE GRASS
A Joint Venture of Bechtel National, INC. and Parsons Infrastructure & Technology Group Inc.

DOD PROGRAM MANAGER FOR ASSEMBLED CHEMICAL WEAPONS ASSESSMENT EDGEWOOD, MARYLAND

US ARMY ENGINEERING AND SUPPORT CENTER, HUNTSVILLE HUNTSVILLE, ALABAMA

GENERAL ATOMICS

BLUE GRASS CHEMICAL AGENT DESTRUCTION PILOT PLANT PROJECT (BGCAPP)
RICHMOND, KENTUCKY

CONTRACT NO. DAAA09-03-D-0023

ENERGETICS BATCH HYDROLIZER
PROCESS FLOW DIAGRAM

THIS DRAWING SUPERSEDES DWG NO 24915-07-M5-TCEH-0001

PROFESSIONAL STAMP

DRAWING NUMBER 24915-07-M5-EBH-00001 | SHEET 3 OF 9 | REV 0

bgcapp_d3.dwg

CASE 2 – EBH M55 GB ROCKETS – RESULTS FOR ONE RM/WH EBH PAIR AT PEAK PROCESSING RATE

Stream Number:	1	2	3	4	5	6	7	8	9	10	11	13	14	15	16	17
Stream Description	Sheared RM Feed	Heated Fresh Caustic Feed 50% NaOH	RM EBH Make-up Water (Wall Wash)	Air Supply RM EBH	Representative Contents Inside RM EBH	Rinse Water RM Solids Discharge	Vent Discharge from RM EBH	Hydrolysate leaving Tank	Discharge from RM EBH	Steam Suppy for RM	Sheared WH Feed	WH EBH Make-up Water (Wall Wash)	Air Supply WH EBH	Representative Contents Inside WH EBH	Rinse Water WH Solids Discharge	Vent Discharge from WH EBH
Temperature F	77	248	135.1	85	248	135.1	185	223.5	248	300	77	124.3	85	242.6	124.3	130
Pressure psi	14.23	14.23	14.23	14.23	14.23	14.23	14.23	14.23	14.23	14.23	14.23	14.23	14.23	14.23	14.23	14.23
Instantaneous Flow gpm (ACFM)																
Density lb/cuft		89.87	61.465	0.069	0.206	61.465	0.05	73.171	70.553	0.15		61.647	0.069	0.096	61.647	0.062
Viscosity cP				0.018	0.013		0.019			0.014			0.018	0.014		0.019
Molecular Weight				28.392	18.035		24.086			18.015			28.391	15.692		27.662
Enthalpy MMBtu/hr	-0.245	-14.559	-3.384	-0.294	-24.383	-2.82	-4.557	-22.032	-4.096	-8.31	-0.008	-3.389	-6.587	-19.148	-2.824	-12.983
Mass Flow lb/hr																
N2	0	0	0	1252	0	0	1252	0	0	0	0	0	29069.929	0	0	29069.929
O2	0	0	0	380.5	0.073	0	380.573	0	0	0	0	0	8830.891	4.071	0	8834.962
N2O	0	0	0	0	0	0	0	0.031	0	0	0	0	0	5.6	0	5.569
H2	0	0	0	0	0	0	0	0	0	0	0	0	0	23.871	0	23.871
H2O	0	1280.347	500	50.5	2962.363	416.667	802.553	2420.643	450.592	1463.192	0	500	1137.025	2339.671	416.667	2339.979
PROPYLENE GLYCOL	0	0	0	0	0	0	0	0	0	0	0	0	0	0	0	0
AMMONIA	0	0	0	0	0	0	0	0.087	0	0	0	0	0	12.434	0	12.347
NITRODIPHENYLAMINE	6.56	0	0	0	1.673	0	0.002	1.671	0.341	0	0	0	0	1.331	0	0.001
NITROSODIPHENYLAMINE	0	0	0	0	0.91	0	0	0.909	0.186	0	0	0	0	0.724	0	0.001
NITROPHENOL	0	0	0	0	5.068	0	0.004	5.057	1.032	0	0	0	0	4.032	0	0.008
NAOH	0	1280.347	0	0	959.539	0	0	582.295	195.611	0	0	0	0	386.684	0	0
NITROCELLULOSE	231.6	0	0	0	0	0	0	0	0	0	0	0	0	0	0	0
NITROGLYCERIN	91.87	0	0	0	0	0	0.107	0	0	0	0	0	0	0	0	0
TRIACETIN	38.21	0	0	0	0	0	0.08	0	0	0	0	0	0	0	0	0
DIETHYLPHTHALATE	10.04	0	0	0	3.01	0	0.012	2.996	0.613	0	0	0	0	2.392	0	0.009
DIMETHYLPHTHALATE	0	0	0	0	6.137	0	0.023	6.073	1.246	0	0	0	0	4.868	0	0.041
ETHANOL	0	0	0	0	1.456	0	1.241	0.055	0.044	0	0	0	0	0.171	0	0.16
LEAD STEARATE	7.72	0	0	0	0	0	0	0	0	0	0	0	0	0	0	0
SODIUM STEARATE	0	0	0	0	6.112	0	0	6.112	1.246	0	0	0	0	4.866	0	0
LEAD OXIDE	0	0	0	0	2.225	0	0	2.225	0.454	0	0	0	0	1.772	0	0
PCB	0.13	0	0	0	0.13	0	0	0	0.13	0	0.21	0	0	0.21	0	0
TETRYL	0	0	0	0	0	0	0	0	0	0	0	0	0	0	0	0
RDX	0	0	0	0	0	0	0	0	0	0	37.68	0	0	0	0	0
TNT	0	0	0	0	0	0	0	0	0	0	25.12	0	0	0	0	0
ALUMINUM	0	0	0	0	0	0	0	0	0	0	213	0	0	0	0	0
NANO2	0	0	0	0	168.345	0	0	193.532	34.319	0	0	0	0	159.214	0	0
NANO3	0	0	0	0	94.401	0	0	94.401	19.245	0	0	0	0	75.157	0	0
NACHO2	0	0	0	0	133.499	0	0	205.715	27.215	0	0	0	0	178.5	0	0
NAC2H3O2	0	0	0	0	204.038	0	0	213.111	41.595	0	0	0	0	171.516	0	0
GLYCEROL	0	0	0	0	16.093	0	0.01	16.067	3.279	0	0	0	0	12.805	0	0.017
NAALO2	0	0	0	0	0	0	0	647.096	0	0	0	0	0	647.096	0	0
ACETONE	0	0	0	0	0	0	0	0	0	0	0	0	0	0	0	0
BENZENE	0	0	0	0	0	0	0	0	0	0	0	0	0	0	0	0
1,2 DICHLOROETHANE	0	0	0	0	0	0	0	0	0	0	0	0	0	0	0	0
ETHYLBENZENE	0	0	0	0	0	0	0	0	0	0	0	0	0	0	0	0
METHYLENE CHLORIDE	0	0	0	0	0	0	0	0	0	0	0	0	0	0	0	0
STYRENE	0	0	0	0	0	0	0	0	0	0	0	0	0	0	0	0
TOLUENE	0	0	0	0	0	0	0	0	0	0	0	0	0	0	0	0
2-BUTANONE	0	0	0	0	0	0	0	0	0	0	0	0	0	0	0	0
XYLENE	0	0	0	0	0	0	0	0	0	0	0	0	0	0	0	0
CHLOROETHANE	0	0	0	0	0	0	0	0	0	0	0	0	0	0	0	0
2-HEXANONE	0	0	0	0	0	0	0	0	0	0	0	0	0	0	0	0
CHLOROFORM	0	0	0	0	0	0	0	0	0	0	0	0	0	0	0	0
1,2 DICHLOROPROPANE	0	0	0	0	0	0	0	0	0	0	0	0	0	0	0	0
VINYL CHLORIDE	0	0	0	0	0	0	0	0	0	0	0	0	0	0	0	0
PHENOL	0	0	0	0	0	0	0	0	0	0	0	0	0	0	0	0
BENZOIC ACID	0	0	0	0	0	0	0	0	0	0	0	0	0	0	0	0
FLUORENE	0	0	0	0	0	0	0	0	0	0	0	0	0	0	0	0
HEXACHLOROCYCLOPENTADIENE	0	0	0	0	0	0	0	0	0	0	0	0	0	0	0	0
2-METHYLNAPHTHALENE	0	0	0	0	0	0	0	0	0	0	0	0	0	0	0	0
2-METHYLPHENOL	0	0	0	0	0	0	0	0	0	0	0	0	0	0	0	0
4-METHYLPHENOL	0	0	0	0	0	0	0	0	0	0	0	0	0	0	0	0
NAPHTHALENE	0	0	0	0	0	0	0	0	0	0	0	0	0	0	0	0
2,4 DIMETHYLPHENOL	0	0	0	0	0	0	0	0	0	0	0	0	0	0	0	0
Mass Flow Solids lb/hr																
STEEL	251.74	0	0	0	251.74	0	0	0	251.74	0	68	0	0	68	0	0
FIBERGLASS	105.87	0	0	0	105.87	0	0	0	105.87	0	167.79	0	0	167.79	0	0
CELLULOSE ACETATE	18.46	0	0	0	18.46	0	0	0	18.46	0	0	0	0	0	0	0
Total Average Flow lb/hr	762.2	2560.694	500	1683	4941.142	416.667	2436.605	4398.076	1153.218	1463.192	511.8	500	39037.845	4272.775	416.667	40286.894
Notes	1				2				2		1			2		

Stream Number:	18	19	20	21	22	23	26	27	41	42	43	44	46	48	49	51	52	53
Stream Description	Energetic Hydrolysate Exiting WH EBH	Discharge from WH EBH	Steam Supply to RM EBH	Steam Supply to WH EBH	Condensate from RM EBH	Condensate from WH EBH	Nitrogen Purge to HDC	HDC Flue Gas	Energetic Hydrolysate to ENR	Insoluble Solids to HDC	HDC Residues at Discharge	Hydrolysate Dilution Water for WH	Steam Supply to Caustic Feed	Condensate Return from Caustic Feed	RM Hydrolysate to ENR	RM Load Chute Rinse Water	WH Load Chute Rinse Water	HDC Residues at Entrance
Temperature F	226.2	242.6	300	300	299	299	77	1100	223.5	220.8		124.3	300	299	217	135.1	124.3	
Pressure psi	14.23	14.23	66.23	66.23	66.23	66.23	14.23	14.23	14.23	14.23	14.23	14.23	66.23	66.23	14.23	14.23	14.23	14.23
Instantaneous Flow gpm (ACFM)																		
Density lb/cuft	73.035	72.011	0.15	0.15	57.329	57.329	0.069	0.027	73.171			61.647	0.15	57.329	70.207	61.465	61.647	
Viscosity cP			0.014	0.014			0.018	0.037					0.014					
Molecular Weight			18.015	18.015			28.013	31.664					18.015					
Enthalpy MMBtu/hr	-15.118	-12.294	-5.927	-2.711	-6.89	-3.151	0	0.157	-22.032			-1.393	-2.383	-2.77	-6.915	-0.142	-0.142	
Mass Flow lb/hr																		
N2	0	0	0	0	0	0	600	600	0	0	0	0	0	0	0	0	0	0
O2	0	0	0	0	0	0	0	0	0	0	0	0	0	0	0	0	0	0
N2O	0.031	0.031	0	0	0	0	0	0	0.031	0	0	0	0	0	0	0	0	0
H2	0	0	0	0	0	0	0	0	0	0	0	0	0	0	0	0	0	0
H2O	1553.385	1136.718	1043.632	477.336	1043.632	477.336	0	0	2420.643	0	0	205.456	419.56	419.56	867.259	21	21	0
PROPYLENE GLYCOL	0	0	0	0	0	0	0	0	0	0	0	0	0	0	0	0	0	0
AMMONIA	0.087	0.087	0	0	0	0	0	0	0.087	0	0	0	0	0	0	0	0	0
NITRODIPHENYLAMINE	1.33	1.33	0	0	0	0	0	0	1.671	0	0	0	0	0	0.341	0	0	0
NITROSODIPHENYLAMINE	0.724	0.724	0	0	0	0	0	0	0.909	0	0	0	0	0	0.186	0	0	0
NITROPHENOL	4.024	4.024	0	0	0	0	0	0	5.057	0	0	0	0	0	1.032	0	0	0
NAOH	386.684	386.684	0	0	0	0	0	0	582.295	0	0	0	0	0	195.611	0	0	0
NITROCELLULOSE	0	0	0	0	0	0	0	0	0	0	0	0	0	0	0	0	0	0
NITROGLYCERIN	0	0	0	0	0	0	0	0	0	0	0	0	0	0	0	0	0	0
TRIACETIN	0	0	0	0	0	0	0	0	0	0	0	0	0	0	0	0	0	0
DIETHYLPHTHALATE	2.383	2.383	0	0	0	0	0	0	2.996	0	0	0	0	0	0.613	0	0	0
DIMETHYLPHTHALATE	4.827	4.827	0	0	0	0	0	0	6.073	0	0	0	0	0	1.246	0	0	0
ETHANOL	0.011	0.011	0	0	0	0	0	0	0.055	0	0	0	0	0	0.044	0	0	0
LEAD STEARATE	0	0	0	0	0	0	0	0	0	0	0	0	0	0	0	0	0	0
SODIUM STEARATE	4.866	4.866	0	0	0	0	0	0	6.112	0	0	0	0	0	1.246	0	0	0
LEAD OXIDE	1.772	1.772	0	0	0	0	0	0	2.225	0	0	0	0	0	0.454	0	0	0
PCB	0	0.21	0	0	0	0	0	0.34	0	0.34	0	0	0	0	0	0	0	0.34
TETRYL	0	0	0	0	0	0	0	0	0	0	0	0	0	0	0	0	0	0
RDX	0	0	0	0	0	0	0	0	0	0	0	0	0	0	0	0	0	0
TNT	0	0	0	0	0	0	0	0	0	0	0	0	0	0	0	0	0	0
ALUMINUM	0	0	0	0	0	0	0	0	0	0	0	0	0	0	0	0	0	0
NANO2	159.214	159.214	0	0	0	0	0	0	193.532	0	0	0	0	0	34.319	0	0	0
NANO3	75.157	75.157	0	0	0	0	0	0	94.401	0	0	0	0	0	19.245	0	0	0
NACHO2	178.5	178.5	0	0	0	0	0	0	205.715	0	0	0	0	0	27.215	0	0	0
NAC2H3O2	171.516	171.516	0	0	0	0	0	0	213.111	0	0	0	0	0	41.595	0	0	0
GLYCEROL	12.788	12.788	0	0	0	0	0	0	16.067	0	0	0	0	0	3.279	0	0	0
NAALO2	647.096	647.096	0	0	0	0	0	0	647.096	0	0	0	0	0	0	0	0	0
ACETONE	0	0	0	0	0	0	0	9.122	0	0	0	0	0	0	0	0	0	0
BENZENE	0	0	0	0	0	0	0	4.561	0	0	0	0	0	0	0	0	0	0
1,2 DICHLOROETHANE	0	0	0	0	0	0	0	7.209	0	0	0	0	0	0	0	0	0	0
ETHYLBENZENE	0	0	0	0	0	0	0	7.209	0	0	0	0	0	0	0	0	0	0
METHYLENE CHLORIDE	0	0	0	0	0	0	0	0.005	0	0	0	0	0	0	0	0	0	0
STYRENE	0	0	0	0	0	0	0	1.471	0	0	0	0	0	0	0	0	0	0
TOLUENE	0	0	0	0	0	0	0	6.179	0	0	0	0	0	0	0	0	0	0
2-BUTANONE	0	0	0	0	0	0	0	1.104	0	0	0	0	0	0	0	0	0	0
XYLENE	0	0	0	0	0	0	0	0.097	0	0	0	0	0	0	0	0	0	0
CHLOROETHANE	0	0	0	0	0	0	0	4.707	0	0	0	0	0	0	0	0	0	0
2-HEXANONE	0	0	0	0	0	0	0	0.031	0	0	0	0	0	0	0	0	0	0
CHLOROFORM	0	0	0	0	0	0	0	0.01	0	0	0	0	0	0	0	0	0	0
1,2 DICHLOROPROPANE	0	0	0	0	0	0	0	0.047	0	0	0	0	0	0	0	0	0	0
VINYL CHLORIDE	0	0	0	0	0	0	0	1.045	0	0	0	0	0	0	0	0	0	0
PHENOL	0	0	0	0	0	0	0	20.596	0	0	0	0	0	0	0	0	0	0
BENZOIC ACID	0	0	0	0	0	0	0	8.238	0	0	0	0	0	0	0	0	0	0
FLUORENE	0	0	0	0	0	0	0	0.28	0	0	0	0	0	0	0	0	0	0
HEXACHLOROCYCLOPENTADIENE	0	0	0	0	0	0	0	32.366	0	0	0	0	0	0	0	0	0	0
2-METHYLNAPHTHALENE	0	0	0	0	0	0	0	1.045	0	0	0	0	0	0	0	0	0	0
2-METHYLPHENOL	0	0	0	0	0	0	0	1.619	0	0	0	0	0	0	0	0	0	0
4-METHYLPHENOL	0	0	0	0	0	0	0	0.471	0	0	0	0	0	0	0	0	0	0
NAPHTHALENE	0	0	0	0	0	0	0	1.619	0	0	0	0	0	0	0	0	0	0
2,4 DIMETHYLPHENOL	0	0	0	0	0	0	0	0.264	0	0	0	0	0	0	0	0	0	0
Mass Flow Solids lb/hr																		
STEEL	0	68	0	0	0	0	0	0	0	319.74	319.74	0	0	0	0	0	0	319.74
FIBERGLASS	0	167.79	0	0	0	0	0	0	0	273.66	176.237	0	0	0	0	0	0	273.66
CELLULOSE ACETATE	0	0	0	0	0	0	0	0	0	18.46	6.59	0	0	0	0	0	0	18.46
Total Average Flow lb/hr	3204.395	3023.728	1043.632	477.336	1043.632	477.336	600	709.635	4398.076	612.2	502.567	205.456	419.56	419.56	1193.685	21	21	612.2
Notes		2								2								2

Stream Number:	54	55	62	63	64	65	66	70	71	72	73	74	75	76	77	78	79	80	81	82	83
Stream Description	C. Water to Secondary Cooling HX, Cooling Conveyor	C. Water from Secondary Cooling HX, Cooling Conveyor	Caustic Feed Dilution Water for RM	Fresh Caustic Feed, 50% NaOH	Make-up Process Water RM EBH	Make-up Process Water WH EBH	Plant steam deamands WH Processing	Chilled Water to Secondary HX Condenser RM	Chilled Water to Secondary HX Condenser WH	Chilled Water RM Secondary HX Condenser RM	Chilled Water FM Secondary HX Condenser WH	Excess Condensate	Total Process Water to RM EBH	Total Process Water to WH EBH	Secondary loop to Condesate Cooler RM	Secondary loop from Condesate Cooler RM	Secondary loop to Condesate Cooler WH	Secondary loop from Condesate Cooler WH	Secondary loop to Cooling Conveyor	Secondary loop From Cooling Conveyor	Deluge Water
Temperature F	45	60	135.1	77	77	77	300	45	45	60	60		135.1	124.3	45	60	45	60	45	60	
Pressure psi	50	50	14.23	14.23	14.23	14.23	66.23	100	100	100	100		14.23	14.23	100	100	100	100	50	50	
Instantaneous Flow gpm (ACFM)																					
Density lb/cuft	63.993	63.776	61.465	93.844	62.251	62.251	0.15	64	64	63.782	63.782		61.465	61.647	64	63.782	64	63.782	63.993	63.776	
Viscosity cP							0.014														
Molecular Weight							18.015														
Enthalpy MMBtu/hr	-25.856	-25.794	-7.427	-14.946	-6.767	-4.544	-2.711	-48.506	-22.186	-48.391	-22.133		-13.772	-7.748	-48.506	-48.391	-22.186	-22.133	-25.856	-25.794	
Mass Flow lb/hr																					
N2	0	0	0	0	0	0	0	0	0	0	0		0	0	0	0	0	0	0	0	
O2	0	0	0	0	0	0	0	0	0	0	0		0	0	0	0	0	0	0	0	
N2O	0	0	0	0	0	0	0	0	0	0	0		0	0	0	0	0	0	0	0	
H2	0	0	0	0	0	0	0	0	0	0	0		0	0	0	0	0	0	0	0	
H2O	2972.091	2972.091	1097.44	1280.347	991.475	665.786	477.336	5575.819	2550.269	5575.819	2550.269		2035.107	1143.123	5575.819	5575.819	2550.269	2550.269	2972.091	2972.091	
PROPYLENE GLYCOL	1981.394	1981.394	0	0	0	0	0	3717.213	1700.179	3717.213	1700.179		0	0	3717.213	3717.213	1700.179	1700.179	1981.394	1981.394	
AMMONIA	0	0	0	0	0	0	0	0	0	0	0		0	0	0	0	0	0	0	0	
NITRODIPHENYLAMINE	0	0	0	0	0	0	0	0	0	0	0		0	0	0	0	0	0	0	0	
NITROSODIPHENYLAMINE	0	0	0	0	0	0	0	0	0	0	0		0	0	0	0	0	0	0	0	
NITROPHENOL	0	0	0	0	0	0	0	0	0	0	0		0	0	0	0	0	0	0	0	
NAOH	0	0	0	1280.347	0	0	0	0	0	0	0		0	0	0	0	0	0	0	0	
NITROCELLULOSE	0	0	0	0	0	0	0	0	0	0	0		0	0	0	0	0	0	0	0	
NITROGLYCERIN	0	0	0	0	0	0	0	0	0	0	0		0	0	0	0	0	0	0	0	
TRIACETIN	0	0	0	0	0	0	0	0	0	0	0		0	0	0	0	0	0	0	0	
DIETHYLPHTHALATE	0	0	0	0	0	0	0	0	0	0	0		0	0	0	0	0	0	0	0	
DIMETHYLPHTHALATE	0	0	0	0	0	0	0	0	0	0	0		0	0	0	0	0	0	0	0	
ETHANOL	0	0	0	0	0	0	0	0	0	0	0		0	0	0	0	0	0	0	0	
LEAD STEARATE	0	0	0	0	0	0	0	0	0	0	0		0	0	0	0	0	0	0	0	
SODIUM STEARATE	0	0	0	0	0	0	0	0	0	0	0		0	0	0	0	0	0	0	0	
LEAD OXIDE	0	0	0	0	0	0	0	0	0	0	0		0	0	0	0	0	0	0	0	
PCB	0	0	0	0	0	0	0	0	0	0	0		0	0	0	0	0	0	0	0	
TETRYL	0	0	0	0	0	0	0	0	0	0	0		0	0	0	0	0	0	0	0	
RDX	0	0	0	0	0	0	0	0	0	0	0		0	0	0	0	0	0	0	0	
TNT	0	0	0	0	0	0	0	0	0	0	0		0	0	0	0	0	0	0	0	
ALUMINUM	0	0	0	0	0	0	0	0	0	0	0		0	0	0	0	0	0	0	0	
NANO2	0	0	0	0	0	0	0	0	0	0	0		0	0	0	0	0	0	0	0	
NANO3	0	0	0	0	0	0	0	0	0	0	0		0	0	0	0	0	0	0	0	
NACHO2	0	0	0	0	0	0	0	0	0	0	0		0	0	0	0	0	0	0	0	
NAC2H3O2	0	0	0	0	0	0	0	0	0	0	0		0	0	0	0	0	0	0	0	
GLYCEROL	0	0	0	0	0	0	0	0	0	0	0		0	0	0	0	0	0	0	0	
NAALO2	0	0	0	0	0	0	0	0	0	0	0		0	0	0	0	0	0	0	0	
ACETONE	0	0	0	0	0	0	0	0	0	0	0		0	0	0	0	0	0	0	0	
BENZENE	0	0	0	0	0	0	0	0	0	0	0		0	0	0	0	0	0	0	0	
1,2 DICHLOROETHANE	0	0	0	0	0	0	0	0	0	0	0		0	0	0	0	0	0	0	0	
ETHYLBENZENE	0	0	0	0	0	0	0	0	0	0	0		0	0	0	0	0	0	0	0	
METHYLENE CHLORIDE	0	0	0	0	0	0	0	0	0	0	0		0	0	0	0	0	0	0	0	
STYRENE	0	0	0	0	0	0	0	0	0	0	0		0	0	0	0	0	0	0	0	
TOLUENE	0	0	0	0	0	0	0	0	0	0	0		0	0	0	0	0	0	0	0	
2-BUTANONE	0	0	0	0	0	0	0	0	0	0	0		0	0	0	0	0	0	0	0	
XYLENE	0	0	0	0	0	0	0	0	0	0	0		0	0	0	0	0	0	0	0	
CHLOROETHANE	0	0	0	0	0	0	0	0	0	0	0		0	0	0	0	0	0	0	0	
2-HEXANONE	0	0	0	0	0	0	0	0	0	0	0		0	0	0	0	0	0	0	0	
CHLOROFORM	0	0	0	0	0	0	0	0	0	0	0		0	0	0	0	0	0	0	0	
1,2 DICHLOROPROPANE	0	0	0	0	0	0	0	0	0	0	0		0	0	0	0	0	0	0	0	
VINYL CHLORIDE	0	0	0	0	0	0	0	0	0	0	0		0	0	0	0	0	0	0	0	
PHENOL	0	0	0	0	0	0	0	0	0	0	0		0	0	0	0	0	0	0	0	
BENZOIC ACID	0	0	0	0	0	0	0	0	0	0	0		0	0	0	0	0	0	0	0	
FLUORENE	0	0	0	0	0	0	0	0	0	0	0		0	0	0	0	0	0	0	0	
HEXACHLOROCYCLOPENTADIENE	0	0	0	0	0	0	0	0	0	0	0		0	0	0	0	0	0	0	0	
2-METHYLNAPHTHALENE	0	0	0	0	0	0	0	0	0	0	0		0	0	0	0	0	0	0	0	
2-METHYLPHENOL	0	0	0	0	0	0	0	0	0	0	0		0	0	0	0	0	0	0	0	
4-METHYLPHENOL	0	0	0	0	0	0	0	0	0	0	0		0	0	0	0	0	0	0	0	
NAPHTHALENE	0	0	0	0	0	0	0	0	0	0	0		0	0	0	0	0	0	0	0	
2,4 DIMETHYLPHENOL	0	0	0	0	0	0	0	0	0	0	0		0	0	0	0	0	0	0	0	
Mass Flow Solids lb/hr																					
STEEL	0	0	0	0	0	0	0	0	0	0	0		0	0	0	0	0	0	0	0	
FIBERGLASS	0	0	0	0	0	0	0	0	0	0	0		0	0	0	0	0	0	0	0	
CELLULOSE ACETATE	0	0	0	0	0	0	0	0	0	0	0		0	0	0	0	0	0	0	0	
Total Average Flow lb/hr	4953.485	4953.485	1097.44	2560.694	991.475	665.786	477.336	9293.032	4250.448	9293.032	4250.448	0	2035.107	1143.123	9293.032	9293.032	4250.448	4250.448	4953.485	4953.485	0
Notes																					

1 - All components in solid phase
2 - PCB in solid phase

Blayne Monen
Issued
2004/07/09

NO.	DATE	DESCRIPTION	DR	CK	DL	PE	APPD
0		ISSUED FOR DESIGN	NL	DG	AS	NW	DJ

QUALITY ☐ LEVEL 1 ☐ LEVEL 2 ☐ LEVEL 3 ☒ ALL

BECHTEL PARSONS BLUE GRASS
A Joint Venture of Bechtel National, INC. and Parsons Infrastructure & Technology Group Inc.

DOD PROGRAM MANAGER FOR ASSEMBLED CHEMICAL WEAPONS ASSESSMENT EDGEWOOD, MARYLAND

US ARMY ENGINEERING AND SUPPORT CENTER, HUNTSVILLE HUNTSVILLE, ALABAMA

GENERAL ATOMICS

BLUE GRASS CHEMICAL AGENT DESTRUCTION PILOT PLANT PROJECT (BGCAPP)
RICHMOND, KENTUCKY

CONTRACT NO. DAAA09-03-D-0023

ENERGETICS BATCH HYDROLIZER PROCESS FLOW DIAGRAM

THIS DRAWING SUPERSEDES DWG NO 24915-07-M5-TCEH-0001

PROFESSIONAL STAMP

DRAWING NUMBER 24915-07-M5-EBH-00001

SHEET 4 OF 9

REV 0

bgcapp_d3.dwg

CASE 3 – EBH M110 H PROJECTILES – RESULTS FOR ONE RM EBH AT PEAK PROCESSING RATE

Stream Number:	1	2	3	4	5	6	7	8	9	10	11	13	14	15	16	17	18	19	20	21	22	23	26	27	41	42	43	44	46	48	49	51	52	53	54	55	62	63	64	65	66	70	71	72	73	74	75	76	77	78	79	80	81	82	83
Stream Description	Sheared RM Feed	Heated Fresh Caustic Feed 50% NaOH	RM EBH Make-up Water (Wall Wash)	Air Supply RM EBH	Representative Contents Inside RM EBH	Rinse Water RM Solids Discharge	Vent Discharge from RM EBH	Hydrolysate leaving Tank	Discharge from RM EBH	Steam Suppy for RM	Sheared WH Feed	WH EBH Make-up Water (Wall Wash)	Air Supply WH EBH	Representative Contents Inside WH EBH	Rinse Water WH Solids Discharge	Vent Discharge from WH EBH	Energetic Hydrolysate Exiting WH EBH	Discharge from WH EBH	Steam Supply to RM EBH	Steam Supply to WH EBH	Condensate from RM EBH	Condensate from WH EBH	Nitrogen Purge to HDC	HDC Flue Gas	Energetic Hydrolysate to ENR	Insoluble Solids to HDC	HDC Residues at Discharge	Hydrolysate Dilution Water for WH	Steam Supply to Caustic Feed	Condensate Return from Caustic Feed	RM Hydrolysate to ENR	RM Load Chute Rinse Water	WH Load Chute Rinse Water	HDC Residues at Entrance	C. Water to Secondary Cooling HX, Cooling Conveyor	C. Water from Secondary Cooling HX Cooling Conveyor	Caustic Feed Dilution Water for RM	Fresh Caustic Feed, 50% NaOH	Make-up Process Water RM EBH	Make-up Process Water WH EBH	Plant steam deamands WH Processing	Chilled Water to Secondary HX Condenser RM	Chilled Water to Secondary HX Condenser WH	Chilled Water RM Secondary HX Condenser RM	Chilled Water FM Secondary HX Condenser WH	Excess Condensate	Total Process Water to RM EBH	Total Process Water to WH EBH	Secondary loop to Condesate Cooler RM	Secondary loop from Condesate Cooler RM	Secondary loop to Condesate Cooler WH	Secondary loop from Condesate Cooler WH	Secondary loop to Cooling Conveyor	Secondary loop From Cooling Conveyor	Deluge Water
Temperature F	77	248	188	85	248	188	185	243	248	300									300		299		77	1100	243				300	299	243	188			45	60	188	77	77			45		60			188		45	60			45	60	
Pressure psi	14.23	14.23	14.23	14.23	14.23	14.23	14.23	14.23	14.23	66.23									66.23		66.23		14.23	14.23	14.23	14.23	14.23		66.23	66.23	14.23	14.23		14.23	50	50	14.23	14.23	14.23			100		100			14.23		100	100			50	50	
Instantaneous Flow gpm (ACFM)																																																							
Density lb/cuft		89.87	60.39	0.069	0.063	60.39	0.051	73.279	73.82	0.15									0.15		57.329		0.069	0.024					0.15	57.329	73.279	60.39			63.993	63.776	60.39	93.844	62.251			64		63.782			60.39		64	63.782			63.993	63.776	
Viscosity cP				0.018	0.013		0.019			0.014									0.014				0.018	0.038					0.014																											
Molecular Weight				28.392	17.964		24.917			18.015									18.015				28.013	28.013					18.015																											
Enthalpy MMBtu/hr	0	-1.747	-3.357	-0.294	-5.601	-0.168	-3.246	-2.787	-2.617	-4.097									-3.811		-4.429		0	0.158	-2.787				-0.286	-0.332	-2.787	-0.181			-2.349	-2.343	-0.884	-1.794	-0.087			-31.183		-31.109			-4.591		-31.183	-31.109			-2.349	-2.343	
Mass Flow lb/hr																																																							
N2	0	0	0	1252	0	0	1252	0	0	0									0		0		600	600	0	0	0		0	0	0	0		0	0	0	0	0	0			0		0			0		0	0			0	0	
O2	0	0	0	380.5	0	0	380.5	0	0	0									0		0		0	0	0	0	0		0	0	0	0		0	0	0	0	0	0			0		0			0		0	0			0	0	
N2O	0	0	0	0	0	0	0	0	0	0									0		0		0	0	0	0	0		0	0	0	0		0	0	0	0	0	0			0		0			0		0	0			0	0	
H2	0	0	0	0	0.175	0	0.175	0	0	0									0		0		0	0	0	0	0		0	0	0	0		0	0	0	0	0	0			0		0			0		0	0			0	0	
H2O	0	153.651	500	50.5	810.581	25	573.795	312.286	287.286	721.266									670.916		670.916		0	0	312.286	0	0		50.35	50.35	312.286	27		0	270.013	270.013	131.694	153.651	12.778			3584.506		3584.506			683.694		3584.506	3584.506			270.013	270.013	
PROPYLENE GLYCOL	0	0	0	0	0	0	0	0	0	0									0		0		0	0	0	0	0		0	0	0	0		0	180.009	180.009	0	0	0			2389.671		2389.671			0		2389.671	2389.671			180.009	180.009	
AMMONIA	0	0	0	1.807	0	0	1.802	0.005	0.005	0									0		0		0	0	0.005	0	0		0	0	0.005	0		0	0	0	0	0	0			0		0			0		0	0			0	0	
NAOH	0	153.651	0	0	138.042	0	0	138.042	138.042	0									0		0		0	0	138.042	0	0		0	0	138.042	0		0	0	0	0	153.651	0			0		0			0		0	0			0	0	
NITROCELLULOSE	0	0	0	0	0	0	0	0	0	0									0		0		0	0	0	0	0		0	0	0	0		0	0	0	0	0	0			0		0			0		0	0			0	0	
NITROGLYCERIN	0	0	0	0	0	0	0	0	0	0									0		0		0	0	0	0	0		0	0	0	0		0	0	0	0	0	0			0		0			0		0	0			0	0	
TRIACETIN	0	0	0	0	0	0	0	0	0	0									0		0		0	0	0	0	0		0	0	0	0		0	0	0	0	0	0			0		0			0		0	0			0	0	
TETRYL	7.46	0	0	0	0	0	0	0	0	0									0		0		0	0	0	0	0		0	0	0	0		0	0	0	0	0	0			0		0			0		0	0			0	0	
RDX	0	0	0	0	0	0	0	0	0	0									0		0		0	0	0	0	0		0	0	0	0		0	0	0	0	0	0			0		0			0		0	0			0	0	
TNT	3.2	0	0	0	0	0	0	0	0	0									0		0		0	0	0	0	0		0	0	0	0		0	0	0	0	0	0			0		0			0		0	0			0	0	
ALUMINUM	1.56	0	0	0	0	0	0	0	0	0									0		0		0	0	0	0	0		0	0	0	0		0	0	0	0	0	0			0		0			0		0	0			0	0	
NANO2	0	0	0	4.557	0	0	0	4.557	4.557	0									0		0		0	0	4.557	0	0		0	0	4.557	0		0	0	0	0	0	0			0		0			0		0	0			0	0	
NANO3	0	0	0	0	0	0	0	0	0	0									0		0		0	0	0	0	0		0	0	0	0		0	0	0	0	0	0			0		0			0		0	0			0	0	
SODIUM FORMATE	0	0	0	17.158	0	0	17.158	17.158	0										0		0		0	0	17.158	0	0		0	0	17.158	0		0	0	0	0	0	0			0		0			0		0	0			0	0	
SODIUM ACETATE	0	0	0	1.156	0	0	1.156	1.156	0										0		0		0	0	1.156	0	0		0	0	1.156	0		0	0	0	0	0	0			0		0			0		0	0			0	0	
GLYCEROL	0	0	0	0	0	0	0	0	0	0									0		0		0	0	0	0	0		0	0	0	0		0	0	0	0	0	0			0		0			0		0	0			0	0	
NAALO2	0	0	0	4.739	0	0	0	4.739	4.739	0									0		0		0	0	4.739	0	0		0	0	4.739	0		0	0	0	0	0	0			0		0			0		0	0			0	0	
ACETONE	0	0	0	0	0	0	0	0	0	0									0		0		0	0	0	0	0		0	0	0	0		0	0	0	0	0	0			0		0			0		0	0			0	0	
BENZENE	0	0	0	0	0	0	0	0	0	0									0		0		0	0	0	0	0		0	0	0	0		0	0	0	0	0	0			0		0			0		0	0			0	0	
1,2 DICHLOROETHANE	0	0	0	0	0	0	0	0	0	0									0		0		0	0	0	0	0		0	0	0	0		0	0	0	0	0	0			0		0			0		0	0			0	0	
ETHYLBENZENE	0	0	0	0	0	0	0	0	0	0									0		0		0	0	0	0	0		0	0	0	0		0	0	0	0	0	0			0		0			0		0	0			0	0	
METHYLENE CHLORIDE	0	0	0	0	0	0	0	0	0	0									0		0		0	0	0	0	0		0	0	0	0		0	0	0	0	0	0			0		0			0		0	0			0	0	
STYRENE	0	0	0	0	0	0	0	0	0	0									0		0		0	0	0	0	0		0	0	0	0		0	0	0	0	0	0			0		0			0		0	0			0	0	
TOLUENE	0	0	0	0	0	0	0	0	0	0									0		0		0	0	0	0	0		0	0	0	0		0	0	0	0	0	0			0		0			0		0	0			0	0	
2-BUTANONE	0	0	0	0	0	0	0	0	0	0									0		0		0	0	0	0	0		0	0	0	0		0	0	0	0	0	0			0		0			0		0	0			0	0	
XYLENE	0	0	0	0	0	0	0	0	0	0									0		0		0	0	0	0	0		0	0	0	0		0	0	0	0	0	0			0		0			0		0	0			0	0	
CHLOROETHANE	0	0	0	0	0	0	0	0	0	0									0		0		0	0	0	0	0		0	0	0	0		0	0	0	0	0	0			0		0			0		0	0			0	0	
2-HEXANONE	0	0	0	0	0	0	0	0	0	0									0		0		0	0	0	0	0		0	0	0	0		0	0	0	0	0	0			0		0			0		0	0			0	0	
CHLOROFORM	0	0	0	0	0	0	0	0	0	0									0		0		0	0	0	0	0		0	0	0	0		0	0	0	0	0	0			0		0			0		0	0			0	0	
1,2 DICHLOROPROPANE	0	0	0	0	0	0	0	0	0	0									0		0		0	0	0	0	0		0	0	0	0		0	0	0	0	0	0			0		0			0		0	0			0	0	
VINYL CHLORIDE	0	0	0	0	0	0	0	0	0	0									0		0		0	0	0	0	0		0	0	0	0		0	0	0	0	0	0			0		0			0		0	0			0	0	
PHENOL	0	0	0	0	0	0	0	0	0	0									0		0		0	0	0	0	0		0	0	0	0		0	0	0	0	0	0			0		0			0		0	0			0	0	
BENZOIC ACID	0	0	0	0	0	0	0	0	0	0									0		0		0	0	0	0	0		0	0	0	0		0	0	0	0	0	0			0		0			0		0	0			0	0	
FLUORENE	0	0	0	0	0	0	0	0	0	0									0		0		0	0	0	0	0		0	0	0	0		0	0	0	0	0	0			0		0			0		0	0			0	0	
HEXACHLOROCYCLOPENTADIENE	0	0	0	0	0	0	0	0	0	0									0		0		0	0	0	0	0		0	0	0	0		0	0	0	0	0	0			0		0			0		0	0			0	0	
2-METHYLNAPHTHALENE	0	0	0	0	0	0	0	0	0	0									0		0		0	0	0	0	0		0	0	0	0		0	0	0	0	0	0			0		0			0		0	0			0	0	
2-METHYLPHENOL	0	0	0	0	0	0	0	0	0	0									0		0		0	0	0	0	0		0	0	0	0		0	0	0	0	0	0			0		0			0		0	0			0	0	
4-METHYLPHENOL	0	0	0	0	0	0	0	0	0	0									0		0		0	0	0	0	0		0	0	0	0		0	0	0	0	0	0			0		0			0		0	0			0	0	
NAPHTHALENE	0	0	0	0	0	0	0	0	0	0									0		0		0	0	0	0	0		0	0	0	0		0	0	0	0	0	0			0		0			0		0	0			0	0	
2,4 DIMETHYLPHENOL	0	0	0	0	0	0	0	0	0	0									0		0		0	0	0	0	0		0	0	0	0		0	0	0	0	0	0			0		0			0		0	0			0	0	
Mass Flow Solids lb/hr																																																							
STEEL	56.42	0	0	0	56.42	0	0	0	56.42	0									0		0		0	0	0	56.42	56.42		0	0	0	0		56.42	0	0	0	0	0			0		0			0		0	0			0	0	
FIBERGLASS	0	0	0	0	0	0	0	0	0	0									0		0		0	0	0	0	0		0	0	0	0		0	0	0	0	0	0			0		0			0		0	0			0	0	
CELLULOSE ACETATE	0	0	0	0	0	0	0	0	0	0									0		0		0	0	0	0	0		0	0	0	0		0	0	0	0	0	0			0		0			0		0	0			0	0	
Total Average Flow lb/hr	68.64	307.302	500	1683	1034.635	25	2208.272	477.943	509.363	721.266	0	0	0	0	0	0	0	0	670.916	0	670.916	0	600	600	477.943	56.42	56.42	0	50.35	50.35	477.943	27	0	56.42	450.022	450.022	131.694	307.302	12.778	0	0	5974.177	0	5974.177	0	0	683.694	0	5974.177	5974.177	0	0	450.022	450.022	0
Notes	1																																																						

1 - All components in solid phase

Blayne Monen
Issued
2004/07/09

NO.	DATE	DESCRIPTION	DR	CK	DL	PE	APPD
0		ISSUED FOR DESIGN	NL	DG	AS	NW	DJ

QUALITY ☐ LEVEL 1 ☐ LEVEL 2 ☐ LEVEL 3 ☒ ALL

BECHTEL PARSONS BLUE GRASS
A Joint Venture of Bechtel National, INC. and Parsons Infrastructure & Technology Group Inc.

DOD PROGRAM MANAGER FOR ASSEMBLED CHEMICAL WEAPONS ASSESSMENT EDGEWOOD, MARYLAND

US ARMY ENGINEERING AND SUPPORT CENTER, HUNTSVILLE HUNTSVILLE, ALABAMA

GENERAL ATOMICS

BLUE GRASS CHEMICAL AGENT DESTRUCTION PILOT PLANT PROJECT (BGCAPP)
RICHMOND, KENTUCKY

CONTRACT NO. DAAA09–03–D–0023

ENERGETICS BATCH HYDROLIZER PROCESS FLOW DIAGRAM

DRAWING NUMBER 24915–07–M5–EBH–00001 | SHEET 5 OF 9 | REV 0

PROFESSIONAL STAMP

THIS DRAWING SUPERSEDES DWG NO 24915–07–M5–TCEH–0001

bgcapp_d3.dwg

CASE 4 – EBH M55 VX ROCKETS – RESULTS FOR ONE RM/WH EBH PAIR AT AVERAGE THROUGHPUT RATE

Stream Number:	1	2	3	4	5	6	7	8	9	10	11	13	14	15	16	17
Stream Description	Sheared RM Feed	Heated Fresh Caustic Feed 50% NaOH	RM EBH Make-up Water (Wall Wash)	Air Supply RM EBH	Representative Contents Inside RM EBH	Rinse Water RM Solids Discharge	Vent Discharge from RM EBH	Hydrolysate leaving Tank	Discharge from RM EBH	Steam Suppy for RM	Sheared WH Feed	WH EBH Make-up Water (Wall Wash)	Air Supply WH EBH	Representative Contents Inside WH EBH	Rinse Water WH Solids Discharge	Vent Discharge from WH EBH
Temperature F	77	248	142.4	85	248	142.4	185	225.6	248	300	77	134.1	85	242.6	134.1	130
Pressure psi	14.23	14.23	14.23	14.23	14.23	14.23	14.23	14.23	14.23	66.23	14.23	14.23	14.23	14.23	14.23	14.23
Instantaneous Flow gpm (ACFM)																
Density lb/cuft		89.87	61.334	0.069	0.174	61.334	0.05	72.937	70.555	0.15		61.483	0.069	0.091	61.483	0.062
Viscosity cP				0.018	0.013		0.019			0.014			0.018	0.014		0.019
Molecular Weight				28.392	18.032		24.306			18.015			28.391	15.909		27.608
Enthalpy MMBtu/hr	-0.183	-10.847	-3.38	-0.294	-18.895	-2.098	-4.189	-16.536	-3.052	-7.169	-0.006	-3.384	-4.908	-15.022	-2.101	-10.307
Mass Flow lb/hr																
N2	0	0	0	1252	0	0	1252	0	0	0	0	0	21657.788	0	0	21657.788
O2	0	0	0	380.5	0.055	0	380.555	0	0	0	0	0	6579.224	3.033	0	6582.257
N2O	0	0	0	0	0	0	0	0.021	0	0	0	0	0	4.172	0	4.15
H2	0	0	0	0	0	0	0	0	0	0	0	0	0	17.784	0	17.784
H2O	0	953.853	500	50.5	2334.803	310.414	738.365	1822.355	335.702	1262.328	0	500	847.11	1872.41	310.414	1853.695
PROPYLENE GLYCOL	0	0	0	0	0	0	0	0	0	0	0	0	0	0	0	0
AMMONIA	0	0	0	0	0	0	0	0.061	0	0	0	0	0	9.262	0	9.201
NITRODIPHENYLAMINE	4.89	0	0	0	1.247	0	0.002	1.245	0.254	0	0	0	0	0.992	0	0.001
NITROSODIPHENYLAMINE	0	0	0	0	0.679	0	0	0.678	0.138	0	0	0	0	0.54	0	0.001
NITROPHENOL	0	0	0	0	3.778	0	0.004	3.768	0.769	0	0	0	0	3.005	0	0.006
NAOH	0	953.853	0	0	714.914	0	0	433.866	145.723	0	0	0	0	288.142	0	0
NITROCELLULOSE	172.54	0	0	0	0	0	0	0	0	0	0	0	0	0	0	0
NITROGLYCERIN	68.44	0	0	0	0	0	0.126	0	0	0	0	0	0	0	0	0
TRIACETIN	28.47	0	0	0	0	0	0.094	0	0	0	0	0	0	0	0	0
DIETHYLPHTHALATE	7.48	0	0	0	2.242	0	0.012	2.23	0.456	0	0	0	0	1.781	0	0.007
DIMETHYLPHTHALATE	0	0	0	0	4.57	0	0.021	4.517	0.927	0	0	0	0	3.622	0	0.033
ETHANOL	0	0	0	0	1.084	0	0.95	0.033	0.027	0	0	0	0	0.107	0	0.1
LEAD STEARATE	5.75	0	0	0	0	0	0	0	0	0	0	0	0	0	0	0
SODIUM STEARATE	0	0	0	0	4.553	0	0	4.552	0.928	0	0	0	0	3.625	0	0
LEAD OXIDE	0	0	0	0	1.658	0	0	1.658	0.338	0	0	0	0	1.32	0	0
PCB	0.1	0	0	0	0.1	0	0	0	0.1	0	0.16	0	0	0.16	0	0
TETRYL	0	0	0	0	0	0	0	0	0	0	0	0	0	0	0	0
RDX	0	0	0	0	0	0	0	0	0	0	28.07	0	0	0	0	0
TNT	0	0	0	0	0	0	0	0	0	0	18.71	0	0	0	0	0
ALUMINUM	0	0	0	0	0	0	0	0	0	0	158.69	0	0	0	0	0
NANO2	0	0	0	0	125.388	0	0	144.15	25.558	0	0	0	0	118.592	0	0
NANO3	0	0	0	0	70.308	0	0	70.308	14.331	0	0	0	0	55.977	0	0
NACHO2	0	0	0	0	99.441	0	0	153.234	20.269	0	0	0	0	132.965	0	0
NAC2H3O2	0	0	0	0	151.955	0	0	158.712	30.974	0	0	0	0	127.739	0	0
GLYCEROL	0	0	0	0	11.976	0	0.009	11.954	2.439	0	0	0	0	9.528	0	0.013
NAALO2	0	0	0	0	0	0	0	482.101	0	0	0	0	0	482.101	0	0
ACETONE	0	0	0	0	0	0	0	0	0	0	0	0	0	0	0	0
BENZENE	0	0	0	0	0	0	0	0	0	0	0	0	0	0	0	0
1,2 DICHLOROETHANE	0	0	0	0	0	0	0	0	0	0	0	0	0	0	0	0
ETHYLBENZENE	0	0	0	0	0	0	0	0	0	0	0	0	0	0	0	0
METHYLENE CHLORIDE	0	0	0	0	0	0	0	0	0	0	0	0	0	0	0	0
STYRENE	0	0	0	0	0	0	0	0	0	0	0	0	0	0	0	0
TOLUENE	0	0	0	0	0	0	0	0	0	0	0	0	0	0	0	0
2-BUTANONE	0	0	0	0	0	0	0	0	0	0	0	0	0	0	0	0
XYLENE	0	0	0	0	0	0	0	0	0	0	0	0	0	0	0	0
CHLOROETHANE	0	0	0	0	0	0	0	0	0	0	0	0	0	0	0	0
2-HEXANONE	0	0	0	0	0	0	0	0	0	0	0	0	0	0	0	0
CHLOROFORM	0	0	0	0	0	0	0	0	0	0	0	0	0	0	0	0
1,2 DICHLOROPROPANE	0	0	0	0	0	0	0	0	0	0	0	0	0	0	0	0
VINYL CHLORIDE	0	0	0	0	0	0	0	0	0	0	0	0	0	0	0	0
PHENOL	0	0	0	0	0	0	0	0	0	0	0	0	0	0	0	0
BENZOIC ACID	0	0	0	0	0	0	0	0	0	0	0	0	0	0	0	0
FLUORENE	0	0	0	0	0	0	0	0	0	0	0	0	0	0	0	0
HEXACHLOROCYCLOPENTADIENE	0	0	0	0	0	0	0	0	0	0	0	0	0	0	0	0
2-METHYLNAPHTHALENE	0	0	0	0	0	0	0	0	0	0	0	0	0	0	0	0
2-METHYLPHENOL	0	0	0	0	0	0	0	0	0	0	0	0	0	0	0	0
4-METHYLPHENOL	0	0	0	0	0	0	0	0	0	0	0	0	0	0	0	0
NAPHTHALENE	0	0	0	0	0	0	0	0	0	0	0	0	0	0	0	0
2,4 DIMETHYLPHENOL	0	0	0	0	0	0	0	0	0	0	0	0	0	0	0	0
Mass Flow Solids lb/hr																
STEEL	187.55	0	0	0	187.55	0	0	0	187.55	0	50.66	0	0	50.66	0	0
FIBERGLASS	78.87	0	0	0	78.87	0	0	0	78.87	0	125	0	0	125	0	0
CELLULOSE ACETATE	13.75	0	0	0	13.75	0	0	0	13.75	0	0	0	0	0	0	0
Total Average Flow lb/hr	567.84	1907.706	500	1683	3808.921	310.414	2372.138	3295.443	859.103	1262.328	381.29	500	29084.122	3312.517	310.414	30125.036
Notes	1				2				2		1			2		
1 - All components in solid phase																
2 - PCB in solid phase																

Stream Number:	18	19	20	21	22	23	26	27	41	42	43	44	46	48	49	51	52	53
Stream Description	Energetic Hydrolysate Exiting WH EBH	Discharge from WH EBH	Steam Supply to RM EBH	Steam Supply to WH EBH	Condensate from RM EBH	Condensate from WH EBH	Nitrogen Purge to HDC	HDC Flue Gas	Energetic Hydrolysate to ENR	Insoluble Solids to HDC	HDC Residues at Discharge	Hydrolysate Dilution Water for WH	Steam Supply to Caustic Feed	Condensate Return from Caustic Feed	RM Hydrolysate to ENR	RM Load Chute Rinse Water	WH Load Chute Rinse Water	HDC Residues at Entrance
Temperature F	227.9	242.6	300	300	299	299	77	1100	225.6	223.2		134.1	300	299	219.9	142.4	134.1	
Pressure psi	14.23	14.23	66.23	66.23	66.23	66.23	14.23	14.23	14.23	14.23	14.23	14.23	66.23	66.23	14.23	14.23	14.23	14.23
Instantaneous Flow gpm (ACFM)																		
Density lb/cuft	72.846	72.050	0.15	0.15	57.329	57.329	0.069	0.026	72.937			61.483	0.15	57.329	70.1303695	61.334	61.483	
Viscosity cP			0.014	0.014			0.018	0.037					0.014					
Molecular Weight			18.015	18.015			28.013	30.764					18.015					
Enthalpy MMBtu/hr	-11.387	-9.286	-5.394	-2.806	-6.27	-3.261	0	0.157	-16.536			-1.044	-1.775	-2.064	-5.149	-0.108	-0.108	
Mass Flow lb/hr																		
N2	0	0	0	0	0	0	600	600	0	0	0	0	0	0	0	0	0	0
O2	0	0	0	0	0	0	0	0	0	0	0	0	0	0	0	0	0	0
N2O	0.021	0.021	0	0	0	0	0	0	0.021	0	0	0	0	0	0	0	0	0
H2	0	0	0	0	0	0	0	0	0	0	0	0	0	0	0	0	0	0
H2O	1176.239	865.825	949.758	493.97	949.758	493.97	0	0	1822.355	0	0	154.32	312.57	312.57	646.116	16	16	0
PROPYLENE GLYCOL	0	0	0	0	0	0	0	0	0	0	0	0	0	0	0	0	0	0
AMMONIA	0.061	0.061	0	0	0	0	0	0	0.061	0	0	0	0	0	0	0	0	0
NITRODIPHENYLAMINE	0.991	0.991	0	0	0	0	0	0	1.245	0	0	0	0	0	0.254	0	0	0
NITROSODIPHENYLAMINE	0.539	0.539	0	0	0	0	0	0	0.678	0	0	0	0	0	0.138	0	0	0
NITROPHENOL	2.999	2.999	0	0	0	0	0	0	3.768	0	0	0	0	0	0.769	0	0	0
NAOH	288.142	288.142	0	0	0	0	0	0	433.866	0	0	0	0	0	145.723	0	0	0
NITROCELLULOSE	0	0	0	0	0	0	0	0	0	0	0	0	0	0	0	0	0	0
NITROGLYCERIN	0	0	0	0	0	0	0	0	0	0	0	0	0	0	0	0	0	0
TRIACETIN	0	0	0	0	0	0	0	0	0	0	0	0	0	0	0	0	0	0
DIETHYLPHTHALATE	1.774	1.774	0	0	0	0	0	0	2.23	0	0	0	0	0	0.456	0	0	0
DIMETHYLPHTHALATE	3.589	3.589	0	0	0	0	0	0	4.517	0	0	0	0	0	0.927	0	0	0
ETHANOL	0.006	0.006	0	0	0	0	0	0	0.033	0	0	0	0	0	0.027	0	0	0
LEAD STEARATE	0	0	0	0	0	0	0	0	0	0	0	0	0	0	0	0	0	0
SODIUM STEARATE	3.625	3.625	0	0	0	0	0	0	4.552	0	0	0	0	0	0.928	0	0	0
LEAD OXIDE	1.32	1.32	0	0	0	0	0	0	1.658	0	0	0	0	0	0.338	0	0	0
PCB	0	0.16	0	0	0	0	0	0.26	0	0.26	0	0	0	0	0	0	0	0.26
TETRYL	0	0	0	0	0	0	0	0	0	0	0	0	0	0	0	0	0	0
RDX	0	0	0	0	0	0	0	0	0	0	0	0	0	0	0	0	0	0
TNT	0	0	0	0	0	0	0	0	0	0	0	0	0	0	0	0	0	0
ALUMINUM	0	0	0	0	0	0	0	0	0	0	0	0	0	0	0	0	0	0
NANO2	118.592	118.592	0	0	0	0	0	0	144.15	0	0	0	0	0	25.558	0	0	0
NANO3	55.977	55.977	0	0	0	0	0	0	70.308	0	0	0	0	0	14.331	0	0	0
NACHO2	132.965	132.965	0	0	0	0	0	0	153.234	0	0	0	0	0	20.269	0	0	0
NAC2H3O2	127.739	127.739	0	0	0	0	0	0	158.712	0	0	0	0	0	30.974	0	0	0
GLYCEROL	9.515	9.515	0	0	0	0	0	0	11.954	0	0	0	0	0	2.439	0	0	0
NAALO2	482.101	482.101	0	0	0	0	0	0	482.101	0	0	0	0	0	0	0	0	0
ACETONE	0	0	0	0	0	0	0	6.795	0	0	0	0	0	0	0	0	0	0
BENZENE	0	0	0	0	0	0	0	3.398	0	0	0	0	0	0	0	0	0	0
1,2 DICHLOROETHANE	0	0	0	0	0	0	0	5.37	0	0	0	0	0	0	0	0	0	0
ETHYLBENZENE	0	0	0	0	0	0	0	5.37	0	0	0	0	0	0	0	0	0	0
METHYLENE CHLORIDE	0	0	0	0	0	0	0	0.004	0	0	0	0	0	0	0	0	0	0
STYRENE	0	0	0	0	0	0	0	1.096	0	0	0	0	0	0	0	0	0	0
TOLUENE	0	0	0	0	0	0	0	4.603	0	0	0	0	0	0	0	0	0	0
2-BUTANONE	0	0	0	0	0	0	0	0.822	0	0	0	0	0	0	0	0	0	0
XYLENE	0	0	0	0	0	0	0	0.072	0	0	0	0	0	0	0	0	0	0
CHLOROETHANE	0	0	0	0	0	0	0	3.507	0	0	0	0	0	0	0	0	0	0
2-HEXANONE	0	0	0	0	0	0	0	0.023	0	0	0	0	0	0	0	0	0	0
CHLOROFORM	0	0	0	0	0	0	0	0.007	0	0	0	0	0	0	0	0	0	0
1,2 DICHLOROPROPANE	0	0	0	0	0	0	0	0.035	0	0	0	0	0	0	0	0	0	0
VINYL CHLORIDE	0	0	0	0	0	0	0	0.778	0	0	0	0	0	0	0	0	0	0
PHENOL	0	0	0	0	0	0	0	15.343	0	0	0	0	0	0	0	0	0	0
BENZOIC ACID	0	0	0	0	0	0	0	6.137	0	0	0	0	0	0	0	0	0	0
FLUORENE	0	0	0	0	0	0	0	0.208	0	0	0	0	0	0	0	0	0	0
HEXACHLOROCYCLOPENTADIENE	0	0	0	0	0	0	0	24.111	0	0	0	0	0	0	0	0	0	0
2-METHYLNAPHTHALENE	0	0	0	0	0	0	0	0.778	0	0	0	0	0	0	0	0	0	0
2-METHYLPHENOL	0	0	0	0	0	0	0	1.206	0	0	0	0	0	0	0	0	0	0
4-METHYLPHENOL	0	0	0	0	0	0	0	0.351	0	0	0	0	0	0	0	0	0	0
NAPHTHALENE	0	0	0	0	0	0	0	1.206	0	0	0	0	0	0	0	0	0	0
2,4 DIMETHYLPHENOL	0	0	0	0	0	0	0	0.197	0	0	0	0	0	0	0	0	0	0
Mass Flow Solids lb/hr																		
STEEL	0	50.66	0	0	0	0	0	0	0	238.21	238.21	0	0	0	0	0	0	238.21
FIBERGLASS	0	125	0	0	0	0	0	0	0	203.87	131.292	0	0	0	0	0	0	203.87
CELLULOSE ACETATE	0	0	0	0	0	0	0	0	0	13.75	4.909	0	0	0	0	0	0	13.75
Total Average Flow lb/hr	2406.195	2271.601	949.758	493.97	949.758	493.97	600	681.677	3295.443	456.09	374.411	154.32	312.57	312.57	889.247	16	16	456.09
Notes		2								2								2

Stream Number:	54	55	62	63	64	65	66	70	71	72	73	74	75	76	77	78	79	80	81	82	83
Stream Description	C. Water to Secondary Cooling HX, Cooling Conveyor	C. Water from Secondary Cooling HX, Cooling Conveyor	Caustic Feed Dilution Water for RM	Fresh Caustic Feed, 50% NaOH	Make-up Process Water RM EBH	Make-up Process Water WH EBH	Plant steam deamands WH Processing	Chilled Water to Secondary HX Condenser RM	Chilled Water to Secondary HX Condenser WH	Chilled Water RM Secondary HX Condenser RM	Chilled Water FM Secondary HX Condenser WH	Excess Condensate	Total Process Water to RM EBH	Total Process Water to WH EBH	Secondary loop to Condesate Cooler RM	Secondary loop from Condesate Cooler RM	Secondary loop to Condesate Cooler WH	Secondary loop from Condesate Cooler WH	Secondary loop to Cooling Conveyor	Secondary loop From Cooling Conveyor	Deluge Water
Temperature F	45	60	142.4	77	77	77	300	45	45	60	60		142.4	134.1	45	60	45	60	45	60	
Pressure psi	50	50	14.23	14.23	14.23	14.23	66.23	100	100	100	100		14.23	14.23	100	100	100	100	50	50	
Instantaneous Flow gpm (ACFM)																					
Density lb/cuft	63.993	63.776	61.334	93.844	62.251	62.251	0.15	64	64	63.782	63.782		61.334	61.483	64	63.782	64	63.782	63.993	63.776	
Viscosity cP							0.014														
Molecular Weight							18.015														
Enthalpy MMBtu/hr	-19.262	-19.217	-5.527	-11.135	-4.739	-3.322	-2.806	-44.143	-22.959	-44.038	-22.904		-11.114	-6.638	-44.143	-44.038	-22.959	-22.904	-19.262	-19.217	
Mass Flow lb/hr																					
N2	0	0	0	0	0	0	0	0	0	0	0		0	0	0	0	0	0	0	0	
O2	0	0	0	0	0	0	0	0	0	0	0		0	0	0	0	0	0	0	0	
N2O	0	0	0	0	0	0	0	0	0	0	0		0	0	0	0	0	0	0	0	
H2	0	0	0	0	0	0	0	0	0	0	0		0	0	0	0	0	0	0	0	
H2O	2214.178	2214.178	817.598	953.853	694.254	486.764	493.97	5074.281	2639.136	5074.281	2639.136		1644.012	980.734	5074.281	5074.281	2639.136	2639.136	2214.178	2214.178	
PROPYLENE GLYCOL	1476.119	1476.119	0	0	0	0	0	3382.854	1759.424	3382.854	1759.424		0	0	3382.854	3382.854	1759.424	1759.424	1476.119	1476.119	
AMMONIA	0	0	0	0	0	0	0	0	0	0	0		0	0	0	0	0	0	0	0	
NITRODIPHENYLAMINE	0	0	0	0	0	0	0	0	0	0	0		0	0	0	0	0	0	0	0	
NITROSODIPHENYLAMINE	0	0	0	0	0	0	0	0	0	0	0		0	0	0	0	0	0	0	0	
NITROPHENOL	0	0	0	0	0	0	0	0	0	0	0		0	0	0	0	0	0	0	0	
NAOH	0	0	0	953.853	0	0	0	0	0	0	0		0	0	0	0	0	0	0	0	
NITROCELLULOSE	0	0	0	0	0	0	0	0	0	0	0		0	0	0	0	0	0	0	0	
NITROGLYCERIN	0	0	0	0	0	0	0	0	0	0	0		0	0	0	0	0	0	0	0	
TRIACETIN	0	0	0	0	0	0	0	0	0	0	0		0	0	0	0	0	0	0	0	
DIETHYLPHTHALATE	0	0	0	0	0	0	0	0	0	0	0		0	0	0	0	0	0	0	0	
DIMETHYLPHTHALATE	0	0	0	0	0	0	0	0	0	0	0		0	0	0	0	0	0	0	0	
ETHANOL	0	0	0	0	0	0	0	0	0	0	0		0	0	0	0	0	0	0	0	
LEAD STEARATE	0	0	0	0	0	0	0	0	0	0	0		0	0	0	0	0	0	0	0	
SODIUM STEARATE	0	0	0	0	0	0	0	0	0	0	0		0	0	0	0	0	0	0	0	
LEAD OXIDE	0	0	0	0	0	0	0	0	0	0	0		0	0	0	0	0	0	0	0	
PCB	0	0	0	0	0	0	0	0	0	0	0		0	0	0	0	0	0	0	0	
TETRYL	0	0	0	0	0	0	0	0	0	0	0		0	0	0	0	0	0	0	0	
RDX	0	0	0	0	0	0	0	0	0	0	0		0	0	0	0	0	0	0	0	
TNT	0	0	0	0	0	0	0	0	0	0	0		0	0	0	0	0	0	0	0	
ALUMINUM	0	0	0	0	0	0	0	0	0	0	0		0	0	0	0	0	0	0	0	
NANO2	0	0	0	0	0	0	0	0	0	0	0		0	0	0	0	0	0	0	0	
NANO3	0	0	0	0	0	0	0	0	0	0	0		0	0	0	0	0	0	0	0	
NACHO2	0	0	0	0	0	0	0	0	0	0	0		0	0	0	0	0	0	0	0	
NAC2H3O2	0	0	0	0	0	0	0	0	0	0	0		0	0	0	0	0	0	0	0	
GLYCEROL	0	0	0	0	0	0	0	0	0	0	0		0	0	0	0	0	0	0	0	
NAALO2	0	0	0	0	0	0	0	0	0	0	0		0	0	0	0	0	0	0	0	
ACETONE	0	0	0	0	0	0	0	0	0	0	0		0	0	0	0	0	0	0	0	
BENZENE	0	0	0	0	0	0	0	0	0	0	0		0	0	0	0	0	0	0	0	
1,2 DICHLOROETHANE	0	0	0	0	0	0	0	0	0	0	0		0	0	0	0	0	0	0	0	
ETHYLBENZENE	0	0	0	0	0	0	0	0	0	0	0		0	0	0	0	0	0	0	0	
METHYLENE CHLORIDE	0	0	0	0	0	0	0	0	0	0	0		0	0	0	0	0	0	0	0	
STYRENE	0	0	0	0	0	0	0	0	0	0	0		0	0	0	0	0	0	0	0	
TOLUENE	0	0	0	0	0	0	0	0	0	0	0		0	0	0	0	0	0	0	0	
2-BUTANONE	0	0	0	0	0	0	0	0	0	0	0		0	0	0	0	0	0	0	0	
XYLENE	0	0	0	0	0	0	0	0	0	0	0		0	0	0	0	0	0	0	0	
CHLOROETHANE	0	0	0	0	0	0	0	0	0	0	0		0	0	0	0	0	0	0	0	
2-HEXANONE	0	0	0	0	0	0	0	0	0	0	0		0	0	0	0	0	0	0	0	
CHLOROFORM	0	0	0	0	0	0	0	0	0	0	0		0	0	0	0	0	0	0	0	
1,2 DICHLOROPROPANE	0	0	0	0	0	0	0	0	0	0	0		0	0	0	0	0	0	0	0	
VINYL CHLORIDE	0	0	0	0	0	0	0	0	0	0	0		0	0	0	0	0	0	0	0	
PHENOL	0	0	0	0	0	0	0	0	0	0	0		0	0	0	0	0	0	0	0	
BENZOIC ACID	0	0	0	0	0	0	0	0	0	0	0		0	0	0	0	0	0	0	0	
FLUORENE	0	0	0	0	0	0	0	0	0	0	0		0	0	0	0	0	0	0	0	
HEXACHLOROCYCLOPENTADIENE	0	0	0	0	0	0	0	0	0	0	0		0	0	0	0	0	0	0	0	
2-METHYLNAPHTHALENE	0	0	0	0	0	0	0	0	0	0	0		0	0	0	0	0	0	0	0	
2-METHYLPHENOL	0	0	0	0	0	0	0	0	0	0	0		0	0	0	0	0	0	0	0	
4-METHYLPHENOL	0	0	0	0	0	0	0	0	0	0	0		0	0	0	0	0	0	0	0	
NAPHTHALENE	0	0	0	0	0	0	0	0	0	0	0		0	0	0	0	0	0	0	0	
2,4 DIMETHYLPHENOL	0	0	0	0	0	0	0	0	0	0	0		0	0	0	0	0	0	0	0	
Mass Flow Solids lb/hr																					
STEEL	0	0	0	0	0	0	0	0	0	0	0		0	0	0	0	0	0	0	0	
FIBERGLASS	0	0	0	0	0	0	0	0	0	0	0		0	0	0	0	0	0	0	0	
CELLULOSE ACETATE	0	0	0	0	0	0	0	0	0	0	0		0	0	0	0	0	0	0	0	
Total Average Flow lb/hr	3690.297	3690.297	817.598	1907.706	694.254	486.764	493.97	8457.135	4398.56	8457.135	4398.56	0	1644.012	980.734	8457.135	8457.135	4398.56	4398.56	3690.297	3690.297	0

Blayne Monen
Issued
2004/07/09

NO.	DATE	DESCRIPTION	DR	CK	DL	PE	APPD
0		ISSUED FOR DESIGN	NL	DG	AS	NW	DJ

QUALITY ☐ LEVEL 1 ☐ LEVEL 2 ☐ LEVEL 3 ☒ ALL

BECHTEL PARSONS BLUE GRASS
A Joint Venture of Bechtel National, INC. and Parsons Infrastructure & Technology Group Inc.

DOD PROGRAM MANAGER FOR ASSEMBLED CHEMICAL WEAPONS ASSESSMENT EDGEWOOD, MARYLAND

US ARMY ENGINEERING AND SUPPORT CENTER, HUNTSVILLE HUNTSVILLE, ALABAMA

GENERAL ATOMICS

BLUE GRASS CHEMICAL AGENT DESTRUCTION PILOT PLANT PROJECT (BGCAPP)
RICHMOND, KENTUCKY

CONTRACT NO. DAAA09-03-D-0023

ENERGETICS BATCH HYDROLIZER PROCESS FLOW DIAGRAM

THIS DRAWING SUPERSEDES DWG NO 24915-07-M5-TCEH-0001

PROFESSIONAL STAMP

DRAWING NUMBER 24915-07-M5-EBH-00001

SHEET 6 OF 9

REV 0

bgcapp_d3.dwg

CASE 5 – EBH M55 GB ROCKETS – RESULTS FOR ONE RM/WH EBH PAIR AT AVERAGE THROUGHPUT RATE

Stream Number:	1	2	3	4	5	6	7	8	9	10	11	13	14	15	16
Stream Description	Sheared RM Feed	Heated Fresh Caustic Feed 50% NaOH	RM EBH Make-up Water (Wall Wash)	Air Supply RM EBH	Representative Contents Inside RM EBH	Rinse Water RM Solids Discharge	Vent Discharge from RM EBH	Hydrolysate leaving Tank	Discharge from RM EBH	Steam Suppy for RM	Sheared WH Feed	WH EBH Make-up Water (Wall Wash)	Air Supply WH EBH	Representative Contents Inside WH EBH	Rinse Water WH Solids Discharge
Temperature F	77	248	147.4	85	248	147.4	185	227	248	300	77	140.2	85	242.6	140.2
Pressure psi	14.23	14.23	14.23	14.23	14.23	14.23	14.23	14.23	14.23	66.23	14.23	14.23	14.23	14.23	14.23
Instantaneous Flow gpm (ACFM)															
Density lb/cuft		89.87	61.241	0.069	0.156	61.241	0.05	72.785	70.557	0.15		61.375	0.069	0.087	61.375
Viscosity cP				0.018	0.013		0.019			0.014			0.018	0.014	
Molecular Weight				28.392	18.03		24.422			18.015			28.391	16.056	
Enthalpy MMBtu/hr	-0.152	-9.027	-3.378	-0.294	-16.201	-1.745	-4.005	-13.832	-2.54	-6.605	-0.005	-3.381	-4.084	-12.994	-1.747
Mass Flow lb/hr															
N2	0	0	0	1252	0	0	1252	0	0	0	0	0	18023.368	0	0
O2	0	0	0	380.5	0.046	0	380.546	0	0	0	0	0	5475.156	2.524	0
N2O	0	0	0	0	0	0	0	0.017	0	0	0	0	0	3.472	0
H2	0	0	0	0	0	0	0	0	0	0	0	0	0	14.8	0
H2O	0	793.81	500	50.5	2026.619	258.331	706.375	1527.506	279.382	1162.984	0	500	704.956	1642.711	258.331
PROPYLENE GLYCOL	0	0	0	0	0	0	0	0	0	0	0	0	0	0	0
AMMONIA	0	0	0	0	0	0	0	0.048	0	0	0	0	0	7.708	0
NITRODIPHENYLAMINE	4.07	0	0	0	1.038	0	0.002	1.036	0.211	0	0	0	0	0.826	0
NITROSODIPHENYLAMINE	0	0	0	0	0.565	0	0	0.564	0.115	0	0	0	0	0.449	0
NITROPHENOL	0	0	0	0	3.144	0	0.003	3.135	0.64	0	0	0	0	2.501	0
NAOH	0	793.81	0	0	594.998	0	0	361.113	121.271	0	0	0	0	239.842	0
NITROCELLULOSE	143.59	0	0	0	0	0	0	0	0	0	0	0	0	0	0
NITROGLYCERIN	56.96	0	0	0	0	0	0.135	0	0	0	0	0	0	0	0
TRIACETIN	23.69	0	0	0	0	0	0.1	0	0	0	0	0	0	0	0
DIETHYLPHTHALATE	6.22	0	0	0	1.864	0	0.013	1.852	0.379	0	0	0	0	1.48	0
DIMETHYLPHTHALATE	0	0	0	0	3.799	0	0.02	3.751	0.77	0	0	0	0	3.009	0
ETHANOL	0	0	0	0	0.901	0	0.803	0.024	0.02	0	0	0	0	0.079	0
LEAD STEARATE	4.79	0	0	0	0	0	0	0	0	0	0	0	0	0	0
SODIUM STEARATE	0	0	0	0	3.793	0	0	3.792	0.773	0	0	0	0	3.02	0
LEAD OXIDE	0	0	0	0	1.381	0	0	1.381	0.281	0	0	0	0	1.099	0
PCB	0.08	0	0	0	0.08	0	0	0	0.08	0	0.13	0	0	0.13	0
TETRYL	0	0	0	0	0	0	0	0	0	0	0	0	0	0	0
RDX	0	0	0	0	0	0	0	0	0	0	23.36	0	0	0	0
TNT	0	0	0	0	0	0	0	0	0	0	15.57	0	0	0	0
ALUMINUM	0	0	0	0	0	0	0	0	0	0	132.06	0	0	0	0
NANO2	0	0	0	0	104.334	0	0	119.947	21.265	0	0	0	0	98.682	0
NANO3	0	0	0	0	58.501	0	0	58.501	11.923	0	0	0	0	46.577	0
NACHO2	0	0	0	0	82.748	0	0	127.514	16.865	0	0	0	0	110.649	0
NAC2H3O2	0	0	0	0	126.42	0	0	132.044	25.767	0	0	0	0	106.277	0
GLYCEROL	0	0	0	0	9.956	0	0.008	9.936	2.028	0	0	0	0	7.92	0
NAALO2	0	0	0	0	0	0	0	401.199	0	0	0	0	0	401.199	0
ACETONE	0	0	0	0	0	0	0	0	0	0	0	0	0	0	0
BENZENE	0	0	0	0	0	0	0	0	0	0	0	0	0	0	0
1,2 DICHLOROETHANE	0	0	0	0	0	0	0	0	0	0	0	0	0	0	0
ETHYLBENZENE	0	0	0	0	0	0	0	0	0	0	0	0	0	0	0
METHYLENE CHLORIDE	0	0	0	0	0	0	0	0	0	0	0	0	0	0	0
STYRENE	0	0	0	0	0	0	0	0	0	0	0	0	0	0	0
TOLUENE	0	0	0	0	0	0	0	0	0	0	0	0	0	0	0
2-BUTANONE	0	0	0	0	0	0	0	0	0	0	0	0	0	0	0
XYLENE	0	0	0	0	0	0	0	0	0	0	0	0	0	0	0
CHLOROETHANE	0	0	0	0	0	0	0	0	0	0	0	0	0	0	0
2-HEXANONE	0	0	0	0	0	0	0	0	0	0	0	0	0	0	0
CHLOROFORM	0	0	0	0	0	0	0	0	0	0	0	0	0	0	0
1,2 DICHLOROPROPANE	0	0	0	0	0	0	0	0	0	0	0	0	0	0	0
VINYL CHLORIDE	0	0	0	0	0	0	0	0	0	0	0	0	0	0	0
PHENOL	0	0	0	0	0	0	0	0	0	0	0	0	0	0	0
BENZOIC ACID	0	0	0	0	0	0	0	0	0	0	0	0	0	0	0
FLUORENE	0	0	0	0	0	0	0	0	0	0	0	0	0	0	0
HEXACHLOROCYCLOPENTADIENE	0	0	0	0	0	0	0	0	0	0	0	0	0	0	0
2-METHYLNAPHTHALENE	0	0	0	0	0	0	0	0	0	0	0	0	0	0	0
2-METHYLPHENOL	0	0	0	0	0	0	0	0	0	0	0	0	0	0	0
4-METHYLPHENOL	0	0	0	0	0	0	0	0	0	0	0	0	0	0	0
NAPHTHALENE	0	0	0	0	0	0	0	0	0	0	0	0	0	0	0
2,4 DIMETHYLPHENOL	0	0	0	0	0	0	0	0	0	0	0	0	0	0	0
Mass Flow Solids lb/hr															
STEEL	156.08	0	0	0	156.08	0	0	0	156.08	0	42.16	0	0	42.16	0
FIBERGLASS	65.64	0	0	0	65.64	0	0	0	65.64	0	104.03	0	0	104.03	0
CELLULOSE ACETATE	11.45	0	0	0	11.45	0	0	0	11.45	0	0	0	0	0	0
Total Average Flow lb/hr	472.57	1587.62	500	1683	3253.357	258.331	2340.005	2753.36	714.94	1162.984	317.31	500	24203.48	2841.144	258.331
Notes	1				2				2		1			2	

Stream Number:	17	18	19	20	21	22	23	26	27	41	42	43	44	46	48	49	51	52	53
Stream Description	Vent Discharge from WH EBH	Energetic Hydrolysate Exiting WH EBH	Discharge from WH EBH	Steam Supply to RM EBH	Steam Supply to WH EBH	Condensate from RM EBH	Condensate from WH EBH	Nitrogen Purge to HDC	HDC Flue Gas	Energetic Hydrolysate to ENR	Insoluble Solids to HDC	HDC Residues at Discharge	Hydrolysate Dilution Water for WH	Steam Supply to Caustic Feed	Condensate Return from Caustic Feed	RM Hydrolysate to ENR	RM Load Chute Rinse Water	WH Load Chute Rinse Water	HDC Residues at Entrance
Temperature F	130	229	242.6	300	300	299	299	77	1100	227	224.8		140.2	300	299	221.8	147.4	140.2	
Pressure psi	14.23	14.23	14.23	66.23	66.23	66.23	66.23	14.23	14.23	14.23	14.23	14.23	14.23	66.23	66.23	14.23	14.23	14.23	14.23
Instantaneous Flow gpm (ACFM)																			
Density lb/cuft	0.062	72.724	72.072	0.15	0.15	57.329	57.329	0.069	0.026	72.785			61.375	0.15	57.329	70.075	61.241	61.375	
Viscosity cP	0.019			0.014	0.014			0.018	0.037					0.014					
Molecular Weight	27.565			18.015	18.015			28.013	30.316					18.015					
Enthalpy MMBtu/hr	-9.001	-9.548	-7.801	-5.128	-2.854	-5.96	-3.317	0	0.157	-13.832			-0.874	-1.477	-1.717	-4.284	-0.088	-0.088	
Mass Flow lb/hr																			
N2	18023.368	0	0	0	0	0	0	600	600	0	0	0	0	0	0	0	0	0	0
O2	5477.68	0	0	0	0	0	0	0	0	0	0	0	0	0	0	0	0	0	0
N2O	3.455	0.017	0.017	0	0	0	0	0	0	0.017	0	0	0	0	0	0	0	0	0
H2	14.8	0	0	0	0	0	0	0	0	0	0	0	0	0	0	0	0	0	0
H2O	1616.204	989.793	731.462	902.859	502.406	902.859	502.406	0	0	1527.506	0	0	129.179	260.125	260.125	537.713	13	13	0
PROPYLENE GLYCOL	0	0	0	0	0	0	0	0	0	0	0	0	0	0	0	0	0	0	0
AMMONIA	7.66	0.048	0.048	0	0	0	0	0	0	0.048	0	0	0	0	0	0	0	0	0
NITRODIPHENYLAMINE	0.001	0.825	0.825	0	0	0	0	0	0	1.036	0	0	0	0	0	0.211	0	0	0
NITROSODIPHENYLAMINE	0	0.449	0.449	0	0	0	0	0	0	0.564	0	0	0	0	0	0.115	0	0	0
NITROPHENOL	0.006	2.495	2.495	0	0	0	0	0	0	3.135	0	0	0	0	0	0.64	0	0	0
NAOH	0	239.842	239.842	0	0	0	0	0	0	361.113	0	0	0	0	0	121.271	0	0	0
NITROCELLULOSE	0	0	0	0	0	0	0	0	0	0	0	0	0	0	0	0	0	0	0
NITROGLYCERIN	0	0	0	0	0	0	0	0	0	0	0	0	0	0	0	0	0	0	0
TRIACETIN	0	0	0	0	0	0	0	0	0	0	0	0	0	0	0	0	0	0	0
DIETHYLPHTHALATE	0.007	1.474	1.474	0	0	0	0	0	0	1.852	0	0	0	0	0	0.379	0	0	0
DIMETHYLPHTHALATE	0.029	2.98	2.98	0	0	0	0	0	0	3.751	0	0	0	0	0	0.77	0	0	0
ETHANOL	0.074	0.004	0.004	0	0	0	0	0	0	0.024	0	0	0	0	0	0.02	0	0	0
LEAD STEARATE	0	0	0	0	0	0	0	0	0	0	0	0	0	0	0	0	0	0	0
SODIUM STEARATE	0	3.019	3.019	0	0	0	0	0	0	3.792	0	0	0	0	0	0.773	0	0	0
LEAD OXIDE	0	1.099	1.099	0	0	0	0	0	0	1.381	0	0	0	0	0	0.281	0	0	0
PCB	0	0	0.13	0	0	0	0	0	0.21	0	0.21	0	0	0	0	0	0	0	0.21
TETRYL	0	0	0	0	0	0	0	0	0	0	0	0	0	0	0	0	0	0	0
RDX	0	0	0	0	0	0	0	0	0	0	0	0	0	0	0	0	0	0	0
TNT	0	0	0	0	0	0	0	0	0	0	0	0	0	0	0	0	0	0	0
ALUMINUM	0	0	0	0	0	0	0	0	0	0	0	0	0	0	0	0	0	0	0
NANO2	0	98.682	98.682	0	0	0	0	0	0	119.947	0	0	0	0	0	21.265	0	0	0
NANO3	0	46.577	46.577	0	0	0	0	0	0	58.501	0	0	0	0	0	11.923	0	0	0
NACHO2	0	110.649	110.649	0	0	0	0	0	0	127.514	0	0	0	0	0	16.865	0	0	0
NAC2H3O2	0	106.277	106.277	0	0	0	0	0	0	132.044	0	0	0	0	0	25.767	0	0	0
GLYCEROL	0.012	7.909	7.909	0	0	0	0	0	0	9.936	0	0	0	0	0	2.028	0	0	0
NAALO2	0	401.199	401.199	0	0	0	0	0	0	401.199	0	0	0	0	0	0	0	0	0
ACETONE	0	0	0	0	0	0	0	0	5.656	0	0	0	0	0	0	0	0	0	0
BENZENE	0	0	0	0	0	0	0	0	2.828	0	0	0	0	0	0	0	0	0	0
1,2 DICHLOROETHANE	0	0	0	0	0	0	0	0	4.47	0	0	0	0	0	0	0	0	0	0
ETHYLBENZENE	0	0	0	0	0	0	0	0	4.47	0	0	0	0	0	0	0	0	0	0
METHYLENE CHLORIDE	0	0	0	0	0	0	0	0	0.003	0	0	0	0	0	0	0	0	0	0
STYRENE	0	0	0	0	0	0	0	0	0.912	0	0	0	0	0	0	0	0	0	0
TOLUENE	0	0	0	0	0	0	0	0	3.831	0	0	0	0	0	0	0	0	0	0
2-BUTANONE	0	0	0	0	0	0	0	0	0.684	0	0	0	0	0	0	0	0	0	0
XYLENE	0	0	0	0	0	0	0	0	0.06	0	0	0	0	0	0	0	0	0	0
CHLOROETHANE	0	0	0	0	0	0	0	0	2.919	0	0	0	0	0	0	0	0	0	0
2-HEXANONE	0	0	0	0	0	0	0	0	0.019	0	0	0	0	0	0	0	0	0	0
CHLOROFORM	0	0	0	0	0	0	0	0	0.006	0	0	0	0	0	0	0	0	0	0
1,2 DICHLOROPROPANE	0	0	0	0	0	0	0	0	0.029	0	0	0	0	0	0	0	0	0	0
VINYL CHLORIDE	0	0	0	0	0	0	0	0	0.648	0	0	0	0	0	0	0	0	0	0
PHENOL	0	0	0	0	0	0	0	0	12.77	0	0	0	0	0	0	0	0	0	0
BENZOIC ACID	0	0	0	0	0	0	0	0	5.108	0	0	0	0	0	0	0	0	0	0
FLUORENE	0	0	0	0	0	0	0	0	0.173	0	0	0	0	0	0	0	0	0	0
HEXACHLOROCYCLOPENTADIENE	0	0	0	0	0	0	0	0	20.068	0	0	0	0	0	0	0	0	0	0
2-METHYLNAPHTHALENE	0	0	0	0	0	0	0	0	0.648	0	0	0	0	0	0	0	0	0	0
2-METHYLPHENOL	0	0	0	0	0	0	0	0	1.004	0	0	0	0	0	0	0	0	0	0
4-METHYLPHENOL	0	0	0	0	0	0	0	0	0.292	0	0	0	0	0	0	0	0	0	0
NAPHTHALENE	0	0	0	0	0	0	0	0	1.004	0	0	0	0	0	0	0	0	0	0
2,4 DIMETHYLPHENOL	0	0	0	0	0	0	0	0	0.164	0	0	0	0	0	0	0	0	0	0
Mass Flow Solids lb/hr																			
STEEL	0	0	42.16	0	0	0	0	0	0	0	198.24	198.24	0	0	0	0	0	0	198.24
FIBERGLASS	0	0	104.03	0	0	0	0	0	0	0	169.67	109.267	0	0	0	0	0	0	169.67
CELLULOSE ACETATE	0	0	0	0	0	0	0	0	0	0	11.45	4.088	0	0	0	0	0	0	11.45
Total Average Flow lb/hr	25143.296	2013.338	1901.327	902.859	502.406	902.859	502.406	600	667.976	2753.36	379.57	311.595	129.179	260.125	260.125	740.021	13	13	379.57
Notes			2								2								2

Stream Number:	54	55	62	63	64	65	66	70	71	72	73	74	75	76	77	78	79	80	81	82	83
Stream Description	C. Water to Secondary Cooling HX, Cooling Conveyor	C. Water from Secondary Cooling HX, Cooling Conveyor	Caustic Feed Dilution Water for RM	Fresh Caustic Feed, 50% NaOH	Make-up Process Water RM EBH	Make-up Process Water WH EBH	Plant steam deamands WH Processing	Chilled Water to Secondary HX Condenser RM	Chilled Water to Secondary HX Condenser WH	Chilled Water RM Secondary HX Condenser RM	Chilled Water FM Secondary HX Condenser WH	Excess Condensate	Total Process Water to RM EBH	Total Process Water to WH EBH	Secondary loop to Condesate Cooler RM	Secondary loop from Condesate Cooler RM	Secondary loop to Condesate Cooler WH	Secondary loop from Condesate Cooler WH	Secondary loop to Cooling Conveyor	Secondary loop From Cooling Conveyor	Deluge Water
Temperature F	45	60	147.4	77	77	77	300	45	45	60	60		147.4	140.2	45	60	45	60	45	60	
Pressure psi	50	50	14.23	14.23	14.23	14.23	66.23	100	100	100	100		14.23	14.23	100	100	100	100	50	50	
Instantaneous Flow gpm (ACFM)																					
Density lb/cuft	63.993	63.776	61.241	93.844	62.251	62.251	0.15	64	64	63.782	63.782		61.241	61.375	64	63.782	64	63.782	63.993	63.776	
Viscosity cP							0.014														
Molecular Weight							18.015														
Enthalpy MMBtu/hr	-16.031	-15.993	-4.596	-9.267	-3.746	-2.717	-2.854	-41.964	-23.351	-41.864	-23.296		-9.807	-6.089	-41.964	-41.864	-23.351	-23.296	-16.031	-15.993	
Mass Flow lb/hr																					
N2	0	0	0	0	0	0	0	0	0	0	0		0	0	0	0	0	0	0	0	
O2	0	0	0	0	0	0	0	0	0	0	0		0	0	0	0	0	0	0	0	
N2O	0	0	0	0	0	0	0	0	0	0	0		0	0	0	0	0	0	0	0	
H2	0	0	0	0	0	0	0	0	0	0	0		0	0	0	0	0	0	0	0	
H2O	1842.732	1842.732	680.408	793.81	548.88	398.104	502.406	4823.711	2684.211	4823.711	2684.211		1451.739	900.51	4823.711	4823.711	2684.211	2684.211	1842.732	1842.732	
PROPYLENE GLYCOL	1228.488	1228.488	0	0	0	0	0	3215.807	1789.474	3215.807	1789.474		0	0	3215.807	3215.807	1789.474	1789.474	1228.488	1228.488	
AMMONIA	0	0	0	0	0	0	0	0	0	0	0		0	0	0	0	0	0	0	0	
NITRODIPHENYLAMINE	0	0	0	0	0	0	0	0	0	0	0		0	0	0	0	0	0	0	0	
NITROSODIPHENYLAMINE	0	0	0	0	0	0	0	0	0	0	0		0	0	0	0	0	0	0	0	
NITROPHENOL	0	0	0	0	0	0	0	0	0	0	0		0	0	0	0	0	0	0	0	
NAOH	0	0	0	793.81	0	0	0	0	0	0	0		0	0	0	0	0	0	0	0	
NITROCELLULOSE	0	0	0	0	0	0	0	0	0	0	0		0	0	0	0	0	0	0	0	
NITROGLYCERIN	0	0	0	0	0	0	0	0	0	0	0		0	0	0	0	0	0	0	0	
TRIACETIN	0	0	0	0	0	0	0	0	0	0	0		0	0	0	0	0	0	0	0	
DIETHYLPHTHALATE	0	0	0	0	0	0	0	0	0	0	0		0	0	0	0	0	0	0	0	
DIMETHYLPHTHALATE	0	0	0	0	0	0	0	0	0	0	0		0	0	0	0	0	0	0	0	
ETHANOL	0	0	0	0	0	0	0	0	0	0	0		0	0	0	0	0	0	0	0	
LEAD STEARATE	0	0	0	0	0	0	0	0	0	0	0		0	0	0	0	0	0	0	0	
SODIUM STEARATE	0	0	0	0	0	0	0	0	0	0	0		0	0	0	0	0	0	0	0	
LEAD OXIDE	0	0	0	0	0	0	0	0	0	0	0		0	0	0	0	0	0	0	0	
PCB	0	0	0	0	0	0	0	0	0	0	0		0	0	0	0	0	0	0	0	
TETRYL	0	0	0	0	0	0	0	0	0	0	0		0	0	0	0	0	0	0	0	
RDX	0	0	0	0	0	0	0	0	0	0	0		0	0	0	0	0	0	0	0	
TNT	0	0	0	0	0	0	0	0	0	0	0		0	0	0	0	0	0	0	0	
ALUMINUM	0	0	0	0	0	0	0	0	0	0	0		0	0	0	0	0	0	0	0	
NANO2	0	0	0	0	0	0	0	0	0	0	0		0	0	0	0	0	0	0	0	
NANO3	0	0	0	0	0	0	0	0	0	0	0		0	0	0	0	0	0	0	0	
NACHO2	0	0	0	0	0	0	0	0	0	0	0		0	0	0	0	0	0	0	0	
NAC2H3O2	0	0	0	0	0	0	0	0	0	0	0		0	0	0	0	0	0	0	0	
GLYCEROL	0	0	0	0	0	0	0	0	0	0	0		0	0	0	0	0	0	0	0	
NAALO2	0	0	0	0	0	0	0	0	0	0	0		0	0	0	0	0	0	0	0	
ACETONE	0	0	0	0	0	0	0	0	0	0	0		0	0	0	0	0	0	0	0	
BENZENE	0	0	0	0	0	0	0	0	0	0	0		0	0	0	0	0	0	0	0	
1,2 DICHLOROETHANE	0	0	0	0	0	0	0	0	0	0	0		0	0	0	0	0	0	0	0	
ETHYLBENZENE	0	0	0	0	0	0	0	0	0	0	0		0	0	0	0	0	0	0	0	
METHYLENE CHLORIDE	0	0	0	0	0	0	0	0	0	0	0		0	0	0	0	0	0	0	0	
STYRENE	0	0	0	0	0	0	0	0	0	0	0		0	0	0	0	0	0	0	0	
TOLUENE	0	0	0	0	0	0	0	0	0	0	0		0	0	0	0	0	0	0	0	
2-BUTANONE	0	0	0	0	0	0	0	0	0	0	0		0	0	0	0	0	0	0	0	
XYLENE	0	0	0	0	0	0	0	0	0	0	0		0	0	0	0	0	0	0	0	
CHLOROETHANE	0	0	0	0	0	0	0	0	0	0	0		0	0	0	0	0	0	0	0	
2-HEXANONE	0	0	0	0	0	0	0	0	0	0	0		0	0	0	0	0	0	0	0	
CHLOROFORM	0	0	0	0	0	0	0	0	0	0	0		0	0	0	0	0	0	0	0	
1,2 DICHLOROPROPANE	0	0	0	0	0	0	0	0	0	0	0		0	0	0	0	0	0	0	0	
VINYL CHLORIDE	0	0	0	0	0	0	0	0	0	0	0		0	0	0	0	0	0	0	0	
PHENOL	0	0	0	0	0	0	0	0	0	0	0		0	0	0	0	0	0	0	0	
BENZOIC ACID	0	0	0	0	0	0	0	0	0	0	0		0	0	0	0	0	0	0	0	
FLUORENE	0	0	0	0	0	0	0	0	0	0	0		0	0	0	0	0	0	0	0	
HEXACHLOROCYCLOPENTADIENE	0	0	0	0	0	0	0	0	0	0	0		0	0	0	0	0	0	0	0	
2-METHYLNAPHTHALENE	0	0	0	0	0	0	0	0	0	0	0		0	0	0	0	0	0	0	0	
2-METHYLPHENOL	0	0	0	0	0	0	0	0	0	0	0		0	0	0	0	0	0	0	0	
4-METHYLPHENOL	0	0	0	0	0	0	0	0	0	0	0		0	0	0	0	0	0	0	0	
NAPHTHALENE	0	0	0	0	0	0	0	0	0	0	0		0	0	0	0	0	0	0	0	
2,4 DIMETHYLPHENOL	0	0	0	0	0	0	0	0	0	0	0		0	0	0	0	0	0	0	0	
Mass Flow Solids lb/hr																					
STEEL	0	0	0	0	0	0	0	0	0	0	0		0	0	0	0	0	0	0	0	
FIBERGLASS	0	0	0	0	0	0	0	0	0	0	0		0	0	0	0	0	0	0	0	
CELLULOSE ACETATE	0	0	0	0	0	0	0	0	0	0	0		0	0	0	0	0	0	0	0	
Total Average Flow lb/hr	3071.22	3071.22	680.408	1587.62	548.88	398.104	502.406	8039.518	4473.685	8039.518	4473.685	0	1451.739	900.51	8039.518	8039.518	4473.685	4473.685	3071.22	3071.22	0
Notes																					

1 - All components in solid phase
2 - PCB in solid phase

Blayne Monen
Issued
2004/07/09

NO.	DATE	DESCRIPTION	DR	CK	DL	PE	APPD
0		ISSUED FOR DESIGN	NL	DG	AS	NW	DJ

QUALITY ☐ LEVEL 1 ☐ LEVEL 2 ☐ LEVEL 3 ☒ ALL

BECHTEL PARSONS BLUE GRASS
A Joint Venture of Bechtel National, INC. and Parsons Infrastructure & Technology Group Inc.

DOD PROGRAM MANAGER FOR ASSEMBLED CHEMICAL WEAPONS ASSESSMENT EDGEWOOD, MARYLAND

US ARMY ENGINEERING AND SUPPORT CENTER, HUNTSVILLE HUNTSVILLE, ALABAMA

GENERAL ATOMICS

BLUE GRASS CHEMICAL AGENT DESTRUCTION PILOT PLANT PROJECT (BGCAPP)
RICHMOND, KENTUCKY

CONTRACT NO. DAAA09-03-D-0023

ENERGETICS BATCH HYDROLIZER PROCESS FLOW DIAGRAM

THIS DRAWING SUPERSEDES DWG NO 24915-07-M5-TCEH-0001

PROFESSIONAL STAMP

DRAWING NUMBER 24915-07-M5-EBH-00001

SHEET 7 OF 9

REV 0

bgcapp_d3.dwg

CASE 6 – EBH M110 H PROJECTILES – RESULTS FOR ONE RM EBH AT AVERAGE THROUGHPUT RATE

Stream Number:	1	2	3	4	5	6	7	8	9	10	11	13	14	15	16	17	18	19	20	21	22	23	26	27	41	42	43	44	46	48	49	51	52	53	54	55	62	63	64	65	66	70	71	72	73	74	75	76	77	78	79	80	81	82	83
Stream Description	Sheared RM Feed	Heated Fresh Caustic Feed 50% NaOH	RM EBH Make-up Water (Wall Wash)	Air Supply RM EBH	Representative Contents Inside RM EBH	Rinse Water RM Solids Discharge	Vent Discharge from RM EBH	Hydrolysate leaving Tank	Discharge from RM EBH	Steam Suppy for RM	Sheared WH Feed	WH EBH Make-up Water (Wall Wash)	Air Supply WH EBH	Representative Contents Inside WH EBH	Rinse Water WH Solids Discharge	Vent Discharge from WH EBH	Energetic Hydrolysate Exiting WH EBH	Discharge from WH EBH	Steam Supply to RM EBH	Steam Supply to WH EBH	Condensate from RM EBH	Condensate from WH EBH	Nitrogen Purge to HDC	HDC Flue Gas	Energetic Hydrolysate to ENR	Insoluble Solids to HDC	HDC Residues at Discharge	Hydrolysate Dilution Water for WH	Steam Supply to Caustic Feed	Condensate Return from Caustic Feed	RM Hydrolysate to ENR	RM Load Chute Rinse Water	WH Load Chute Rinse Water	HDC Residues at Entrance	C. Water to Secondary Cooling HX, Cooling Conveyor	C. Water from Secondary Cooling HX, Cooling Conveyor	Caustic Feed Dilution Water for RM	Fresh Caustic Feed, 50% NaOH	Make-up Process Water RM EBH	Make-up Process Water WH EBH	Plant steam deamands WH Processing	Chilled Water to Secondary HX Condenser RM	Chilled Water to Secondary HX Condenser WH	Chilled Water RM Secondary HX Condenser RM	Chilled Water FM Secondary HX Condenser WH	Excess Condensate	Total Process Water to RM EBH	Total Process Water to WH EBH	Secondary loop to Condesate Cooler RM	Secondary loop from Condesate Cooler RM	Secondary loop to Condesate Cooler WH	Secondary loop from Condesate Cooler WH	Secondary loop to Cooling Conveyor	Secondary loop From Cooling Conveyor	Deluge Water
Temperature F	77	248	190.1	85	248	190.1	185	243	248	300									300		299		77	1100	243				300	299	243	190.1			45	60	190.1	77	77			45		60		190.1	190.1		45	60			45	60	
Pressure psi	14.23	14.23	14.23	14.23	14.23	14.23	14.23	14.23	14.23	66.23									66.23		66.23		14.23	14.23	14.23	14.23	14.23		66.23	66.23	14.23	14.23		14.23	50	50	14.23	14.23	14.23			100		100		14.23	14.23		100	100			50	50	
Instantaneous Flow gpm (ACFM)																																																							
Density lb/cuft		89.87	60.342	0.069	0.053	60.342	0.051	73.258	73.796	0.15									0.15		57.329		0.069	0.024	71.419				0.15	57.329	73.258	60.342			63.993	63.776	60.342	93.844				64		63.782		60.342	60.342		64	63.782			63.993	63.776	
Viscosity cP				0.018	0.013		0.019			0.014									0.014				0.018	0.038					0.014																											
Molecular Weight				28.392	17.981		24.963			18.015									18.015				28.013	28.013					18.015																											
Enthalpy MMBtu/hr	0	-1.149	-3.356	-0.294	-4.661	-0.11	-3.199	-1.836	-1.724	-4.025									-3.837		-4.46		0	0.158	-2.202				-0.188	-0.219	-1.836	-0.121			-1.545	-1.541	-0.581	-1.18	0			-31.4		-31.326		-0.366	-4.535		-31.4	-31.326			-1.545	-1.541	
Mass Flow lb/hr																																																							
N2	0	0	0	1252	0	0	1252	0	0	0									0		0		600	600	0	0	0		0	0	0	0		0	0	0	0	0	0			0		0		0	0		0	0			0	0	
O2	0	0	0	380.5	0	0	380.5	0	0	0									0		0		0	0	0	0	0		0	0	0	0		0	0	0	0	0	0			0		0		0	0		0	0			0	0	
N2O	0	0	0	0	0	0	0	0	0	0									0		0		0	0	0	0	0		0	0	0	0		0	0	0	0	0	0			0		0		0	0		0	0			0	0	
H2	0	0	0	0	0.115	0	0.115	0	0	0									0		0		0	0	0	0	0		0	0	0	0		0	0	0	0	0	0			0		0		0	0		0	0			0	0	
H2O	0	101.04	500	50.5	704.484	16.442	565.655	205.771	189.329	708.7									675.59		675.59		0	0	260.313	0	0		33.11	33.11	205.771	18		0	177.6	177.6	86.606	101.04	0			3609.482		3609.482		54.542	675.59		3609.482	3609.482			177.6	177.6	
PROPYLENE GLYCOL	0	0	0	0	0	0	0	0	0	0									0		0		0	0	0	0	0		0	0	0	0		0	118.4	118.4	0	0	0			2406.322		2406.322			0		2406.322	2406.322			118.4	118.4	
AMMONIA	0	0	0	0	1.189	0	1.186	0.002	0.002	0									0		0		0	0	0.002	0	0		0	0	0.002	0		0	0	0	0	0	0			0		0		0	0		0	0			0	0	
NAOH	0	101.04	0	0	90.77	0	0	90.77	90.77	0									0		0		0	0	90.77	0	0		0	0	90.77	0		0	0	0	0	101.04	0			0		0		0	0		0	0			0	0	
NITROCELLULOSE	0	0	0	0	0	0	0	0	0	0									0		0		0	0	0	0	0		0	0	0	0		0	0	0	0	0	0			0		0		0	0		0	0			0	0	
NITROGLYCERIN	0	0	0	0	0	0	0	0	0	0									0		0		0	0	0	0	0		0	0	0	0		0	0	0	0	0	0			0		0		0	0		0	0			0	0	
TRIACETIN	0	0	0	0	0	0	0	0	0	0									0		0		0	0	0	0	0		0	0	0	0		0	0	0	0	0	0			0		0		0	0		0	0			0	0	
TETRYL	4.91	0	0	0	0	0	0	0	0	0									0		0		0	0	0	0	0		0	0	0	0		0	0	0	0	0	0			0		0		0	0		0	0			0	0	
RDX	0	0	0	0	0	0	0	0	0	0									0		0		0	0	0	0	0		0	0	0	0		0	0	0	0	0	0			0		0		0	0		0	0			0	0	
TNT	2.1	0	0	0	0	0	0	0	0	0									0		0		0	0	0	0	0		0	0	0	0		0	0	0	0	0	0			0		0		0	0		0	0			0	0	
ALUMINUM	1.03	0	0	0	0	0	0	0	0	0									0		0		0	0	0	0	0		0	0	0	0		0	0	0	0	0	0			0		0		0	0		0	0			0	0	
NANO2	0	0	0	2.997	0	0	2.997	2.997	0										0		0		0	0	2.997	0	0		0	0	2.997	0		0	0	0	0	0	0			0		0		0	0		0	0			0	0	
NANO3	0	0	0	0	0	0	0	0	0	0									0		0		0	0	0	0	0		0	0	0	0		0	0	0	0	0	0			0		0		0	0		0	0			0	0	
SODIUM FORMATE	0	0	0	11.284	0	0	11.284	11.284	0										0		0		0	0	11.284	0	0		0	0	11.284	0		0	0	0	0	0	0			0		0		0	0		0	0			0	0	
SODIUM ACETATE	0	0	0	0.758	0	0	0.758	0.758	0										0		0		0	0	0.758	0	0		0	0	0.758	0		0	0	0	0	0	0			0		0		0	0		0	0			0	0	
GLYCEROL	0	0	0	0	0	0	0	0	0	0									0		0		0	0	0	0	0		0	0	0	0		0	0	0	0	0	0			0		0		0	0		0	0			0	0	
NAALO2	0	0	0	3.129	0	0	3.129	3.129	0										0		0		0	0	3.129	0	0		0	0	3.129	0		0	0	0	0	0	0			0		0		0	0		0	0			0	0	
ACETONE	0	0	0	0	0	0	0	0	0	0									0		0		0	0	0	0	0		0	0	0	0		0	0	0	0	0	0			0		0		0	0		0	0			0	0	
BENZENE	0	0	0	0	0	0	0	0	0	0									0		0		0	0	0	0	0		0	0	0	0		0	0	0	0	0	0			0		0		0	0		0	0			0	0	
1,2 DICHLOROETHANE	0	0	0	0	0	0	0	0	0	0									0		0		0	0	0	0	0		0	0	0	0		0	0	0	0	0	0			0		0		0	0		0	0			0	0	
ETHYLBENZENE	0	0	0	0	0	0	0	0	0	0									0		0		0	0	0	0	0		0	0	0	0		0	0	0	0	0	0			0		0		0	0		0	0			0	0	
METHYLENE CHLORIDE	0	0	0	0	0	0	0	0	0	0									0		0		0	0	0	0	0		0	0	0	0		0	0	0	0	0	0			0		0		0	0		0	0			0	0	
STYRENE	0	0	0	0	0	0	0	0	0	0									0		0		0	0	0	0	0		0	0	0	0		0	0	0	0	0	0			0		0		0	0		0	0			0	0	
TOLUENE	0	0	0	0	0	0	0	0	0	0									0		0		0	0	0	0	0		0	0	0	0		0	0	0	0	0	0			0		0		0	0		0	0			0	0	
2-BUTANONE	0	0	0	0	0	0	0	0	0	0									0		0		0	0	0	0	0		0	0	0	0		0	0	0	0	0	0			0		0		0	0		0	0			0	0	
XYLENE	0	0	0	0	0	0	0	0	0	0									0		0		0	0	0	0	0		0	0	0	0		0	0	0	0	0	0			0		0		0	0		0	0			0	0	
CHLOROETHANE	0	0	0	0	0	0	0	0	0	0									0		0		0	0	0	0	0		0	0	0	0		0	0	0	0	0	0			0		0		0	0		0	0			0	0	
2-HEXANONE	0	0	0	0	0	0	0	0	0	0									0		0		0	0	0	0	0		0	0	0	0		0	0	0	0	0	0			0		0		0	0		0	0			0	0	
CHLOROFORM	0	0	0	0	0	0	0	0	0	0									0		0		0	0	0	0	0		0	0	0	0		0	0	0	0	0	0			0		0		0	0		0	0			0	0	
1,2 DICHLOROPROPANE	0	0	0	0	0	0	0	0	0	0									0		0		0	0	0	0	0		0	0	0	0		0	0	0	0	0	0			0		0		0	0		0	0			0	0	
VINYL CHLORIDE	0	0	0	0	0	0	0	0	0	0									0		0		0	0	0	0	0		0	0	0	0		0	0	0	0	0	0			0		0		0	0		0	0			0	0	
PHENOL	0	0	0	0	0	0	0	0	0	0									0		0		0	0	0	0	0		0	0	0	0		0	0	0	0	0	0			0		0		0	0		0	0			0	0	
BENZOIC ACID	0	0	0	0	0	0	0	0	0	0									0		0		0	0	0	0	0		0	0	0	0		0	0	0	0	0	0			0		0		0	0		0	0			0	0	
FLUORENE	0	0	0	0	0	0	0	0	0	0									0		0		0	0	0	0	0		0	0	0	0		0	0	0	0	0	0			0		0		0	0		0	0			0	0	
HEXACHLOROCYCLOPENTADIENE	0	0	0	0	0	0	0	0	0	0									0		0		0	0	0	0	0		0	0	0	0		0	0	0	0	0	0			0		0		0	0		0	0			0	0	
2-METHYLNAPHTHALENE	0	0	0	0	0	0	0	0	0	0									0		0		0	0	0	0	0		0	0	0	0		0	0	0	0	0	0			0		0		0	0		0	0			0	0	
2-METHYLPHENOL	0	0	0	0	0	0	0	0	0	0									0		0		0	0	0	0	0		0	0	0	0		0	0	0	0	0	0			0		0		0	0		0	0			0	0	
4-METHYLPHENOL	0	0	0	0	0	0	0	0	0	0									0		0		0	0	0	0	0		0	0	0	0		0	0	0	0	0	0			0		0		0	0		0	0			0	0	
NAPHTHALENE	0	0	0	0	0	0	0	0	0	0									0		0		0	0	0	0	0		0	0	0	0		0	0	0	0	0	0			0		0		0	0		0	0			0	0	
2,4 DIMETHYLPHENOL	0	0	0	0	0	0	0	0	0	0									0		0		0	0	0	0	0		0	0	0	0		0	0	0	0	0	0			0		0		0	0		0	0			0	0	
Mass Flow Solids lb/hr																																																							
STEEL	37.11	0	0	0	37.11	0	0	0	37.11	0									0		0		0	0	0	37.11	37.11		0	0	0	0		37.11	0	0	0	0	0			0		0		0	0		0	0			0	0	
FIBERGLASS	0	0	0	0	0	0	0	0	0	0									0		0		0	0	0	0	0		0	0	0	0		0	0	0	0	0	0			0		0		0	0		0	0			0	0	
CELLULOSE ACETATE	0	0	0	0	0	0	0	0	0	0									0		0		0	0	0	0	0		0	0	0	0		0	0	0	0	0	0			0		0		0	0		0	0			0	0	
Total Average Flow lb/hr	45.15	202.08	500	1683	851.836	16.442	2199.456	314.711	335.379	708.7	0	0	0	0	0	0	0	0	675.59	0	675.59	0	600	600	369.253	37.11	37.11	0	33.11	33.11	314.711	18	0	37.11	296	296	86.606	202.08	0	0	0	6015.804	0	6015.804	0	54.542	675.59	0	6015.804	6015.804	0	0	296	296	0
Notes	1																																																						

1 - All components in solid phase

Blayne Monen
Issued
2004/07/09

NO.	DATE	DESCRIPTION	DR	CK	DL	PE	APPD
0		ISSUED FOR DESIGN	NL	DG	AS	NW	DJ

QUALITY ☐ LEVEL 1 ☐ LEVEL 2 ☐ LEVEL 3 ☒ ALL

BECHTEL PARSONS BLUE GRASS
A Joint Venture of Bechtel National, INC. and Parsons Infrastructure & Technology Group Inc.

DOD PROGRAM MANAGER FOR ASSEMBLED CHEMICAL WEAPONS ASSESSMENT EDGEWOOD, MARYLAND

US ARMY ENGINEERING AND SUPPORT CENTER, HUNTSVILLE HUNTSVILLE, ALABAMA

GENERAL ATOMICS

BLUE GRASS CHEMICAL AGENT DESTRUCTION PILOT PLANT PROJECT (BGCAPP)
RICHMOND, KENTUCKY

CONTRACT NO. DAAA09–03–D–0023

ENERGETICS BATCH HYDROLIZER PROCESS FLOW DIAGRAM

DRAWING NUMBER 24915–07–M5–EBH–00001 | SHEET 8 OF 9 | REV 0

PROFESSIONAL STAMP

THIS DRAWING SUPERSEDES DWG NO 24915–07–M5–TCEH–0001

bgcapp_d3.dwg

TOTAL SYSTEM FLOWS

Table 4, Make up water mass flowrate, peak

	Total for two operating trains		Total for one operating train
	Case 1 M55 VX Rockets (lb/hr)	Case 2 M55 GB Rockets (lb/hr)	Case 3 M110 H Projectiles (lb/hr)
	14,624	11,927	26

Table 5, Make up water mass flowrate,

	Total for two operating trains		Total for one operating train
	Case 4 M55 VX Rockets (lb/hr)	Case 5 M55 GB Rockets (lb/hr)	Case 6 M110 H Projectiles (lb/hr)
	6,113	4,886	0

Table 6 Energetic hydrolysate component mass flow rates, peak

Liquid	Total for two operating trains		Total for one operating train
	Case 1 M55 VX Rockets (lb/hr)	Case 2 M55 GB Rockets (lb/hr)	Case 3 M110 H Projectiles (lb/hr)
N2O	0.08	0.06	0.00
H2O	5,777	4,841	312
AMMONIA	0.22	0.17	0.01
NITRODIPHENYLAMINE	4	3	0
NITROSODIPHENYLAMINE	2	2	0
NITROPHENOL	12	10	0
NAOH	1,397	1,165	138
DIETHYLPHTHALATE	7	6	0
DIMETHYLPHTHALATE	15	12	0
ETHANOL	0.15	0.11	0.00
SODIUM STEARATE	15	12	0
LEAD OXIDE	5	4	0
PCB	0.00	0.00	0.00
NANO2	465	387	5
NANO3	227	189	0
NACHO2	494	411	17
NAC2H3O2	512	426	1
GLYCEROL	39	32	0
NAALO2	1,553	1,294	5
Total	**10,523**	**8,796**	**478**

Table 7 Energetic hydrolysate component mass flow rates, average

Liquid	Total for two operating trains		Total for one operating train
	Case 4 M55 VX Rockets (lb/hr)	Case 5 M55 GB Rockets (lb/hr)	Case 6 M110 H Projectiles (lb/hr)
N2O	0.04	0.03	0.00
H2O	3,645	3,055	260
AMMONIA	0.12	0.10	0.00
NITRODIPHENYLAMINE	2	2	0
NITROSODIPHENYLAMINE	1	1	0
NITROPHENOL	8	6	0
NAOH	868	722	91
DIETHYLPHTHALATE	4	4	0
DIMETHYLPHTHALATE	9	8	0
ETHANOL	0.07	0.05	0.00
SODIUM STEARATE	9	8	0
LEAD OXIDE	3	3	0
PCB	0.00	0.00	0.00
NANO2	288	240	3
NANO3	141	117	0
NACHO2	306	255	11
NAC2H3O2	317	264	1
GLYCEROL	24	20	0
NAALO2	964	802	3
Total	**6,591**	**5,507**	**369**

Table 8, Vent gas composition for case 1, two trains operating

Gases	EBH Vent Gas (lb/hr)	HDC Vent Gas (lb/hr)	Total Vent Gas to Treatment (lb/hr)
N2	154,560	1,200	155,760
O2	46,975	0	46,975
N2O	27	0	27
H2	57	0	57
H2O	21,132	0	21,132
AMMONIA	59	0	59
NITRODIPHENYLAMINE	0.03	0	0.03
NITROSODIPHENYLAMINE	0.00	0	0.00
NITROPHENOL	0.08	0	0.08
NITROCELLULOSE	0	0	0
NITROGLYCERIN	1.10	0	1.10
TRIACETIN	0.83	0	0.83
DIETHYLPHTHALATE	0.18	0	0.18
DIMETHYLPHTHALATE	0.48	0	0.48
ETHANOL	18	0	18
PCB	0	0.82	0.82
GLYCEROL	0.20	0	0.20
PYROLYSIS GASES	0	262	262
Total	**222,831**	**1,463**	**224,294**

Table 9, Vent gas composition for case 4, two trains operating

Gases	EBH Vent Gas (lb/hr)	HDC Vent Gas (lb/hr)	Total Vent Gas to Treatment (lb/hr)
N2	101,655	1,200	102,855
O2	30,896	0	30,896
N2O	17	0	17
H2	36	0	36
H2O	16,275	0	16,275
AMMONIA	37	0	37
NITRODIPHENYLAMINE	0.03	0	0.03
NITROSODIPHENYLAMINE	0.00	0	0.00
NITROPHENOL	0.07	0	0.07
NITROCELLULOSE	0	0	0
NITROGLYCERIN	1.51	0	1.51
TRIACETIN	1.13	0	1.13
DIETHYLPHTHALATE	0.17	0	0.17
DIMETHYLPHTHALATE	0.38	0	0.38
ETHANOL	12	0	12
PCB	0	0.52	0.52
GLYCEROL	0.16	0	0.16
PYROLYSIS GASES	0	163	163
Total	**148,930**	**1,363**	**150,294**

Table 10, Vent gas composition for case 2, two trains operating

Gases	EBH Vent Gas (lb/hr)	HDC Vent Gas (lb/hr)	Total Vent Gas to Treatment (lb/hr)
N2	131,304	1,200	132,504
O2	39,907	0	39,907
N2O	22	0	22
H2	48	0	48
H2O	18,991	0	18,991
AMMONIA	49	0	49
NITRODIPHENYLAMINE	0.03	0	0
NITROSODIPHENYLAMINE	0.00	0	0
NITROPHENOL	0.08	0	0
NITROCELLULOSE	0	0	0
NITROGLYCERIN	1.28	0	1
TRIACETIN	0.96	0	1
DIETHYLPHTHALATE	0.18	0	0
DIMETHYLPHTHALATE	0.44	0	0
ETHANOL	16	0	16
PCB	0	0.68	0.68
GLYCEROL	0.19	0	0.19
PYROLYSIS GASES	0	219	219
Total	**190,339**	**1,419**	**191,758**

Table 11, Vent gas composition for case 5, two trains operating

Gases	EBH Vent Gas (lb/hr)	HDC Vent Gas (lb/hr)	Total Vent Gas to Treatment (lb/hr)
N2	87,117	1,200	88,317
O2	26,477	0	26,477
N2O	14	0	14
H2	30	0	30
H2O	14,941	0	14,941
AMMONIA	31	0	31
NITRODIPHENYLAMINE	0.03	0	0.03
NITROSODIPHENYLAMINE	0.00	0	0.00
NITROPHENOL	0.06	0	0.06
NITROCELLULOSE	0	0	0.00
NITROGLYCERIN	1.62	0	1.62
TRIACETIN	1.20	0	1.20
DIETHYLPHTHALATE	0.18	0	0.18
DIMETHYLPHTHALATE	0.36	0	0.36
ETHANOL	10	0	10
PCB	0	0.42	0.42
GLYCEROL	0.14	0	0.14
PYROLYSIS GASES	0	136	136
Total	**128,624**	**1,336**	**129,960**

Table 12, Vent gas composition for case 3, one train operating

Gases	EBH Vent Gas (lb/hr)	HDC Vent Gas (lb/hr)	Total Vent Gas to Treatment (lb/hr)
N2	2,504	600	3,104
O2	761	0	761
N2O	0	0	0
H2	0.18	0	0.18
H2O	1,148	0	1,148
AMMONIA	4	0	4
PYROLYSIS GASES	0	0	0
Total	**4,416**	**600**	**5,016**

Table 13, Vent gas composition for case 6, one train operating

Gases	EBH Vent Gas (lb/hr)	HDC Vent Gas (lb/hr)	Total Vent Gas to Treatment (lb/hr)
N2	2,504	600	3,104
O2	761	0	761
N2O	0	0	0
H2	0.12	0	0.12
H2O	1,131	0	1,131
AMMONIA	2	0	2
PYROLYSIS GASES	0	0	0
Total	**4,399**	**600**	**4,999**

Table 14, Pyrolysis gas composition for cases 1 and 2 (peak) and 4 and 5 (average), two trains operating

Compound	Case 1 M55 VX Rockets (lb/hr)	Case 2 M55 GB Rockets (lb/hr)	Case 4 M55 VX Rockets (lb/hr)	Case 5 M55 GB Rockets (lb/hr)
ACETONE	21.9	18.2	13.6	11.3
BENZENE	10.9	9.1	6.8	5.7
1,2 DICHLOROETHANE	17.3	14.4	10.7	8.9
ETHLYBENZENE	17.3	14.4	10.7	8.9
METHYLENE CHLORIDE	0.0	0.0	0.0	0.0
STYRENE	3.5	2.9	2.2	1.8
TOLUENE	14.8	12.4	9.2	7.7
2-BUTANONE	2.7	2.2	1.6	1.4
XYLENE	0.2	0.2	0.1	0.1
CHLOROETHANE	11.3	9.4	7.0	5.8
2-HEXANONE	0.1	0.1	0.0	0.0
CHLOROFORM	0.0	0.0	0.0	0.0
1,2 DICHLOROPROPANE	0.1	0.1	0.1	0.1
VINYL CHLORIDE	2.5	2.1	1.6	1.3
PHENOL	49.4	41.2	30.7	25.5
BENZOIC ACID	19.8	16.5	12.3	10.2
FLUORENE	0.7	0.6	0.4	0.3
HCCPD	77.7	64.7	48.2	40.1
2-METHYLNAPHTHALENE	2.5	2.1	1.6	1.3
2-METHYLPHENOL	3.9	3.2	2.4	2.0
4-METHYLPHENOL	1.1	0.9	0.7	0.6
NAPHTHALENE	3.9	3.2	2.4	2.0
2,4 DIMETHYLPHENOL	0.6	0.5	0.4	0.3
Total	**262.3**	**218.6**	**162.8**	**135.5**

Table 15, Chilled Solution flow rate (2 trains operating for case 1, 2, 4, & 5 and 1 train operating for case 3 & 6)

	EBH Cooling	HDC Cooling	Total Cooling
VX Case 1	104,546	11,888	116,434
GB Case 2	99,847	9,907	109,754
H Case 3	11,948	450	12,398
VX Case 4	68,337	7,381	75,718
GB Case 5	66,132	6,142	72,274
H Case 6	12,032	296	12,328

Blayne Monen
Issued
2004/07/09

NO.	DATE	DESCRIPTION	DR	CK	DL	PE	APPD
0		ISSUED FOR DESIGN	NL	DG	AS	NW	DJ

QUALITY ☐ LEVEL 1 ☐ LEVEL 2 ☐ LEVEL 3 ☒ ALL

BECHTEL PARSONS BLUE GRASS
A Joint Venture of Bechtel National, INC. and Parsons Infrastructure & Technology Group Inc.

DOD PROGRAM MANAGER FOR ASSEMBLED CHEMICAL WEAPONS ASSESSMENT EDGEWOOD, MARYLAND

US ARMY ENGINEERING AND SUPPORT CENTER, HUNTSVILLE HUNTSVILLE, ALABAMA

GENERAL ATOMICS

BLUE GRASS CHEMICAL AGENT DESTRUCTION PILOT PLANT PROJECT (BGCAPP)
RICHMOND, KENTUCKY

CONTRACT NO. DAAA09-03-D-0023

ENERGETICS BATCH HYDROLIZER PROCESS FLOW DIAGRAM

DRAWING NUMBER 24915-07-M5-EBH-00001 | SHEET 9 OF 9 | REV 0

THIS DRAWING SUPERSEDES DWG NO 24915-07-M5-TCEH-0001

PROFESSIONAL STAMP

bgcapp_d3.dwg

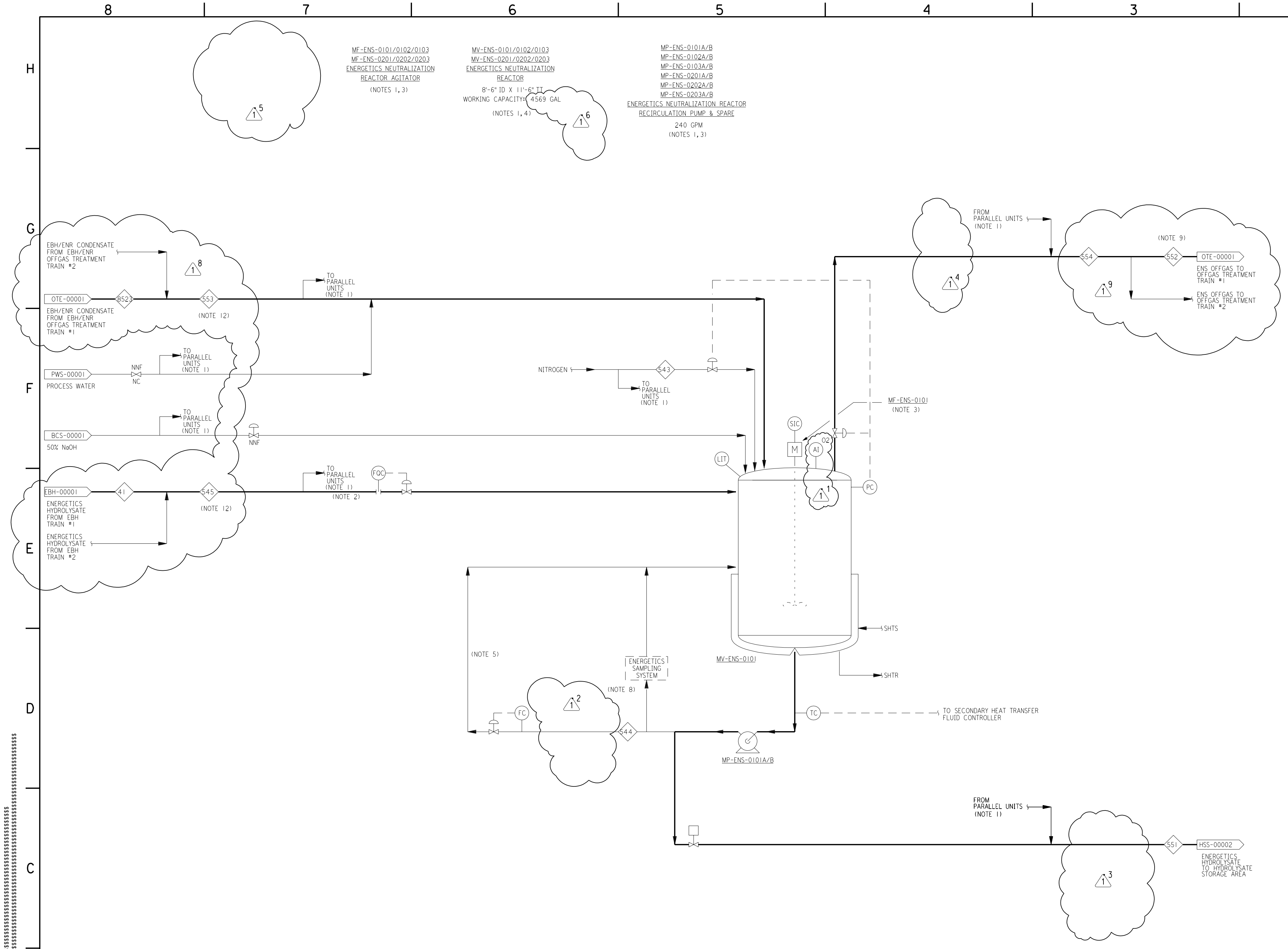

NOTES:

1. THERE ARE A TOTAL OF SIX ENERGETICS NEUTRALIZATION REACTORS AND ANCILLARY EQUIPMENT. ONLY ONE ENR IS FILLING AT A TIME OR ONLY ONE ENR IS DRAINING AT A TIME.
2. DO NOT POCKET.
3. VARIABLE SPEED MOTOR.
4. CROSS CONNECT REACTORS TO TRANSFER CONTENTS.
5. REACTOR CIRCULATION LOOP TO BE DRAINED AND FLUSHED UPON COMPLETION OF A BATCH CYCLE. ENERGETICS HYDROLYSATE IS NOT TO BE BLOCKED IN PIPED SECTIONS.
6. DELETED
7. FOR SYMBOL DEFINITION SEE DRAWING 24915-00-M5-00-00002.
8. SAMPLING SYSTEM IS LOCATED IN THE GLOVE BOX. LOCAL SAMPLE CONNECTION IS ALSO PROVIDED TO BE USED AS AND IF REQUIRED.
9. FOR MASS BALANCE PURPOSES, IT HAS BEEN ASSUMED ONLY ONE ENR WILL BE VENTING TO EACH OTE SYSTEM.
10. BATCH SEQUENCING:

2.5 HOURS	LOADING INCLUDING HEATING TO 220°F EBH ENERGETIC HYDROLYSATE AND OTE CONDENSATE
1.0 HOURS	MIXING WHILE MAINTAINING AT 220°F
6.0 HOURS	SAMPLING AND TESTING WHILE MAINTAINING AT 220°F
2.0 HOURS	COOLING TO 110°F.
0.5 HOURS	DRAINING
3.0 HOURS	STANDBY OR REACTION IF REQUIRED

11. DELETED
12. BOTH EBH TRAINS AND OTE TRAINS SEND ENERGETICS HYDROLYSATE AND CONDENSATE, RESPECTIVELY, TO ONE ENR AT A TIME.

THIS DRAWING SUPERSEDES DRAWING 24915-07-M5-TNE-00001

NO.	DATE	DESCRIPTION	DR	CK	DL	PE	APPD
1	11-3-04	ISSUED FOR DESIGN (IFD)	GO	WW	SH	JB	JU
0	7-2-04	ISSUED FOR DESIGN (IFD)	WW	NI	SH	JB	JU

QUALITY ☐ LEVEL 1 ☒ LEVEL 2 ☐ LEVEL 3 ☐ ALL

BECHTEL PARSONS BLUE GRASS
A Joint Venture of Bechtel National, INC. and Parsons Infrastructure & Technology Group Inc.

DOD PROGRAM MANAGER FOR ASSEMBLED CHEMICAL WEAPONS ASSESSMENT EDGEWOOD, MARYLAND

US ARMY ENGINEERING AND SUPPORT CENTER, HUNTSVILLE HUNTSVILLE, ALABAMA

BLUE GRASS CHEMICAL AGENT DESTRUCTION PILOT PLANT PROJECT (BGCAPP)
RICHMOND, KENTUCKY

CONTRACT NO. DAAA09-03-D-0023

MUNITIONS DEMILITARIZATION BUILDING ENERGETICS NEUTRALIZATION PROCESS FLOW DIAGRAM

PROFESSIONAL STAMP

DRAWING NUMBER 24915-07-M5-ENS-00001 | SHEET 1 OF 4 | REV 1

07-M5-ENS-1-1.PFZ BGCAPP_E2.BDR

DESIGN FILE: DGNSPEC$$
PLOTTED BY: USER$ ON DATE$$$$$$$ AT SYTIME USING COLOR$$

S:\2D\pr\07-M5-ENS-1-1.pfz 11/04/2004 04:29:51 PM

MATERIAL BALANCE TABLE FOR PFD: 24915-07-M5-ENS-00001
ENERGETICS NEUTRALIZATION REACTOR
CASE: AGENT GB CO-PROCESSING PEAK THROUGHPUT

STREAM NUMBER	41	543	544	545	551	552	553	554	8523
Description	Energetic Hydrolysate To ENR From one EBH Train	N2 Sweep To ENR	ENR Recirculation Pump Discharge	Energetic Hydrolysate To ENR From Both EBH Trains	Total ENR Energetic Hydrolysate To Storage Tanks	ENR Off Gas To One EBH Offgas Treatment Train	OTE Condensate Return From Both EBH Off Gas Treatment Trains	ENR Off Gas To Both EBH Offgas Treatment Trains	OTE Condensate Return From One EBH Off Gas Train
Temperature, oF	236	77	220	236	110	220	106	220	106
Pressure, PSIA	94.23	30	80	94.23	80	30	85	30	85
Instantaneous Volume Flow, GPM (ACFM)	39.6	(139.7)	209.5	39.6	139.7	(2.9)	8.8	(5.9)	4.4
Density, LB/FT^3	66.68	0.146	67.021	66.68	80.2	0.095	62.66	0.095	62.66
Viscosity, CP	2.61	0.018	3.71	2.61	48.56	0.018	0.01	0.018	0.01
MW		28.013				22.867		22.867	
Enthalpy, MMBTU/HR	-29.279		-43.608	-29.279	-44.236	-0.073	-14.613	-0.073	-14.613
Component Flows, LB/HR									
TNT	0.002			0.004					
TETRYL									
RDX	0.001			0.002			0.186		0.093
TRIACETIN							1.012		0.506
NITROCELLULOSE	0.880			1.760			0.004		0.002
NITROGLYCERIN	0.009			0.018			1.388		0.694
NITRODIPHENYLAMINE	0.034		0.616	0.068	0.082	1.413E-08	1.400E-02	0.000	0.007
NITROSODIPHENYLAMINE	1.210		18.214	2.420	2.426	1.677E-07	6.000E-03	0.000	0.003
NITROPHENOL	7.211		108.611	14.422	14.466	4.474E-06	4.400E-02	0.000	0.022
DIETHYLPHTHALATE	2.976		45.664	5.952	6.082	4.233E-06	1.300E-01	0.000	0.065
DIMETHYLPHTHALATE	6.015		91.822	12.030	12.230	2.060E-05	2.000E-01	0.000	0.100
ETHANOL	0.016		4.573	0.032	0.609	0.002	0.580	0.003	0.290
LEAD STEARATE									
SODIUM STEARATE	6.112		91.778	12.224	12.224				
LEAD OXIDE	2.225		33.411	4.450	4.450				
O2			0.045		0.006	0.007	0.018	0.014	0.009
N2		44.822	55.905		7.446	18.707	0.036	37.414	0.018
H2			1.700E-09		2.264E-10	9.706E-06	1.941E-05	1.941E-05	9.706E-06
CO2			0.048		0.006	0.004	0.014	0.007	0.007
CO			9.725E-05		1.295E-05	3.051E-05	7.396E-05	6.101E-05	3.698E-05
NH3	0.137		5.757	0.274	0.767	0.009	0.000	1.708E-02	2.151E-05
N2O	0.050		0.713	0.100	0.095	0.006	0.007	0.012	0.004
NO						3.493E-08	7.012E-08	6.986E-08	3.506E-08
NO2			2.273E-04		3.027E-05	6.786E-07	3.163E-05	1.357E-06	1.582E-05
H2O	3301.609		81405.798	6603.218	10842.541	12.823	4264.386	25.645	2132.193
NAOH	583.964		8735.691	1167.928	1163.518				
HCL			1.095		0.146				0.073
H2SO4									
HCLO			0.003		4.058E-04		0.000		2.029E-04
HNO3									
NA2SO4									
NANO2	194.398		2919.062	388.796	388.794	0.001		0.002	0.001
NANO3	91.856		1386.696	183.712	184.696	0.001		0.003	0.001
NACL									0.001
NACLO			0.003		4.058E-04		0.000		2.029E-04
NH4CL(S)			578.222		77.014		77.066		38.507
AL(OH)3									
SODIUM FORMATE	205.043		3129.304	410.086	416.796				
SODIUM ACETATE	211.928		3182.311	423.856	423.856				
GLYCEROL	15.870		238.950	31.740	31.826	9.539E-06	8.601E-02	0.000	0.043
NAALO2	647.096		9716.794	1294.192	1294.192				
METHANE			1.013E-04		1.349E-05	3.075E-06	1.964E-05	6.150E-06	9.819E-06
ETHYLENE			4.942E-04		6.583E-05	3.508E-06	7.284E-05	7.016E-06	3.642E-05
PROPYLENE			0.001		1.735E-04	4.772E-06	1.830E-04	9.543E-06	9.151E-05
ACETONE			0.009		0.001	4.655E-06	1.177E-03	0.000	0.001
BENZENE			0.009		0.001	2.363E-06	1.169E-03	0.000	0.001
1,2-DICHLOROETHANE			0.027		0.004	6.796E-06	3.569E-03	0.000	0.002
ETHYLBENZENE	0.450		6.814	0.900	0.908	3.786E-04	8.319E-03	0.001	0.004
METHYLENE CHLORIDE									
STYRENE	8.030		120.593	16.060	16.062	0.005	0.012	0.010	0.006
TOLUENE			0.036		0.005	4.141E-06	4.747E-03	0.000	0.002
2-BUTANONE			0.002		3.000E-04	6.304E-07	3.013E-04	1.261E-06	1.506E-04
XYLENE			0.002		2.666E-04	1.004E-07	2.668E-04	2.007E-07	1.334E-04
CHLOROETHANE			0.001		1.559E-04	1.730E-06	1.594E-04	3.460E-06	7.969E-05
2-HEXANONE			3.845E-04		5.121E-05	2.688E-08	5.127E-05	5.376E-08	2.563E-05
CHLOROFORM									
1,2-DICHLOROPROPANE			3.720E-04		4.955E-05	6.477E-08	4.968E-05	1.295E-07	2.484E-05
VINYL CHLORIDE			1.816E-04		2.419E-05	4.443E-07	2.508E-05	8.887E-07	1.254E-05
PHENOL	0.450		11.161	0.900	1.487	1.131E-04	5.868E-01	0.000	0.293
BENZOIC ACID	0.106		8.151	0.212	1.086	4.110E-06	8.737E-01	0.000	0.437
FLUORENE			0.116		0.015	2.678E-08	1.544E-02	0.000	0.008
HEXACHLOROCYCLOPENTADIENE			63.739		8.490	1.279E-04	8.490E+00	0.000	4.245
2-METHYLNAPHTHALENE			0.051		0.007	1.007E-07	6.808E-03	0.000	0.003
2-METHYLPHENOL			0.175		0.023	5.324E-06	2.329E-02	0.000	0.012
4-METHYLPHENOL			0.053		0.007	2.554E-07	7.043E-03	0.000	0.004
NAPHTHALENE			0.999		0.133	4.381E-06	1.330E-01	0.000	0.067
2,4-DIMETHYLPHENOL			0.020		0.003	7.086E-08	2.637E-03	0.000	0.001
BIS(2-CHLOROETHYL)ETHER			0.861		0.115	1.149E-05	1.148E-01	0.000	0.057
METHYLCHLORIDE			0.005		6.438E-04	1.651E-05	6.768E-04	3.303E-05	3.384E-04
ETHYLPHENOL			76.111		10.137	3.235E-04	1.014E+01	0.001	5.069
ISOPROPYLPHENOL			31.120		4.145	3.437E-04	4.146E+00	0.001	2.073
ISOPROPYENYLPHENOL			63.169		8.414	0.001	8.415	0.001	4.207
BISPHENOL A			250.563		33.373	2.429E-08	3.337E+01	0.000	16.686
CYCLOPENTADIENE			0.008		0.001	5.288E-06	1.012E-03	0.000	0.001
METHYLCYCLOPENTADIENE			0.511		0.068	1.681E-04	6.836E-02	0.000	0.034
PROPIONALDEHYDE			0.001		1.721E-04	8.579E-07	1.738E-04	1.716E-06	8.688E-05
ACROLEIN			0.001		1.997E-04	8.871E-07	2.014E-04	1.774E-06	1.007E-04
METHYLACETYLENE			0.003		4.233E-04	1.067E-05	4.447E-04	2.135E-05	2.223E-04
ACETALDEHYDE			0.148		0.020	2.051E-04	2.014E-02	0.000	0.010
ACETIC ACID			1.498		0.200	1.351E-04	1.998E-01	0.000	0.100
FURAN			0.050		0.007	4.889E-05	6.747E-03	0.000	0.003
METHYLFURFURAL			42.029		5.598	4.210E-06	5.598E+00	0.000	2.799
BENZENE DIOL			6.860		0.914	6.547E-06	9.138E-01	0.000	0.457
BENZENE DIOL DIACETATE			0.904		0.120	3.516E-05	1.205E-01	0.000	0.060
BENZENE TRIOL TRIACETATE			19.429		2.588	3.379E-07	2.588E+00	0.000	1.294
CYCLOPENTENONE			0.210		0.028	1.141E-05	2.803E-02	0.000	0.014
PENTENYNE			0.001		1.187E-04	5.937E-07	1.198E-04	1.187E-06	5.992E-05
BUTADIENE			0.001		8.717E-05	1.288E-06	8.975E-05	2.576E-06	4.488E-05
4-NITROPHENOL	0.627		9.415	1.254	1.254	3.878E-07	7.752E-07	7.756E-07	3.876E-07
BUTYLBENZYLPHTHALATE	0.008		0.120	0.016	0.016				
BIS(2-ETHYLHEXYL)PHTHALATE	0.021		0.315	0.042	0.042				
4-METHYL-3-HEXANOL	0.128		1.922	0.256	0.256	2.947E-05	5.614E-05	5.893E-05	2.807E-05
PHENAZINE	0.136		2.042	0.272	0.272	2.374E-08	4.744E-08	4.748E-08	2.372E-08
TETRADECANOIC ACID	0.106		1.592	0.212	0.212	1.143E-08	2.284E-08	2.286E-08	1.142E-08
1-PHENYL-1H-BENZOTRIAZOLE	0.264		3.964	0.528	0.528	2.637E-08	5.271E-08	5.275E-08	2.636E-08
9-ACRIDINAMINE	0.172		2.583	0.344	0.344	3.466E-09	7.199E-09	6.933E-09	3.599E-09
4,6-DIMETHOXY-2(2H)-BENZOFURANONE	0.172		2.583	0.344	0.344	6.306E-08	1.260E-07	1.261E-07	6.302E-08
BENZALDEHYDE, (PHENYLMETHYLENE)HYDRAZONE	0.188		2.823	0.376	0.376	6.848E-09	1.369E-08	1.370E-08	6.846E-09
HEXADECANOIC ACID	1.136		17.058	2.272	2.272	3.271E-08	6.538E-08	6.542E-08	3.269E-08
OCTADECANOIC ACID	3.780		56.760	7.560	7.560	2.665E-08	5.328E-08	5.331E-08	2.664E-08
THIIRANE	0.783		11.669	1.566	1.554	0.006	0.001	1.254E-02	3.589E-04
1-BUTANOL	0.783		11.752	1.566	1.565	0.001	0.001	0.002	0.001
1-METHYLETHYL-BENZENE	0.372		5.586	0.744	0.744	1.430E-04	2.333E-04	2.861E-04	1.167E-04
DECANE	0.392		5.886	0.784	0.784	9.548E-05	1.705E-04	1.910E-04	8.526E-05
UNDECANE	0.274		4.114	0.548	0.548	3.164E-05	6.054E-05	6.328E-05	3.027E-05
ANILINE	0.274		4.114	0.548	0.548	4.254E-05	8.006E-05	8.507E-05	4.003E-05
2-ETHYL-1-HEXANOL	0.196		2.943	0.392	0.392	2.006E-05	3.909E-05	4.012E-05	1.954E-05
PCB			5.105		0.680	3.904E-09	6.800E-01	0.000	0.340
TOTAL PEAK THROUGHPUT, LB/HR	5297.5	44.8	112608.9	10595.0	14998.5	31.6	4421.8	63.1	2210.9
TOTAL AVERAGE THROUGHPUT, LB/HR	3114.9	44.8	87266.0	6229.9	11623.1	33.7	5415.7	67.4	5415.7

THIS DRAWING SUPERSEDES DRAWING 24915-07-M5-TNE-00001

NO.	DATE	DESCRIPTION	DR	CK	DL	PE	APPD
1	11-3-04	ISSUED FOR DESIGN (IFD)	GO	WW	SH	JB	JU
0	7-2-04	ISSUED FOR DESIGN (IFD)	WW	NI	SH	JB	JU

QUALITY ☐ LEVEL 1 ☒ LEVEL 2 ☐ LEVEL 3 ☐ ALL

BECHTEL PARSONS BLUE GRASS
A Joint Venture of Bechtel National, INC. and Parsons Infrastructure & Technology Group Inc.

DOD PROGRAM MANAGER FOR ASSEMBLED CHEMICAL WEAPONS ASSESSMENT EDGEWOOD, MARYLAND

US ARMY ENGINEERING AND SUPPORT CENTER, HUNTSVILLE HUNTSVILLE, ALABAMA

BLUE GRASS CHEMICAL AGENT DESTRUCTION PILOT PLANT PROJECT (BGCAPP)
RICHMOND, KENTUCKY

CONTRACT NO. DAAA09-03-D-0023

MUNITIONS DEMILITARIZATION BUILDING ENERGETICS NEUTRALIZATION PROCESS FLOW DIAGRAM

DRAWING NUMBER 24915-07-M5-ENS-00001 | SHEET 2 OF 4 | REV 1

PROFESSIONAL STAMP

07-M5-ENS-1-2.PFZ

BGCAPP_E2.BDR

DESIGN FILE: DGNSPEC
PLOTTED BY: USER$ ON DATE$ AT SYTIME USING COLOR

S:\2D\pr\07-M5-ENS-1-2.pfz 11/04/2004 04:31:36 PM

MATERIAL BALANCE TABLE FOR PFD: 24915-07-M5-ENS-00001
ENERGETICS NEUTRALIZATION REACTOR
CASE: AGENT VX CO-PROCESSING PEAK THROUGHPUT

STREAM NUMBER	41	543	544	545	551	552	553	554	8523
Description	Energetic Hydrolysate To ENR From one EBH Train	N2 Sweep To ENR	ENR Recirculation Pump Discharge	Energetic Hydrolysate To ENR From Both EBH Trains	Total ENR Energetic Hydrolysate To Storage Tanks	ENR Off Gas To One EBH Offgas Treatment Train	OTE Condensate Return From Both EBH Off Gas Treatment Trains	ENR Off Gas To Both EBH Offgas Treatment Trains	OTE Condensate Return From One EBH Off Gas Train
Temperature, oF	236	77	220	236	110	220	110	220	110
Pressure, PSIA	94.23	30	80	94.23	80	30	85	30	85
Instantaneous Volume Flow, GPM (ACFM)	46.1	(152.3)	228.4	46.1	152.3	(3.4)	8.0	(6.7)	4.0
Density, LB/FT^3	66.68	0.8	67.021	66.68	80.2	0.095	62.88	0.095	62.88
Viscosity, CP	2.61	0.018	3.71	2.61	48.56	0.018	0.01	0.018	0.01
MW		28.013				22.947		22.947	
Enthalpy, MMBTU/HR	-33.884		-46.841	-33.884	-47.505	-0.069	-13.202	-0.069	-13.202
Component Flows, LB/HR									
TNT	0.003			0.006					
TETRYL									
RDX	0.001			0.002			0.222		0.111
TRIACETIN							1.052		0.526
NITROCELLULOSE	1.056			2.112			0.004		0.002
NITROGLYCERIN	0.011			0.022			1.442		0.721
NITRODIPHENYLAMINE	0.042		0.736	0.084	0.098	1.542E-08	0.014	3.083E-08	0.007
NITROSODIPHENYLAMINE	1.454		21.878	2.908	2.914	1.838E-07	0.006	3.677E-07	0.003
NITROPHENOL	8.624		129.873	17.248	17.298	4.883E-06	0.050	9.766E-06	0.025
DIETHYLPHTHALATE	3.572		54.673	7.144	7.282	4.625E-06	0.138	9.251E-06	0.069
DIMETHYLPHTHALATE	7.225		110.187	14.450	14.676	2.257E-05	0.226	4.513E-05	0.113
ETHANOL	0.021		3.983	0.042	0.531	0.001	0.491	0.003	0.246
LEAD STEARATE									
SODIUM STEARATE	7.331		110.082	14.662	14.662				
LEAD OXIDE	2.669		40.078	5.338	5.338				
O2			0.045		0.006	0.005	0.016	0.010	0.008
N2		44.822	60.259		8.026	18.414	0.032	36.828	0.016
H2			1.833E-09		0.000	9.560E-06	1.912E-05	1.912E-05	9.561E-06
CO2			0.041		0.005	0.003	0.011	0.006	0.006
CO			1.643E-04		0.000	4.707E-05	1.160E-04	9.413E-05	5.801E-05
NH3	0.156		6.443	0.312	0.858	0.009	4.540E-05	0.017	2.270E-05
N2O	0.057		0.808	0.114	0.108	0.006	0.006	0.013	0.003
NO						2.801E-08	5.626E-08	5.603E-08	2.813E-08
NO2			1.680E-04		0.000	4.581E-07	2.330E-05	9.161E-07	1.165E-05
H2O	3774.225		85353.091	7548.450	11368.286	12.230	3843.662	24.460	1921.831
NAOH	700.628		10483.826	1401.256	1396.354				
HCL			1.095		0.146		0.146		0.073
H2SO4									
HCLO									
HNO3									
NA2SO4									
NANO2	233.343		3503.863	466.686	466.684	0.001	0.003	0.002	0.001
NANO3	110.268		1664.569	220.536	221.706	0.002	0.003	0.004	0.002
NACL							0.002		0.001
NACLO			0.003		0.000		4.342E-04		2.171E-04
NH4CL(S)			692.260		92.203		92.203		46.101
AL(OH)3									
SODIUM FORMATE	246.082		3750.696	492.164	499.560				
SODIUM ACETATE	254.451		3820.836	508.902	508.902				
GLYCEROL	19.086		287.316	38.172	38.268	1.047E-05	0.096	2.094E-05	0.048
NAALO2	776.514		11660.134	1553.028	1553.028				
METHANE			1.718E-04		0.000	4.765E-06	3.242E-05	9.531E-06	1.621E-05
ETHYLENE			0.001		0.000	5.360E-06	1.209E-04	1.072E-05	6.044E-05
PROPYLENE			0.002		0.000	6.846E-06	2.863E-04	1.369E-05	1.432E-04
ACETONE			0.013		0.002	6.480E-06	0.002	1.296E-05	0.001
BENZENE			0.013		0.002	3.304E-06	0.002	6.608E-06	0.001
1,2-DICHLOROETHANE			0.040		0.005	9.281E-06	0.005	1.856E-05	0.003
ETHYLBENZENE	0.512		7.777	1.024	1.036	3.945E-04	0.013	7.889E-04	0.006
METHYLENE CHLORIDE									
STYRENE	9.131		137.141	18.262	18.266	0.005	0.016	0.010	0.008
TOLUENE			0.055		0.007	5.798E-06	0.007	1.160E-05	0.004
2-BUTANONE			0.003		0.000	8.677E-07	4.541E-04	1.735E-06	2.270E-04
XYLENE			0.003		0.000	1.476E-07	4.297E-04	2.952E-07	2.149E-04
CHLOROETHANE			0.002		0.000	2.416E-06	2.433E-04	4.832E-06	1.217E-04
2-HEXANONE			4.991E-04		0.000	3.185E-08	6.654E-05	6.370E-08	3.327E-05
1,2-DICHLOROPROPANE			0.001		0.000	1.122E-07	9.428E-05	2.244E-07	4.714E-05
VINYL CHLORIDE			2.758E-04		0.000	6.159E-07	3.796E-05	1.232E-06	1.898E-05
PHENOL	0.512		13.758	1.024	1.832	1.272E-04	0.809	2.545E-04	0.404
BENZOIC ACID	0.120		9.755	0.240	1.299	4.489E-06	1.059	8.978E-06	0.530
FLUORENE			0.133		0.018	2.796E-08	0.018	5.591E-08	0.009
HEXACHLOROCYCLOPENTADIENE			83.778		11.159	1.535E-04	11.159	3.069E-04	5.579
2-METHYLNAPHTHALENE			0.066		0.009	1.187E-07	0.009	2.374E-07	0.004
2-METHYLPHENOL			0.258		0.034	7.164E-06	0.034	1.433E-05	0.017
4-METHYLPHENOL			0.067		0.009	2.933E-07	0.009	5.865E-07	0.004
NAPHTHALENE			1.364		0.182	5.460E-06	0.182	1.092E-05	0.091
2,4-DIMETHYLPHENOL			0.021		0.003	6.905E-08	0.003	1.381E-07	0.001
BIS(2-CHLOROETHYL)ETHER			1.252		0.167	1.524E-05	0.167	3.048E-05	0.083
METHYLCHLORIDE			0.007		0.001	2.336E-05	0.001	4.671E-05	0.001
ETHYLPHENOL			99.556		13.260	3.862E-04	13.261	7.724E-04	6.630
ISOPROPYLPHENOL			45.921		6.116	4.629E-04	6.117	9.258E-04	3.059
ISOPROPYENYLPHENOL			87.987		11.719	0.001	11.720	0.001	5.860
BISPHENOL A			300.674		40.047	2.660E-08	40.047	5.319E-08	20.024
CYCLOPENTADIENE			0.011		0.002	7.308E-06	0.002	1.462E-05	0.001
METHYLCYCLOPENTADIENE			0.780		0.104	2.343E-04	0.104	4.686E-04	0.052
PROPIONALDEHYDE			0.002		0.000	1.210E-06	2.682E-04	2.420E-06	1.341E-04
ACROLEIN			0.002		0.000	1.237E-06	3.075E-04	2.475E-06	1.538E-04
METHYLACETYLENE			0.005		0.001	1.595E-05	7.250E-04	3.191E-05	3.625E-04
ACETALDEHYDE			0.225		0.030	2.842E-04	0.031	5.684E-04	0.015
ACETIC ACID			2.204		0.294	1.814E-04	0.294	3.629E-04	0.147
FURAN			0.076		0.010	6.758E-05	0.010	1.352E-04	0.005
METHYLFURFURAL			50.614		6.741	4.628E-06	6.741	9.257E-06	3.371
BENZENE DIOL			8.430		1.123	7.343E-06	1.123	1.469E-05	0.561
BENZENE DIOL DIACETATE			1.396		0.186	4.956E-05	0.186	9.912E-05	0.093
BENZENE TRIOL TRIACETATE			23.303		3.104	3.699E-07	3.104	7.397E-07	1.552
CYCLOPENTENONE			0.309		0.041	1.531E-05	0.041	3.062E-05	0.021
PENTENYNE			0.001		0.000	8.473E-07	1.872E-04	1.695E-06	9.359E-05
BUTADIENE			0.001		0.000	1.847E-06	1.406E-04	3.693E-06	7.028E-05
4-NITROPHENOL	0.712		10.691	1.424	1.424	4.020E-07	8.035E-07	8.040E-07	4.018E-07
BUTYLBENZYLPHTHALATE	0.009		0.135	0.018	0.018				
BIS(2-ETHYLHEXYL)PHTHALATE	0.024		0.360	0.048	0.048				
4-METHYL-3-HEXANOL	0.144		2.162	0.288	0.288	3.026E-05	5.616E-05	6.052E-05	2.808E-05
PHENAZINE	0.153		2.297	0.306	0.306	2.437E-08	4.873E-08	4.875E-08	2.437E-08
TETRADECANOIC ACID	0.120		1.802	0.240	0.240	1.181E-08	2.362E-08	2.362E-08	1.181E-08
1-PHENYL-1H-BENZOTRIAZOLE	0.301		4.520	0.602	0.602	2.744E-08	5.488E-08	5.489E-08	2.744E-08
9-ACRIDINAMINE	0.196		2.943	0.392	0.392	3.605E-09	7.437E-09	7.209E-09	3.718E-09
4,6-DIMETHOXY-2(2H)-BENZOFURANONE	0.196		2.943	0.392	0.392	6.558E-08	1.311E-07	1.312E-07	6.556E-08
BENZALDEHYDE, (PHENYLMETHYLENE)HYDRAZONE	0.213		3.198	0.426	0.426	7.079E-09	1.416E-08	1.416E-08	7.079E-09
HEXADECANOIC ACID	1.292		19.401	2.584	2.584	3.394E-08	6.788E-08	6.789E-08	3.394E-08
OCTADECANOIC ACID	4.299		64.554	8.598	8.598	2.766E-08	5.531E-08	5.532E-08	2.766E-08
THIIRANE	0.891		13.285	1.782	1.769	0.007	5.125E-04	0.013	2.563E-04
1-BUTANOL	0.891		13.372	1.782	1.781	0.001	0.001	0.002	0.001
1-METHYLETHYL-BENZENE	0.423		6.351	0.846	0.846	1.485E-04	2.213E-04	2.969E-04	1.107E-04
DECANE	0.446		6.697	0.892	0.892	9.915E-05	1.678E-04	1.983E-04	8.389E-05
UNDECANE	0.312		4.685	0.624	0.624	3.288E-05	6.152E-05	6.577E-05	3.076E-05
ANILINE	0.312		4.685	0.624	0.624	4.421E-05	8.072E-05	8.843E-05	4.036E-05
2-ETHYL-1-HEXANOL	0.222		3.334	0.444	0.444	2.074E-05	3.985E-05	4.148E-05	1.993E-05
PCB			6.157		0.820	4.296E-09	0.820	8.592E-09	0.410
TOTAL PEAK THROUGHPUT, LB/HR	6168.3	44.8	122807.4	12336.5	16356.9	30.7	4036.9	61.4	2018.5
TOTAL AVERAGE THROUGHPUT, LB/HR	3731.4	44.8	95293.0	7462.9	12692.2	32.9	5250.6	65.9	2625.3

THIS DRAWING SUPERSEDES DRAWING 24915-07-M5-TNE-00001

NO.	DATE	DESCRIPTION	DR	CK	DL	PE	APPD
1	11-3-04	ISSUED FOR DESIGN (IFD)	GO	WW	SH	JB	JU
0	7-2-04	ISSUED FOR DESIGN (IFD)	WW	NI	SH	JB	JU

QUALITY ☐ LEVEL 1 ☒ LEVEL 2 ☐ LEVEL 3 ☐ ALL

BECHTEL PARSONS BLUE GRASS
A Joint Venture of Bechtel National, INC. and Parsons Infrastructure & Technology Group Inc.

DOD PROGRAM MANAGER FOR ASSEMBLED CHEMICAL WEAPONS ASSESSMENT EDGEWOOD, MARYLAND

US ARMY ENGINEERING AND SUPPORT CENTER, HUNTSVILLE HUNTSVILLE, ALABAMA

BLUE GRASS CHEMICAL AGENT DESTRUCTION PILOT PLANT PROJECT (BGCAPP)
RICHMOND, KENTUCKY

CONTRACT NO. DAAA09-03-D-0023

MUNITIONS DEMILITARIZATION BUILDING ENERGETICS NEUTRALIZATION PROCESS FLOW DIAGRAM

DRAWING NUMBER 24915-07-M5-ENS-00001 SHEET 3 OF 4 REV 1

PROFESSIONAL STAMP

07-M5-ENS-1-3.PFZ BGCAPP_E2.BDR

DESIGN FILE: DGNSPEC$$$$ PLOTTED BY: USER$ ON DATE$$$$ AT SYTIME USING COLOR$$$$

MATERIAL BALANCE TABLE FOR PFD: 24915-07-M5-ENS-00001
ENERGETICS NEUTRALIZATION REACTOR
CASE: AGENT H PROCESSING PEAK THROUGHPUT

STREAM NUMBER	41	543	544	545	551	552	553	554	8523
Description	Energetic Hydrolysate To ENR From one EBH Train	N2 Sweep To ENR	ENR Recirculation Pump Discharge	Energetic Hydrolysate To ENR From Both EBH Trains	Total ENR Energetic Hydrolysate To Storage Tanks	ENR Off Gas To One EBH Offgas Treatment Train	OTE Condensate Return From Both EBH Off Gas Treatment Trains	ENR Off Gas To Both EBH Offgas Treatment Trains	OTE Condensate Return From One EBH Off Gas Train
Temperature, oF	236	77	220	236	110	220	92	220	92
Pressure, PSIA	30	30	80	30	80	30	85	30	85
Instantaneous Volume Flow, GPM (ACFM)	3.6	(12.0)	17.9	3.6	12.0	(0.3)	0.6	(0.5)	0.3
Density, LB/FT^3	65.462	0.146	64.612	65.462	65.605	0.096	62.847	0.096	62.847
Viscosity, CP	0.595	0.018	0.521	0.595	1.226	0.019	0.658	0.019	0.658
MW		28.013				23.119		23.119	
Enthalpy, MMBTU/HR	-2.894		-3.76	-2.894	-3.802	-0.077	-0.972	-0.077	-0.972
Component Flows, LB/HR									
O2			2.917E-04		3.886E-05	0.001	0.001	0.001	0.001
N2		44.822	4.876		0.649	22.087	0.002	44.174	0.001
H2						6.926E-09	1.385E-08	1.385E-08	6.926E-09
CO2									
CO									
NH3	0.005		0.058	0.010	0.008	0.001	1.621E-05	0.002	8.107E-06
N2O									
NO						6.401E-10	1.281E-09	1.280E-09	6.403E-10
NO2			5.560E-06		7.405E-07	2.246E-07	1.190E-06	4.492E-07	5.949E-07
H2O	307.560		6526.269	615.120	869.242	13.621	281.364	27.242	140.682
NAOH	138.040		2072.809	276.080	276.080				
HCL									
H2SO4									
HCLO									
HNO3									
NA2SO4									
NANO2	4.560		68.467	9.120	9.119	3.800E-04		7.600E-04	
NH4CL(S)			83.521		11.124		11.124		5.562
AL(OH)3									
SODIUM FORMATE	17.160		257.675	34.320	34.320				
SODIUM ACETATE	1.160		17.419	2.320	2.320				
GLYCEROL									
NAALO2	4.740		71.176	9.480	9.480				
PCB									
TOTAL PEAK THROUGHPUT, LB/HR	473.2	44.8	9102.3	946.5	1212.3	35.7	292.5	71.4	146.2
TOTAL AVERAGE THROUGHPUT, LB/HR	372.8	44.8	7512.6	745.6	1000.6	37.0	284.1	284.1	142.1

THIS DRAWING SUPERSEDES DRAWING 24915-07-M5-TNE-00001

NO.	DATE	DESCRIPTION	DR	CK	DL	PE	APPD
1	11-3-04	ISSUED FOR DESIGN (IFD)	GO	WW	SH	JB	JU
0	7-2-04	ISSUED FOR DESIGN (IFD)	WW	NI	SH	JB	JU

QUALITY ☐ LEVEL 1 ☒ LEVEL 2 ☐ LEVEL 3 ☐ ALL

BECHTEL PARSONS BLUE GRASS JV
A joint venture of Bechtel National, Inc. and Parsons Infrastructure & Technology Group, Inc.

DOD PROGRAM MANAGER FOR ASSEMBLED CHEMICAL WEAPONS ASSESSMENT EDGEWOOD, MARYLAND

US ARMY ENGINEERING AND SUPPORT CENTER, HUNTSVILLE HUNTSVILLE, ALABAMA

BLUE GRASS CHEMICAL AGENT DESTRUCTION PILOT PLANT PROJECT (BGCAPP)
RICHMOND, KENTUCKY

CONTRACT NO. DAAA09-03-D-0023

MUNITIONS DEMILITARIZATION BUILDING
ENERGETICS NEUTRALIZATION REACTORS
PROCESS FLOW DIAGRAM

DRAWING NUMBER 24915-07-M5-ENS-00001 | SHEET 4 OF 4 | REV 1

PROFESSIONAL STAMP

07-M5-ENS-1-4.PFZ

BGCAPP_E2.BDR

DESIGN FILE: DONSPEC
PLOTTED BY: USER ON DATE AT SYTME USING COLOR

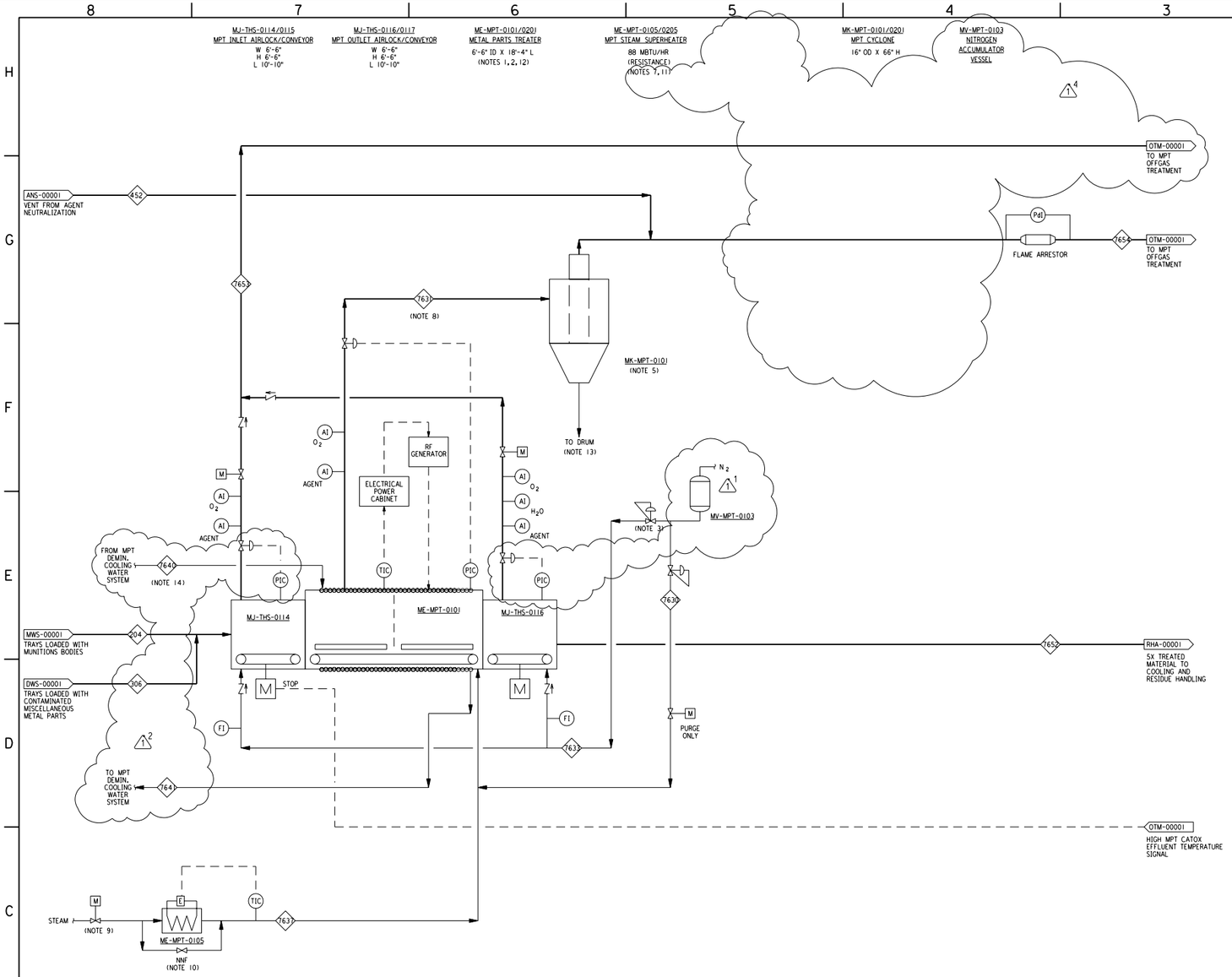

NOTES:

1. MUNITIONS AND MISCELLANEOUS METAL PARTS TEMPERATURE TO BE VERIFIED WITH OPTICAL PYROMETER AND INTERLOCKED WITH DISCHARGE DOOR OF MPT SO THAT TIME AND TEMPERATURE REQUIREMENTS ARE SATISFIED BEFORE DISCHARGING MUNITIONS TRAY.
2. METAL PARTS TREATER RECEIVES MATERIALS PLACED IN ONE MUNITIONS TRAY PER BATCH. BATCH CYCLE TIME IS 120 MINUTES.
3. PURGE AIRLOCK WITH NITROGEN AT THE END OF HEATING CYCLE, PRIOR TO MONITORING FOR AGENT PRESENCE.
4. DELETED
5. CYCLONE IS ALSO REQUIRED FOR CLOSURE ACTIVITIES.
6. FOR SYMBOL DEFINITION SEE DRAWING 24915-00-M5-00-00002.
7. STEAM SUPERHEATER IS SIZED TO SUPPLY BOTH MPTS. THE TWO MPT STEAM SUPERHEATERS ARE LINKED WITH TIE-INS.
8. ASPEN EQUILIBRIUM CALCULATIONS INDICATE NEGLIGIBLE AMOUNTS OF TDG. LAB DATA IS NOT AVAILABLE TO VERIFY THE ASPEN CALCULATIONS.
9. FOR EMERGENCY USE ONLY TO ISOLATE THE STEAM SYSTEM.
10. FOR SHUTDOWN ONLY.
11. MBTU/HR = 1,000 BTU/HR
12. DELETED
13. CYCLONE ASH WILL BE SAMPLED AND SHIPPED OFF TO HAZARDOUS WASTE DISPOSAL SYSTEM IF IT IS CLEAN, OTHERWISE, CYCLONE ASH WILL RUN THROUGH MPT.
14. MPT DEMINERALIZED COOLING WATER IS SUPPLIED TO COOL THE MPT COILS, DOORS, POWER SUPPLY PANEL, LOAD MATCHING PANEL, AND BUS BAR.

THIS DRAWING SUPERSEDES DRAWING 24915-07-M5-TMP-00001

NO.	DATE	DESCRIPTION	DR	CK	DL	PE	APPD
1	10-21-04	ISSUED FOR DESIGN (IFD)	WW	NI	SH	JB	JU
0	6-11-04	ISSUED FOR DESIGN (IFD)	BC	WW	SH	JB	JU

QUALITY ☒ LEVEL 1 ☐ LEVEL 2 ☐ LEVEL 3 ☐ ALL

BECHTEL PARSONS BLUE GRASS
A JOINT VENTURE OF BECHTEL NATIONAL, INC. AND PARSONS INFRASTRUCTURE & TECHNOLOGY GROUP, INC.

DOD PROGRAM MANAGER FOR ASSEMBLED CHEMICAL WEAPONS ASSESSMENT EDGEWOOD, MARYLAND

US ARMY ENGINEERING AND SUPPORT CENTER, HUNTSVILLE HUNTSVILLE, ALABAMA

BLUE GRASS CHEMICAL AGENT DESTRUCTION PILOT PLANT PROJECT (BGCAPP)
RICHMOND, KENTUCKY

CONTRACT NO. DAAA09-03-D-0023

MUNITIONS DEMILITARIZATION BUILDING METAL PARTS TREATMENT PROCESS FLOW DIAGRAM

DRAWING NUMBER 24915-07-M5-MPT-00001 | SHEET 1 OF 4 | REV 1

PROFESSIONAL STAMP

DESIGN FILE: DDASFC15 PLOTTED BY: USER4 ON DATE:8/8/03 AT SYTME USING COLOR4

07-M5-MPT-1-1.PFZ BGCAPP.E2.BDR

S:\2D\pr\07-M5-MPT-1-1.pfz 10/28/2004 05:49:51 PM

MATERIAL BALANCE TABLE FOR PFD: 24915-07-M5-MPT-00001
METAL PARTS TREATMENT
CASE: AGENT GB, INSTANTANEOUS CASE

STREAM NUMBER	204	306	452	7630	7631	7633	7637	7640	7641	7652	7653	7654
	Munitions Bodies	Contaminated Miscellaneous Metal	Agent Neutralization Vent Gas	MPT Nitrogen Purge	MPT Effluent Gas	Nitrogen to Air Lock/ Conveyor	Superheated Steam To MPT	Demin Cooling Water	Demin Cooling Water	5X Metal Parts	N2 Sweep from MPT Airlocks	MPT Off Gas to Pre-Catalytic Treament Unit
TEMPERATURE, °F	77		75		1100	100	1000	75	91	1100	300	1061
PRESSURE, PSIA	14.25		14.00		14.25	14.00	66.82	70.00	60.00	14.23	14.00	14.00
INSTANTANEOUS FLOW, GPM (ACFM)	0.5		(9.9)	NNF	(537.1)	(92.0)	(54.1)	171.0	171.0		(125.0)	(560.8)
DENSITY, LB/FT3			0.068		0.016	0.065	0.077	62.31	62.31		0.048	0.016
VISCOSITY, CP			0.017		0.034	0.019	0.030	0.779	0.671		0.024	0.024
MW			29.59		18.27	28.01	18.02				28.01	18.76
ENTHALPY, MMBTU/HR			-0.025		-1.686	0.002	-1.333	-583.148	-581.827		0.02	-1.711
COMPONENT INSTANTAN. FLOW, LB/HR												
GB	234.36											
DICDI	10.080											
TBA	4.91		0.001									0.001
CH2F2	1.764		4.592									4.59
MF			2.70									2.70
DIPU			0.001									0.001
IPA												
N2			35.88			360.38					360.38	35.88
O2												
H2					23.92							23.92
CO2					120.05							120.05
CO					66.81							66.81
CH4					39.94							39.94
C2H6					0.001							0.001
NH3					3.168							3.17
NO2												
NO												
N2H4												
HCN					0.01							0.006
SO2												
CL2												
F2												
H2O			0.04		93.68		250.00	85459.21	85459.21			93.71
CF4												
F2C2H4												
NAOH												
HCL	0.25				0.25							0.25
HF					34.83							34.83
P2O5					118.728							118.73
HNO3												
HCLO												
METAL	2624.93	5.17								2630.10		
TOTAL INSTANTANEOUS FLOW, LB/HR	2,876.3	5.17	43.2		501.4	360.4	250.0	85,459.2	85,459.2	2,630.1	360.4	544.6
TOTAL PEAK THROUGHPUT, LB/HR	2,628.7	5.17	15.8		254.3	360.4	250.0	85,459.2	85,459.2	2,629.5	360.4	270.2
TOTAL AVERAGE THROUGHPUT, LB/HR	1,910.2	3.47	10.4		253.2	360.4	250.0	85,459.2	85,459.2	1,910.5	360.4	263.5

NOTES:

1. THE MASS AND ENERGY BALANCES ARE BASED ON 2% HEEL FOR EQUIPMENT SIZING PURPOSES. NO HEEL (0%) IS NOT A CONTROLLING CASE FOR THE OTM DESIGN.
2. THE INSTANTANEOUS FLOW WAS DETERMINED BY THE EVAPORATION RATE OF THE OTM DESIGN.

THIS DRAWING SUPERSEDES DRAWING 24915-07-M5-TMP-00001

NO.	DATE	DESCRIPTION	DR	CK	DL	PE	APPD
1	10-28-04	ISSUED FOR DESIGN (IFD) SHEET REDRAWN	WW	JW	SH	JB	JU
0	6-11-04	ISSUED FOR DESIGN (IFD)	BC	WW	SH	JB	JU

QUALITY ☒ LEVEL 1 ☐ LEVEL 2 ☐ LEVEL 3 ☐ ALL

BECHTEL PARSONS BLUE GRASS
A Joint Venture of Bechtel National, Inc. and Parsons Infrastructure & Technology Group Inc.

DOD PROGRAM MANAGER FOR ASSEMBLED CHEMICAL WEAPONS ASSESSMENT EDGEWOOD, MARYLAND

US ARMY ENGINEERING AND SUPPORT CENTER, HUNTSVILLE HUNTSVILLE, ALABAMA

BLUE GRASS CHEMICAL AGENT DESTRUCTION PILOT PLANT PROJECT (BGCAPP)
RICHMOND, KENTUCKY

CONTRACT NO. DAAA09-03-D-0023

MUNITIONS DEMILITARIZATION BUILDING METAL PARTS TREATMENT PROCESS FLOW DIAGRAM

DRAWING NUMBER 24915-07-M5-MPT-00001 | SHEET 2 OF 4 | REV 1

PROFESSIONAL STAMP

DESIGN FILE: DGNSEC01 PLOTTED BY: USER# ON DATE$$$$$$ AT SYTMC USING COLOR$$$$$$

07-M5-MPT-1-2.PFZ BGCAPP_E2.BDR

MATERIAL BALANCE TABLE FOR PFD: 24915-07-M5-MPT-00001
METAL PARTS TREATMENT
CASE: AGENT VX, INSTANTANEOUS CASE

STREAM NUMBER	204	306	452	7630	7631	7633	7637	7640	7641	7652	7653	7654
	Munitions Bodies	Contaminated Miscellaneous Metal	Agent Neutralization Vent Gas	MPT Nitrogen Purge	MPT Effluent Gas	Nitrogen to Air Lock/ Conveyor	Superheated Steam To MPT	Demin Cooling Water	Demin Cooling Water	5X Metal Parts	N2 Sweep from MPT Airlocks	MPT Off Gas to Pre-Catalytic Treament Unit
TEMPERATURE, °F	77		73		1100	100	1000	75	89	1100	300	1046
PRESSURE, PSIA	14.25		14.00		14.00	14.00	64.25	70.00	60.00	14.23	14.00	14.00
INSTANTANEOUS FLOW, GPM (ACFM)	0.5		(14.4)	NNF	(544.5)	(92.0)	(56.2)	171.0	171.0		(125.0)	(576.1)
DENSITY, LB/FT3			0.068		0.015	0.065	0.074	62.308	62.308		0.048	0.016
VISCOSITY, CP			0.018		0.049	0.019	0.030	1.176	1.073		0.024	0.026
MW			27.80		17.44	28.01	18.02				28.01	18.17
ENTHALPY, MMBTU/HR			-0.007		-1.277	0.002	-1.333	-589.61	-588.288		0.02	-1.283
COMPONENT INSTANTAN. FLOW, LB/HR												
VX	218.69											
DICDI	5.875											
PYRO	7.05											
R-SH	2.350		0.002									0.002
SULFUR	0.33											
DIPU												
ETHANOL			0.017									0.02
N2			57.87			360.38					360.38	57.87
O2												
H2					23.42							23.42
CO2					132.98							132.98
CO					86.41							86.41
NH3					15.74							15.74
NO2												
NO												
HCN					0.044							0.04
H2S					28.73							28.73
COS					0.43							0.43
SO2												
SO3												
CH4					56.28							56.28
C2H6					0.002							0.002
H2O			1.07		78.57		250.0	85459.2	85459.2			79.64
NAOH												
H2SO4	0.705											
HNO3												
P2O5					62.40							62.40
METAL	2353.00	6.45								2359.45		
TOTAL INSTANTANEOUS FLOW, LB/HR	2,588.0	6.45	58.96		485.0	360.4	250.0	85,459.2	85,459.2	2,359.5	360.4	544.0
TOTAL PEAK THROUGHPUT, LB/HR	2,356.1	6.45	10.7		253.1	360.4	250.0	85,459.2	85,459.2	2,359.5	360.4	263.8
TOTAL AVERAGE THROUGHPUT, LB/HR	1,721.8	4.36	6.9		252.3	360.4	250.0	85,459.2	85,459.2	1,723.9	360.4	259.2

NOTES:

1. THE MASS AND ENERGY BALANCES ARE BASED ON 2% HEEL FOR EQUIPMENT SIZING PURPOSES. NO HEEL (0%) IS NOT A CONTROLLING CASE FOR THE OTM DESIGN.
2. THE INSTANTANEOUS FLOW WAS DETERMINED BY THE EVAPORATION RATE OF THE OTM DESIGN.

THIS DRAWING SUPERSEDES DRAWING 24915-07-M5-TMP-00001

NO.	DATE	DESCRIPTION	DR	CK	DL	PE	APPD
1	10-28-04	ISSUED FOR DESIGN (IFD) SHEET REDRAWN	WW	NI	SH	JB	JU
0	6-11-04	ISSUED FOR DESIGN (IFD)	BC	WW	SH	JB	JU

QUALITY ☒ LEVEL 1 ☐ LEVEL 2 ☐ LEVEL 3 ☐ ALL

BECHTEL PARSONS BLUE GRASS
A JOINT VENTURE OF BECHTEL NATIONAL, INC. AND PARSONS INFRASTRUCTURE & TECHNOLOGY GROUP INC.

DOD PROGRAM MANAGER FOR ASSEMBLED CHEMICAL WEAPONS ASSESSMENT EDGEWOOD, MARYLAND

US ARMY ENGINEERING AND SUPPORT CENTER, HUNTSVILLE HUNTSVILLE, ALABAMA

BLUE GRASS CHEMICAL AGENT DESTRUCTION PILOT PLANT PROJECT (BGCAPP)
RICHMOND, KENTUCKY

CONTRACT NO. DAAA09-03-D-0023

MUNITIONS DEMILITARIZATION BUILDING METAL PARTS TREATMENT PROCESS FLOW DIAGRAM

DRAWING NUMBER 24915-07-M5-MPT-00001 | SHEET 3 OF 4 | REV 1

PROFESSIONAL STAMP

07-M5-MPT-1-3.PFZ BGCAPP_E2.BDR

DESIGN FILE: DONSBERG
PLOTTED BY: USER# ON DATE AT SYTMC USING COLOR

MATERIAL BALANCE TABLE FOR PFD: 24915-07-M5-MPT-00001
METAL PARTS TREATMENT
CASE: AGENT H, INSTANTANEOUS CASE

STREAM NUMBER	204	306	452	7630	7631	7633	7637	7640	7641	7652	7653	7654
	Munitions Bodies	Contaminated Miscellaneous Metal	Agent Neutralization Vent Gas	MPT Nitrogen Purge	MPT Effluent Gas	Nitrogen to Air Lock/ Conveyor	Superheated Steam To MPT	Demin Cooling Water	Demin Cooling Water	5X Metal Parts	N2 Sweep from MPT Airlocks	MPT Off Gas to Pre-Catalytic Treament Unit
TEMPERATURE, °F	77		75		1100	100	1000	75	89	1100	300	1003
PRESSURE, PSIA	14.23		14.00		14.23	14.23	64.25	70.00	60.00	14.23	14.23	14.00
INSTANTANEOUS FLOW, GPM (ACFM)	0.2		(18.05)	NNF	(415.4)	(92.0)	(56.2)	171.0	171.0		(125.0)	(446.0)
DENSITY, LB/FT3			0.068		0.016	0.066	0.074	62.308	62.308		0.049	0.017
VISCOSITY, CP			0.018		0.036	0.019	0.030	1.176	1.073		0.024	0.026
MW			27.79		18.40	28.01	18.02				28.01	19.44
ENTHALPY, MMBTU/HR			-0.009		-1.191	0.002	-1.333	-589.61	-588.288		0.02	-1.2
COMPONENT INSTANTAN. FLOW, LB/HR												
HD	80.96											
Q	11.120											
DITHIANE	1.86											
HS3	2.264		2.9E-06									
DCE	1.63											
SULFONIUM	31.59											
CYCLIC												
SULFUR	10.554											
Q-OH												
TDG												
EG												
N2			72.43			366.30					366.30	72.43
O2												
H2					13.99							13.99
CO2					109.756							109.76
CO					23.05							23.05
NH3												
NO2												
NO												
N2H4												
HCN												
H2S					45.66							45.66
COS					0.30							0.30
SO2												
SO3												
CL2												
CH4					2.97							2.97
C2H6												
H2O			1.437		145.2		250.0	85459.2	85459.2			146.67
NAOH												
HCL					49.02							49.02
HCLO												
HNO3												
NANO3												
NANO2												
METAL	2152.02	3.25								2155.27		
TOTAL INSTANTANEOUS FLOW, LB/HR	2,292.0	3.25	73.9		390.0	366.3	250.0	85,459.2	85,459.2	2,155.3	366.3	463.8
TOTAL PEAK THROUGHPUT, LB/HR	2,138.1	3.25	7.4		255.3	366.3	250.0	85,459.2	85,459.2	2,136.0	366.3	262.7
TOTAL AVERAGE THROUGHPUT, LB/HR	1,406.2	2.14	4.9		253.5	366.3	250.0	85,459.2	85,459.2	1,404.8	366.3	258.4

NOTES:

1. THE MASS AND ENERGY BALANCES ARE BASED ON 2% HEEL FOR EQUIPMENT SIZING PURPOSES. NO HEEL (0%) IS NOT A CONTROLLING CASE FOR THE OTM DESIGN.
2. THE INSTANTANEOUS FLOW WAS DETERMINED BY THE EVAPORATION RATE OF THE OTM DESIGN.

THIS DRAWING SUPERSEDES DRAWING 24915-07-M5-TMP-00001

NO.	DATE	DESCRIPTION	DR	CK	DL	PE	APPD
2	10-28-04	ISSUED FOR DESIGN (IFD) SHEET REDRAWN	WW	FJ	SH	JB	JU
1	6-11-04	ISSUED FOR DESIGN (IFD)	BC	WW	SH	JB	JU

QUALITY ☒ LEVEL 1 ☐ LEVEL 2 ☐ LEVEL 3 ☐ ALL

BECHTEL PARSONS BLUE GRASS
A JOINT VENTURE OF BECHTEL NATIONAL, INC. AND PARSONS INFRASTRUCTURE & TECHNOLOGY GROUP INC.

DOD PROGRAM MANAGER FOR ASSEMBLED CHEMICAL WEAPONS ASSESSMENT EDGEWOOD, MARYLAND

US ARMY ENGINEERING AND SUPPORT CENTER, HUNTSVILLE HUNTSVILLE, ALABAMA

BLUE GRASS CHEMICAL AGENT DESTRUCTION PILOT PLANT PROJECT (BGCAPP)
RICHMOND, KENTUCKY

CONTRACT NO. DAAA09-03-D-0023

MUNITIONS DEMILITARIZATION BUILDING METAL PARTS TREATMENT PROCESS FLOW DIAGRAM

DRAWING NUMBER 24915-07-M5-MPT-00001 | SHEET 4 OF 4 | REV 1

PROFESSIONAL STAMP

07-M5-MPT-1-4.PFZ BGCAPP_E2.BDR

DESIGN FILE: DONSBERG PLOTTED BY: USER# ON DATE AT SYTMC USING COLOR

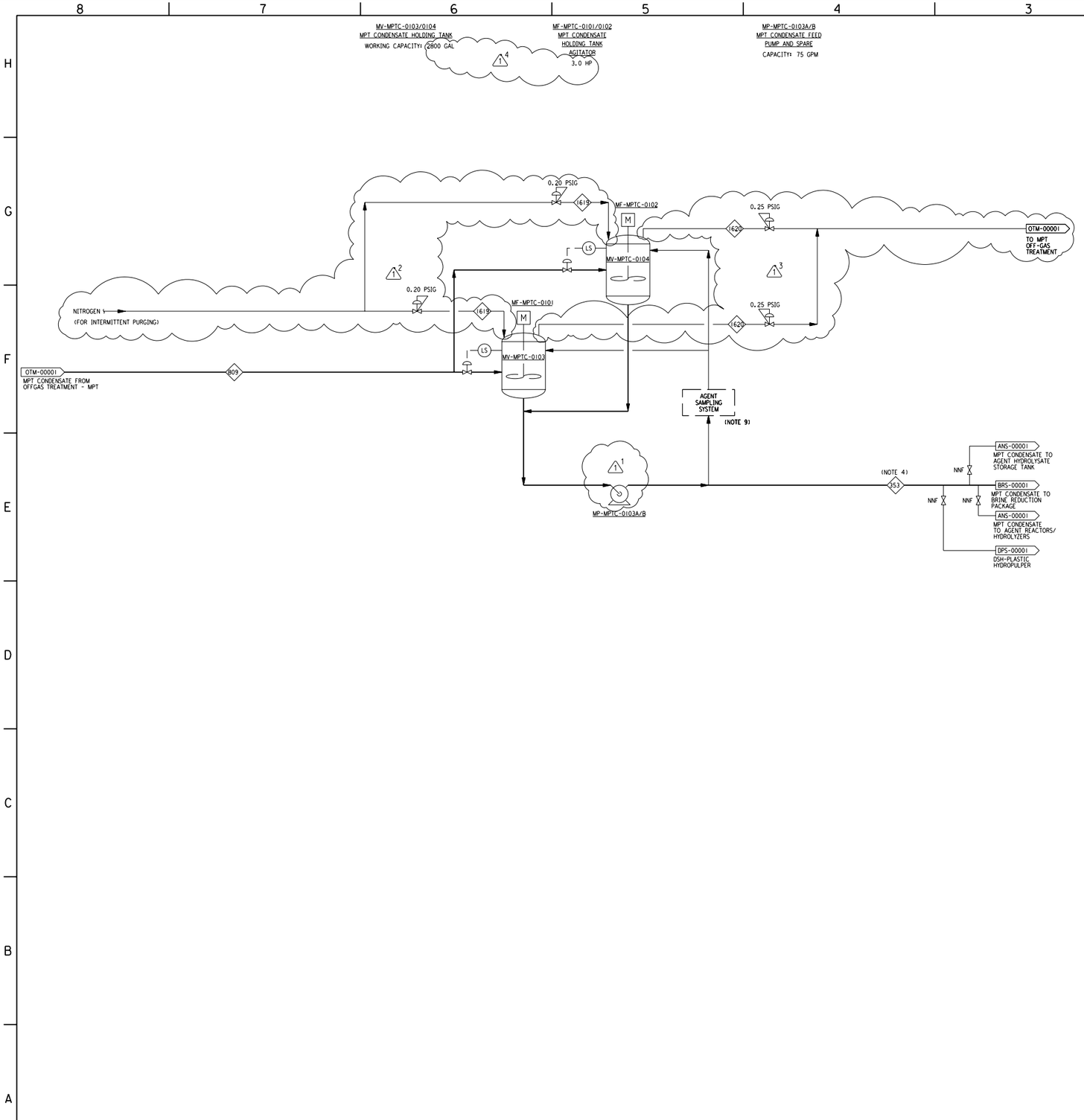

NOTES:

1. DELETED
2. DELETED
3. DELETED
4. THE MPT CONDENSATE WILL BE COLLECTED IN THE MPT CONDENSATE HOLDING TANKS IN BATCH MODE AND TESTED FOR THE PRESENCE OF AGENT. NORMALLY, AGENT IS NOT EXPECTED TO BE PRESENT AND THE MPT CONDENSATE WILL BE SENT TO THE BRINE REDUCTION PACKAGE. IF ORGANICS ARE PRESENT, MPT CONDENSATE WILL BE SENT TO HSS. IF AGENT IS DETECTED, THE CONDENSATE WILL BE SENT TO THE AGENT HYDROLYZERS. CLEARED MPT CONDENSATE MAY BE USED IN THE DSH HYDROPULPER AS MAKE-UP DILUTION WATER IF NEEDED.
5. DELETED
6. FOR SYMBOL DEFINITION SEE DRAWING 24915-00-M5-00-00002.
7. DELETED
8. ALL STORAGE TANK COMPONENTS ARE LOCATED INSIDE AGENT NEUTRALIZATION ROOM.
9. SAMPLING SYSTEM IS LOCATED IN THE GLOVE BOX. LOCAL SAMPLE CONNECTION IS ALSO PROVIDED TO BE USED AS AND IF REQUIRED.

THIS DRAWING SUPERSEDES DRAWING 24915-07-M5-H00-00001

NO.	DATE	DESCRIPTION	DR	CK	DL	PE	APPD
1	10-13-04	ISSUED FOR DESIGN (IFD)	PC	NI	SH	JB	JU
0	6-11-04	ISSUED FOR DESIGN (IFD)	PC	EV	SH	JB	JU

QUALITY ☐ LEVEL 1 ☒ LEVEL 2 ☐ LEVEL 3 ☐ ALL

BECHTEL PARSONS BLUE GRASS
A JOINT VENTURE OF BECHTEL NATIONAL, INC. AND PARSONS INFRASTRUCTURE & TECHNOLOGY GROUP INC.

DOD PROGRAM MANAGER FOR ASSEMBLED CHEMICAL WEAPONS ASSESSMENT EDGEWOOD, MARYLAND

US ARMY ENGINEERING AND SUPPORT CENTER, HUNTSVILLE HUNTSVILLE, ALABAMA

BLUE GRASS CHEMICAL AGENT DESTRUCTION PILOT PLANT PROJECT (BGCAPP)
RICHMOND, KENTUCKY

CONTRACT NO. DAAA09-03-D-0023

MUNITIONS DEMILITARIZATION BUILDING MPT CONDENSATE SYSTEM PROCESS FLOW DIAGRAM

DRAWING NUMBER 24915-07-M5-MPTC-00001 | SHEET 1 OF 2 | REV 1

PROFESSIONAL STAMP

07-M5-MPTC-1-1.PFZ BGCAPP_E2.BDR

DESIGN FILE: DGNSEC01 PLOTTED BY: USER# ON DATE$$$$$$ AT SYTMC USING COLOR$$$$$$

S:\2D\pr\07-M5-MPTC-1-1.pfz 10/28/2004 05:51:44 PM

NOTES:

1. EACH TYPE OF AGENT WILL BE PROCESSED IN A SEPARATE CAMPAIGN.
2. DELETED
3. DELETED
4. DELETED

MATERIAL BALANCE TABLE FOR PFD: 24915-07-M5-MPTC-00001
MPT CONDENSATE SYSTEM — GB INSTANTANEOUS CASE

STREAM NUMBER	353	809	1619	1620
	MPT COND TO BRS, HYDROPULPER, ETC.	COND TO MPT COND HOLDING TANK	NITROGEN TO MPTC HOLDING TANK	NITROGEN TO OFFGAS TREATMENT
TEMPERATURE, F	77	115	77	77
PRESSURE, PSIA	34.23	40.00	14.43	14.48
INSTANTANEOUS FLOW, GPM	75.0	14.3	(10.0)	(3.8)
DENSITY, LB/FT3	61.89	61.44	0.070	0.070
VISCOSITY, CP	0.74	0.53	0.018	0.018
MW			28.02	28.02
COMPONENT INSTANTAN. FLOW, LB/HR				
N2	0.037	0.037	42.00	14.27
O2	0.011	0.011		
CO2	0.018	0.018		
NH3				
DIPU	0.001	0.001		
H2O	6844.1	6844.1		
HCLO				
P2O5	118.73	118.73		
NACL(S)	0.404	0.404		
NA2CO3(S)				
NAHCO3(S)	0.257	0.257		
NAHCO3(S)				
NAF(S)	83.84	83.84		
NA2SO3(S)				
NAHSO3(S)				
NA2SO4(S)				
NANO2(S)				
NANO3(S)	0.001	0.001		
NA3PO4(S)				
TOTAL INSTANTANEOUS FLOW, LB/HR	7,047.4	7,047.4	42.00	14.27
TOTAL PEAK THROUGHPUT, LB/HR	2,982.8	2,982.8	14.27	14.27
TOTAL AVERAGE THROUGHPUT, LB/HR	2,965.2	2,965.2	14.27	14.27

MATERIAL BALANCE TABLE FOR PFD: 24915-07-M5-MPTC-00001
MPT CONDENSATE SYSTEM — VX INSTANTANEOUS CASE

STREAM NUMBER	353	809	1619	1620
	MPT COND TO BRS, HYDROPULPER, ETC.	COND TO MPT COND HOLDING TANK	NITROGEN TO MPTC HOLDING TANK	NITROGEN TO OFFGAS TREATMENT
TEMPERATURE, F	77	142	77	77
PRESSURE, PSIA	34.23	45.00	14.43	14.48
INSTANTANEOUS FLOW, GPM	75.0	27.9	(10.0)	(3.5)
DENSITY, LB/FT3	63.32	62.40	0.070	0.070
VISCOSITY, CP	0.78	0.45	0.018	0.018
MW			28.02	28.02
COMPONENT INSTANTAN. FLOW, LB/HR				
N2	0.052	0.052	42.00	13.19
O2	0.016	0.016		
CO2	0.098	0.098		
NH3	0.001	0.001		
DIPU				
H2O	13606	13606		
HCLO				
P2O5				
NACL(S)				
NA2CO3(S)	0.012	0.012		
NAHCO3(S)				
NAHCO3(S)	2.06	2.06		
NAF(S)				
NA2SO3(S)	111.10	111.10		
NAHSO3(S)	34.72	34.72		
NA2SO4(S)	68.84	68.84		
NANO2(S)	0.003	0.003		
NANO3(S)	0.004	0.004		
NA3PO4(S)	144.15	144.15		
TOTAL INSTANTANEOUS FLOW, LB/HR	13,967.1	13,967.1	42.00	13.19
TOTAL PEAK THROUGHPUT, LB/HR	2,853.8	2,853.8	13.19	13.19
TOTAL AVERAGE THROUGHPUT, LB/HR	2,842.8	2,842.8	13.19	13.19

MATERIAL BALANCE TABLE FOR PFD: 24915-07-M5-MPTC-00001
MPT CONDENSATE SYSTEM — H INSTANTANEOUS CASE

STREAM NUMBER	353	809	1619	1620
	MPT COND TO BRS, HYDROPULPER, ETC.	COND TO MPT COND HOLDING TANK	NITROGEN TO MPTC HOLDING TANK	NITROGEN TO OFFGAS TREATMENT
TEMPERATURE, F	77	101	77	77
PRESSURE, PSIA	34.23	45.00	14.43	14.48
INSTANTANEOUS FLOW, GPM	75.0	9.1	(10.0)	(1.2)
DENSITY, LB/FT3	64.87	64.58	0.070	0.070
VISCOSITY, CP	0.79	0.64	0.018	0.018
MW			28.02	28.02
COMPONENT INSTANTAN. FLOW, LB/HR				
N2	0.018	0.018	42.00	4.71
O2	0.009	0.009		
CO2	0.019	0.019		
NH3				
DIPU				
H2O	4474.6	4474.6		
HCLO	0.030	0.030		
P2O5				
NACL(S)	78.15	78.15		
NA2CO3(S)	0.002	0.002		
NAHCO3(S)				
NAHCO3(S)	0.377	0.377		
NAF(S)				
NA2SO3(S)	140.69	140.69		
NAHSO3(S)	23.74	23.74		
NA2SO4(S)				
NANO2(S)	0.001	0.001		
NANO3(S)	0.001	0.001		
NA3PO4(S)				
TOTAL INSTANTANEOUS FLOW, LB/HR	4,717.6	4,717.6	42.00	4.71
TOTAL PEAK THROUGHPUT, LB/HR	2,840.4	2,840.4	4.71	4.71
TOTAL AVERAGE THROUGHPUT, LB/HR	2,820.7	2,820.7	4.71	4.71

1

THIS DRAWING SUPERSEDES DRAWING 24915-07-M5-HQD-00001

NO.	DATE	DESCRIPTION	DR	CK	DL	PE	APPD
1	10-28-04	ISSUED FOR DESIGN (IFD)	PC	NI	SH	JB	JU
0	6-11-04	ISSUED FOR DESIGN (IFD)	PC	EV	SH	JB	JU

QUALITY ☐ LEVEL 1 ☒ LEVEL 2 ☐ LEVEL 3 ☐ ALL

BECHTEL PARSONS BLUE GRASS
A Joint Venture of Bechtel National, INC. and Parsons Infrastructure & Technology Group Inc.

DOD PROGRAM MANAGER FOR ASSEMBLED CHEMICAL WEAPONS ASSESSMENT EDGEWOOD, MARYLAND

US ARMY ENGINEERING AND SUPPORT CENTER, HUNTSVILLE HUNTSVILLE, ALABAMA

BLUE GRASS CHEMICAL AGENT DESTRUCTION PILOT PLANT PROJECT (BGCAPP)
RICHMOND, KENTUCKY

CONTRACT NO. DAAA09-03-D-0023

MUNITIONS DEMILITARIZATION BUILDING MPT CONDENSATE SYSTEM PROCESS FLOW DIAGRAM

PROFESSIONAL STAMP

DRAWING NUMBER 24915-07-M5-MPTC-00001 | SHEET 2 OF 2 | REV 1

07-M5-MPTC-1-2.PFZ

BGCAPP_E2.BDR

DESIGN FILE: DGNSPEC$$
PLOTTED BY: USER$ ON DATE$$$$$$$$ AT SYTIME USING COLOR$$$

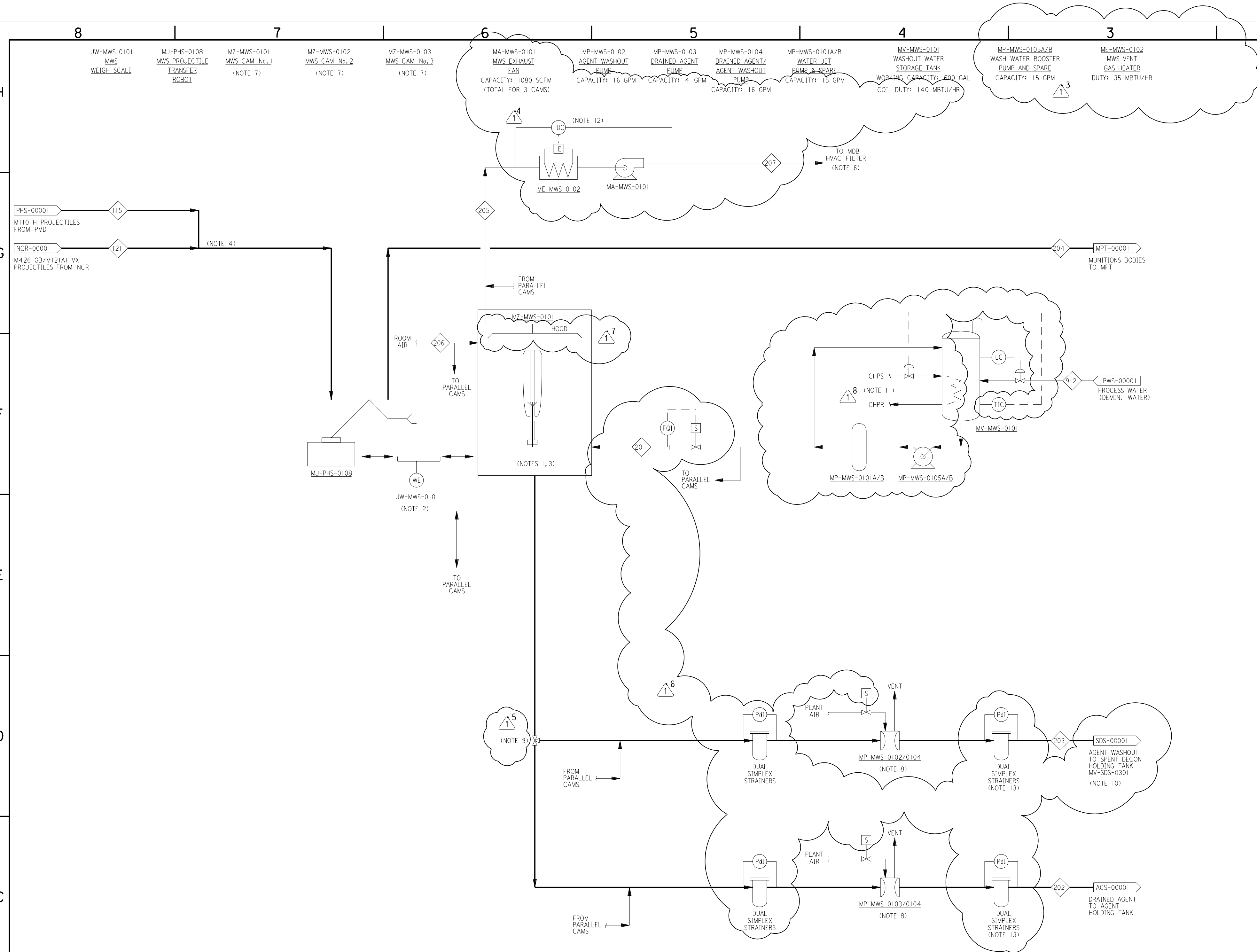

NOTES:

1. MUNITIONS ARE FLUSHED BY USING HIGH PRESSURE WATER JETS.
2. THE DRAINED AGENT SHALL BE QUANTIFIED BY TAKING THE DIFFERENCE BETWEEN THE MUNITIONS WEIGHT BEFORE AND AFTER AGENT REMOVAL. THE QUANTIFICATION WILL BE ACCOMPLISHED BY WEIGHING INDIVIDUAL MUNITIONS AT JW-MWS-0101.
3. TO ACCESS AGENT IN PROJECTILES, THE BURSTER TUBE IS HYDRAULICALLY FAILED AT THE ADAPTER, AND THE TUBE IS COLLAPSED INTO THE AGENT CAVITY.
4. DEBURSTERED MUNITIONS ARE PLACED IN TRAYS AND MOVED TO THE CAM STATIONS THROUGH A TRANSFER CONVEYOR. A ROBOT WILL TRANSFER THE MUNITIONS FROM THE TRAY TO THE CAM STATION. DRAINED AND WASHED MUNITIONS ARE REMOVED FROM THE CAM STATIONS, PUT BACK ONTO ANOTHER TRAY, AND CONVEYED TO THE MPT.
5. FOR SYMBOL DEFINITION SEE DRAWING 24915-00-M5-00-00002.
6. SOME ORGANIC VAPORS WILL BE PRESENT INSIDE THE MUNITION HEADSPACE IN UNQUANTIFIABLE AMOUNTS, THEREFORE, THE DESIGN SHOULD ACCOMODATE THE PRESENCE OF SUCH VAPORS.
7. TWO CAMS OPERATING, ONE STAND-BY FOR GB AND VX CAMPAIGN. THREE CAMS OPERATING FOR H CAMPAIGN.
8. MP-MWS-0104 IS THE COMMON SPARE FOR MP-MWS-0102 AND MP-MWS-0103.
9. THREE WAY VALVE IS UNDER TIMER CONTROL TO SWITCH BETWEEN DRAINED AGENT LINE AND AGENT WASHOUT LINE. RESPECTIVE PUMPS ARE TURNED ON AND OFF PRIOR TO AND FOLLOWING THE VALVE SWITCHING. HIGH PRESSURE RINSE WATER VALVE IS TURNED ON WHEN THE THREE-WAY VALVE SWITCHES TO THE AGENT WASHOUT LINE AND CLOSED AFTER A PRESET VOLUME OF RINSE WATER.
10. MV-SDS-0301 IS USED TO STORE AGENT WASHOUT SOLUTION DURING OPERATION.
11. PROCESS CHILLED WATER IS USED TO MAINTAIN WASH WATER TEMPERATURE LOWER THAN 80° F. COOLING COIL DUTY IS 140,000 BTU/HR.
12. 30 DEGREE TEMPERATURE DIFFERENTIAL SHALL BE MAINTAINED.
13. PROVISION SHALL BE MADE FOR INSTALLING DISCHARGE STRAINERS FOR GB CAMPAIGN. FOR VX AND H CAMPAIGNS, DISCHARGE STRAINERS WILL BE REPLACED BY SPOOL PIECE FOR CONNECTIONS.

THIS DRAWING SUPERSEDES DRAWING 24915-07-M5-TMW-00001

NO.	DATE	DESCRIPTION	DR	CK	DL	PE	APPD
1	10-5-04	ISSUED FOR DESIGN (IFD)	PC	NI	SH	JB	JU
0	6-11-04	ISSUED FOR DESIGN (IFD)	PC	NI	SH	JB	JU

QUALITY ☒ LEVEL 1 ☐ LEVEL 2 ☐ LEVEL 3 ☐ ALL

BECHTEL PARSONS BLUE GRASS
A Joint Venture of Bechtel National, INC. and Parsons Infrastructure & Technology Group Inc.

DOD PROGRAM MANAGER FOR ASSEMBLED CHEMICAL WEAPONS ASSESSMENT EDGEWOOD, MARYLAND

US ARMY ENGINEERING AND SUPPORT CENTER, HUNTSVILLE HUNTSVILLE, ALABAMA

BLUE GRASS CHEMICAL AGENT DESTRUCTION PILOT PLANT PROJECT (BGCAPP)
RICHMOND, KENTUCKY

CONTRACT NO. DAAA09-03-D-0023

MUNITIONS DEMILITARIZATION BUILDING MUNITIONS WASHOUT SYSTEM PROCESS FLOW DIAGRAM

PROFESSIONAL STAMP

DRAWING NUMBER 24915-07-M5-MWS-00001 | SHEET 1 OF 3 | REV 1

07-M5-MWS-1-1.PFZ BGCAPP_E2.BDR

DESIGN FILE: DGNSPEC$$$
PLOTTED BY: USER$ ON DATE$$$$$$$$ AT SYTIME USING COLOR$$

S:\2D\pr\07-M5-MWS-1-1.pfz 10/07/2004 10:28:15 AM

MATERIAL BALANCE TABLE FOR PFD: 24915-07-M5-MWS-00001
MUNITIONS WASHOUT SYSTEM - CASE AGENT GB PROCESSING
2 WT% AGENT HEEL TO MPT

PEAK CASE

STREAM NUMBER	121	201	202	203	204	205	206	207	912
DESCRIPTION	GB PROJECTILES FROM NCR	DEMIN WATER TO CAMS	DRAINED AGENT TO AGENT HOLDING TANK	AGENT WASHOUT TO SPENT DECON HOLDING TANK	MUNITIONS BODIES TO MPT	VENT TO VENT GAS HEATER	ROOM AIR	VENT TO HVAC FILTER	DEMIN WATER TO WASHOUT STORAGE TANK
TEMPERATURE, °F	77	110	77	108	77	77	77	107	77
PRESSURE, PSIA		10014.23	28.23	27.23		14.23	14.23	14.05	74.23
MUNITIONS/ HOUR	15				15				
INSTANTANEOUS FLOW, GPM/ (ACFM)		9.00	4.00	10.00		(1140)	(1140)	(1180)	9.00
DENSITY, LB/FT3		63.61	67.97	62.41		0.071	0.071	0.066	62.24
VISCOSITY, cP		0.62	1.50	0.96		0.01	0.01	0.01	0.89
MOLECULAR WEIGHT	-	-	-	-	-	28.61	28.61	28.61	-
ENTHALPY, MMBTU/HR	-	-	-	-	-	-		-	-
COMPONENT FLOWS, LB/HR									
GB	217.50		174.00	39.15	4.35				
VX									
H									
WATER		1148.0		1148.0		68.62	68.62	68.62	1148.0
STEEL	2624.3				2624.3				
NITROGEN (VAPOR)						3643.3	3643.3	3643.3	
OXYGEN (VAPOR)						1106.7	1106.7	1106.7	
HYDROGEN (VAPOR)									
CARBON DIOXIDE (VAPOR)						2.39	2.39	2.39	
ETHANE (VAPOR)	TRACE					TRACE		TRACE	
VOCs (VAPOR)	TRACE					TRACE		TRACE	
TOTAL PEAK, LB/HR	2841.8	1148.0	174.00	1187.1	2628.7	4820.9	4820.9	4820.9	1148.0
AVG THROUGHPUT, LB/HR	2065.0	834.18	126.44	862.63	1910.2	4820.9	4820.9	4820.9	834.18
NOTES		1, 4							5

MATERIAL BALANCE TABLE FOR PFD: 24915-07-M5-MWS-00001
MUNITIONS WASHOUT SYSTEM - CASE AGENT VX PROCESSING
2 WT% AGENT HEEL TO MPT

PEAK CASE

1 2

STREAM NUMBER	121	201	202	203	204	205	206	207	912
DESCRIPTION	VX PROJECTILES FROM NCR	DEMIN WATER TO CAMS	DRAINED AGENT TO AGENT HOLDING TANK	AGENT WASHOUT TO SPENT DECON HOLDING TANK	MUNITIONS BODIES TO MPT	VENT TO VENT GAS HEATER	ROOM AIR	VENT TO HVAC FILTER	DEMIN WATER TO WASHOUT STORAGE TANK
TEMPERATURE, °F	77	110	77	108	77	77	77	107	77
PRESSURE, PSIA		10014.23	28.23	27.23		14.23	14.23	14.05	74.23
MUNITIONS/ HOUR	26				26				
INSTANTANEOUS FLOW, GPM/ (ACFM)		9.00	4.00	9.00		(1140)	(1140)	(1180)	9.00
DENSITY, LB/FT3		63.61	64.69	62.24		0.071	0.071	0.066	62.24
VISCOSITY, cP		0.62	10.00	0.96		0.01	0.01	0.01	0.89
MOLECULAR WEIGHT	-	-	-	-	-	28.61	28.61	28.61	-
ENTHALPY, MMBTU/HR	-	-	-	-	-	-		-	-
COMPONENT FLOWS, LB/HR									
GB									
VX	156.00		149.76	3.12	3.12				
H									
WATER		1492.4		1492.4		68.62	68.62	68.62	1492.4
STEEL	2353.0				2353.0				
NITROGEN (VAPOR)						3643.3	3643.3	3643.3	
OXYGEN (VAPOR)						1106.7	1106.7	1106.7	
HYDROGEN (VAPOR)									
CARBON DIOXIDE (VAPOR)						2.39	2.39	2.39	
ETHANE (VAPOR)	TRACE					TRACE		TRACE	
VOCs (VAPOR)	TRACE					TRACE		TRACE	
TOTAL PEAK, LB/HR	2509.0	1492.4	149.76	1495.5	2356.1	4820.9	4820.9	4820.9	1492.4
AVG THROUGHPUT, LB/HR	1833.5	1090.6	109.44	1092.8	1721.8	4820.9	4820.9	4820.9	1090.6
NOTES		1, 6							5

MATERIAL BALANCE TABLE FOR PFD: 24915-07-M5-MWS-00001
MUNITIONS WASHOUT SYSTEM - CASE AGENT H PROCESSING
2 WT% AGENT HEEL TO MPT

PEAK CASE

STREAM NUMBER	115	201	202	203	204	205	206	207	912
DESCRIPTION	H PROJECTILES FROM PMD	DEMIN WATER TO CAMS	DRAINED AGENT TO AGENT HOLDING TANK	AGENT WASHOUT TO SPENT DECON HOLDING TANK	MUNITIONS BODIES TO MPT	VENT TO VENT GAS HEATER	ROOM AIR	VENT TO HVAC FILTER	DEMIN WATER TO WASHOUT STORAGE TANK
TEMPERATURE, °F	77	110	77	108	77	77	77	107	77
PRESSURE, PSIA		10014.23	28.23	27.23		14.23	14.23	14.05	74.23
MUNITIONS/ HOUR	26				26				
INSTANTANEOUS FLOW, GPM/ (ACFM)		13.50	4.00	16.00		(1140)	(1140)	(1180)	13.50
DENSITY, LB/FT3		63.61	80.20	63.17		0.071	0.071	0.066	62.24
VISCOSITY, cP		0.62	5.80	0.91		0.01	0.01	0.01	0.89
MOLECULAR WEIGHT	-	-	-	-	-	28.61	28.61	28.61	-
ENTHALPY, MMBTU/HR	-	-	-	-	-	-		-	-
COMPONENT FLOWS, LB/HR									
GB									
VX									
H	304.20		88.22	209.90	6.08	0.001		0.001	
WATER		2984.7		2984.7		68.62	68.62	68.62	2984.7
STEEL	2142.9				2142.9				
NITROGEN (VAPOR)						3643.3	3643.3	3643.3	
OXYGEN (VAPOR)						1106.7	1106.7	1106.7	
HYDROGEN (VAPOR)	0.021					0.021		0.021	
CARBON DIOXIDE (VAPOR)						2.39	2.39	2.39	
ETHANE (VAPOR)	0.002					0.002		0.002	
VOCs (VAPOR)	0.002					0.002		0.002	
TOTAL PEAK, LB/HR	2447.1	2984.7	88.22	3194.6	2149.0	4821.0	4820.9	4821.0	2984.7
AVG THROUGHPUT, LB/HR	1609.5	1963.0	58.02	2101.1	1413.4	4821.0	4820.9	4821.0	1963.0
NOTES		7, 8							8

NOTES:

1. INSTANTANEOUS FLOWS ARE BASED ON 2 CAMS OPERATING SIMULTANEOUSLY.
2. DELETED
3. DELETED
4. WASH TIME FOR GB PROJECTILE IS 2 MINUTES PER PROJECTILE FOR MWS.
5. DEMINERALIZED WATER SUPPLIES TO TWO CAMS.
6. WASH TIME FOR VX PROJECTILE IS 1.5 MINUTES PER PROJECTILE FOR MWS.
7. WASH TIME FOR H PROJECTILE IS 3 MINUTES PER PROJECTILE FOR MWS.
8. INSTANTANEOUS FLOWS ARE BASED ON THREE CAMS OPERATING SIMULTANEOUSLY. (1 1)

THIS DRAWING SUPERSEDES DRAWING 24915-07-M5-TMW-00001

NO.	DATE	DESCRIPTION	DR	CK	DL	PE	APPD
1	10-5-04	ISSUED FOR DESIGN (IFD)	PC	NI	SH	JB	JU
0	6-11-04	ISSUED FOR DESIGN (IFD)	PC	NI	SH	JB	JU

QUALITY ☒ LEVEL 1 ☐ LEVEL 2 ☐ LEVEL 3 ☐ ALL

BECHTEL PARSONS BLUE GRASS
A Joint Venture of Bechtel National, INC. and Parsons Infrastructure & Technology Group Inc.

DOD PROGRAM MANAGER FOR ASSEMBLED CHEMICAL WEAPONS ASSESSMENT EDGEWOOD, MARYLAND

US ARMY ENGINEERING AND SUPPORT CENTER, HUNTSVILLE HUNTSVILLE, ALABAMA

BLUE GRASS CHEMICAL AGENT DESTRUCTION PILOT PLANT PROJECT (BGCAPP)
RICHMOND, KENTUCKY

CONTRACT NO. DAAA09-03-D-0023

MUNITIONS DEMILITARIZATION BUILDING MUNITIONS WASHOUT SYSTEM PROCESS FLOW DIAGRAM

DRAWING NUMBER 24915-07-M5-MWS-00001 SHEET 2 OF 3 REV 1

PROFESSIONAL STAMP

07-M5-MWS-1-2.PFZ BGCAPP_E2.BDR

DESIGN FILE: DGNSPEC$$
PLOTTED BY: USER$ ON DATE$$$$$$$$ AT SYTIME USING COLOR$$

S:\2D\pr\07-M5-MWS-1-2.pfz 10/05/2004 05:01:59 PM

MATERIAL BALANCE TABLE FOR PFD: 24915-07-M5-MWS-00001
MUNITIONS WASHOUT SYSTEM - CASE AGENT GB PROCESSING
0 WT% AGENT HEEL TO MPT

PEAK CASE

STREAM NUMBER	121	201	202	203	204	205	206	207	912
DESCRIPTION	GB PROJECTILES FROM NCR	DEMIN WATER TO CAMS	DRAINED AGENT TO AGENT HOLDING TANK	AGENT WASHOUT TO SPENT DECON HOLDING TANK	MUNITIONS BODIES TO MPT	VENT TO VENT GAS HEATER	ROOM AIR	VENT TO HVAC FILTER	DEMIN WATER TO WASHOUT STORAGE TANK
TEMPERATURE, °F	77	110	77	108	77	77	77	107	77
PRESSURE, PSIA		10014.23	28.23	27.23		14.23	14.23	14.05	74.23
MUNITIONS/ HOUR	15				15				
INSTANTANEOUS FLOW, GPM/ (ACFM)		9.00	4.00	10.00		(1140)	(1140)	(1180)	9.00
DENSITY, LB/FT3		63.61	67.97	62.43		0.071	0.071	0.066	62.24
VISCOSITY, cP		0.62	1.50	0.96		0.01	0.01	0.01	0.89
MOLECULAR WEIGHT	-	-	-	-	-	28.61	28.61	28.61	-
ENTHALPY, MMBTU/HR	-	-	-	-	-	-		-	-
COMPONENT FLOWS, LB/HR									
GB	217.50		174.00	43.50					
VX									
H									
WATER		1148.0		1148.0		68.62	68.62	68.62	1148.0
STEEL	2624.3				2624.3				
NITROGEN (VAPOR)						3643.3	3643.3	3643.3	
OXYGEN (VAPOR)						1106.7	1106.7	1106.7	
HYDROGEN (VAPOR)									
CARBON DIOXIDE (VAPOR)						2.39	2.39	2.39	
ETHANE (VAPOR)	TRACE					TRACE		TRACE	
VOCs (VAPOR)	TRACE					TRACE		TRACE	
TOTAL PEAK, LB/HR	2841.8	1148.0	174.00	1191.5	2624.3	4820.9	4820.9	4820.9	1148.0
AVG THROUGHPUT, LB/HR	2065.0	834.18	126.44	865.79	1907.0	4820.9	4820.9	4820.9	834.18
NOTES		1, 4							5

MATERIAL BALANCE TABLE FOR PFD: 24915-07-M5-MWS-00001
MUNITIONS WASHOUT SYSTEM - CASE AGENT VX PROCESSING
0 WT% AGENT HEEL TO MPT

PEAK CASE

STREAM NUMBER	121	201	202	203	204	205	206	207	912
DESCRIPTION	VX PROJECTILES FROM NCR	DEMIN WATER TO CAMS	DRAINED AGENT TO AGENT HOLDING TANK	AGENT WASHOUT TO SPENT DECON HOLDING TANK	MUNITIONS BODIES TO MPT	VENT TO VENT GAS HEATER	ROOM AIR	VENT TO HVAC FILTER	DEMIN WATER TO WASHOUT STORAGE TANK
TEMPERATURE, °F	77	110	77	108	77	77	77	107	77
PRESSURE, PSIA		10014.23	28.23	27.23		14.23	14.23	14.05	74.23
MUNITIONS/ HOUR	26				26				
INSTANTANEOUS FLOW, GPM/ (ACFM)		9.00	4.00	9.00		(1140)	(1140)	(1180)	9.00
DENSITY, LB/FT3		63.61	64.69	62.25		0.071	0.071	0.066	62.24
VISCOSITY, cP		0.62	10.00	0.96		0.01	0.01	0.01	0.89
MOLECULAR WEIGHT	-	-	-	-	-	28.61	28.61	28.61	-
ENTHALPY, MMBTU/HR	-	-	-	-	-	-		-	-
COMPONENT FLOWS, LB/HR									
GB									
VX	156.00		149.76	6.24					
H									
WATER		1492.4		1492.4		68.62	68.62	68.62	1492.4
STEEL	2353.0				2353.0				
NITROGEN (VAPOR)						3643.3	3643.3	3643.3	
OXYGEN (VAPOR)						1106.7	1106.7	1106.7	
HYDROGEN (VAPOR)									
CARBON DIOXIDE (VAPOR)						2.39	2.39	2.39	
ETHANE (VAPOR)	TRACE					TRACE		TRACE	
VOCs (VAPOR)	TRACE					TRACE		TRACE	
TOTAL PEAK, LB/HR	2509.0	1492.4	149.76	1498.6	2353.0	4820.9	4820.9	4820.9	1492.4
AVG THROUGHPUT, LB/HR	1833.5	1090.6	109.44	1095.1	1719.5	4820.9	4820.9	4820.9	1090.6
NOTES		1, 6							5

MATERIAL BALANCE TABLE FOR PFD: 24915-07-M5-MWS-00001
MUNITIONS WASHOUT SYSTEM - CASE AGENT H PROCESSING
0 WT% AGENT HEEL TO MPT

PEAK CASE

STREAM NUMBER	115	201	202	203	204	205	206	207	912
DESCRIPTION	H PROJECTILES FROM PMD	DEMIN WATER TO CAMS	DRAINED AGENT TO AGENT HOLDING TANK	AGENT WASHOUT TO SPENT DECON HOLDING TANK	MUNITIONS BODIES TO MPT	VENT TO VENT GAS HEATER	ROOM AIR	VENT TO HVAC FILTER	DEMIN WATER TO WASHOUT STORAGE TANK
TEMPERATURE, °F	77	110	77	108	77	77	77	107	77
PRESSURE, PSIA		10014.23	28.23	27.23		14.23	14.23	14.05	74.23
MUNITIONS/ HOUR	26				26				
INSTANTANEOUS FLOW, GPM/ (ACFM)		13.50	4.00	16.00		(1140)	(1140)	(1180)	13.50
DENSITY, LB/FT3		63.61	80.20	63.19		0.071	0.071	0.066	62.24
VISCOSITY, cP		0.62	5.80	0.91		0.01	0.01	0.01	0.89
MOLECULAR WEIGHT	-	-	-	-	-	28.61	28.61	28.61	-
ENTHALPY, MMBTU/HR	-	-	-	-	-	-		-	-
COMPONENT FLOWS, LB/HR									
GB									
VX									
H	304.20		88.22	215.98		0.001		0.001	
WATER		2984.7		2984.7		68.62	68.62	68.62	2984.7
STEEL	2142.9				2142.9				
NITROGEN (VAPOR)						3643.3	3643.3	3643.3	
OXYGEN (VAPOR)						1106.7	1106.7	1106.7	
HYDROGEN (VAPOR)	0.021					0.021		0.021	
CARBON DIOXIDE (VAPOR)						2.39	2.39	2.39	
ETHANE (VAPOR)	0.002					0.002		0.002	
VOCs (VAPOR)	0.002					0.002		0.002	
TOTAL PEAK, LB/HR	2447.1	2984.7	88.22	3200.7	2142.9	4821.0	4820.9	4821.0	2984.7
AVG THROUGHPUT, LB/HR	1609.5	1963.0	58.02	2105.1	1409.4	4821.0	4820.9	4821.0	1963.0
NOTES		7, 8							8

NOTES:

1. INSTANTANEOUS FLOWS ARE BASED ON 2 CAMS OPERATING SIMULTANEOUSLY.
2. DELETED
3. DELETED
4. WASH TIME FOR GB PROJECTILE IS 2 MINUTES PER PROJECTILE FOR MWS.
5. DEMINERALIZED WATER SUPPLIES TO TWO CAMS.
6. WASH TIME FOR VX PROJECTILE IS 1.5 MINUTES PER PROJECTILE FOR MWS.
7. WASH TIME FOR H PROJECTILE IS 3 MINUTES PER PROJECTILE FOR MWS.
8. INSTANTANEOUS FLOWS ARE BASED ON THREE CAMS OPERATING SIMULTANEOUSLY.

THIS DRAWING SUPERSEDES DRAWING 24915-07-M5-TMW-00001

NO.	DATE	DESCRIPTION	DR	CK	DL	PE	APPD
1	10-5-04	ISSUED FOR DESIGN (IFD)	PC	NI	SH	JB	JU
0	6-11-04	ISSUED FOR DESIGN (IFD)	PC	NI	SH	JB	JU

QUALITY ☒ LEVEL 1 ☐ LEVEL 2 ☐ LEVEL 3 ☐ ALL

BECHTEL PARSONS BLUE GRASS
A Joint Venture of Bechtel National, INC. and Parsons Infrastructure & Technology Group Inc.

DOD PROGRAM MANAGER FOR ASSEMBLED CHEMICAL WEAPONS ASSESSMENT EDGEWOOD, MARYLAND

US ARMY ENGINEERING AND SUPPORT CENTER, HUNTSVILLE HUNTSVILLE, ALABAMA

BLUE GRASS CHEMICAL AGENT DESTRUCTION PILOT PLANT PROJECT (BGCAPP)
RICHMOND, KENTUCKY

CONTRACT NO. DAAA09-03-D-0023

MUNITIONS DEMILITARIZATION BUILDING MUNITIONS WASHOUT SYSTEM PROCESS FLOW DIAGRAM

PROFESSIONAL STAMP

DRAWING NUMBER 24915-07-M5-MWS-00001 SHEET 3 OF 3 REV 1

07-M5-MWS-1-3.PFZ BGCAPP_E2.BDR

DESIGN FILE: DGNSPEC$$$$ PLOTTED BY: USER$ ON DATE$$$ AT SYTIME USING COLOR$$$

MY-NCR-0101
NOSE CLOSURE
REMOVAL STATION

MJ-PHS-0107
NCR PROJECTILE
TRANSFER ROBOT

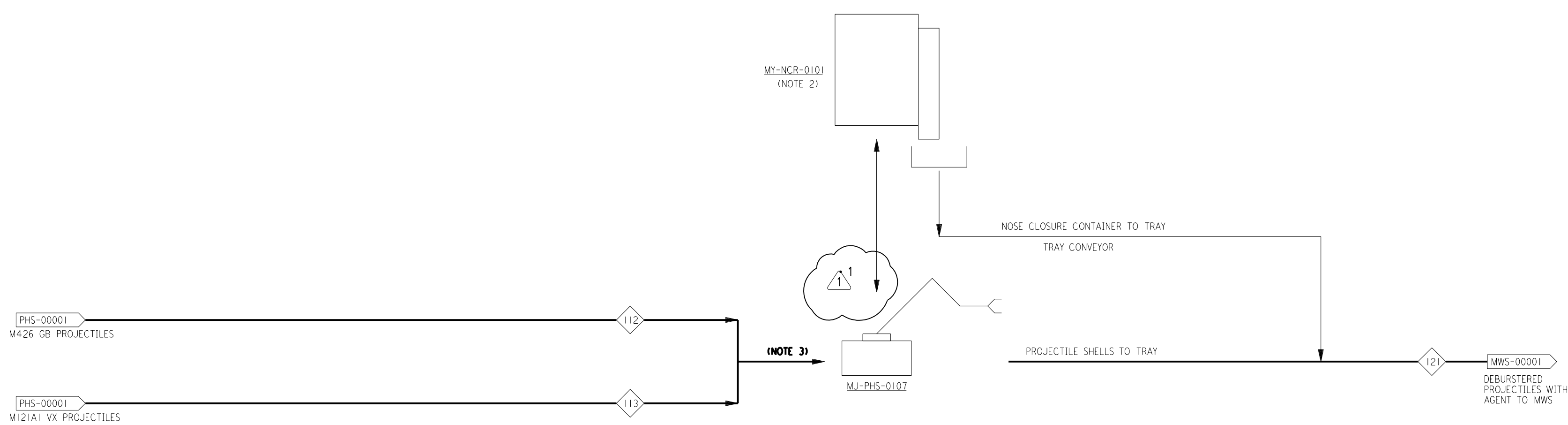

NOTES:

1. FOR SYMBOL DEFINITION SEE DRAWING 24915-00-M5-00-00002.
2. THE NCR STATION WILL REQUIRE MINOR RETOOLING BETWEEN GB AND VX CAMPAIGNS.
3. EACH TYPE OF PROJECTILE WILL BE DEMILITARIZED IN A SEPARATE CAMPAIGN.

THIS DRAWING SUPERSEDES DRAWING 24915-07-M5-HHP-00002

NO.	DATE	DESCRIPTION	DR	CK	DL	PE	APPD
1	9-30-04	ISSUED FOR DESIGN (IFD)	PC	NI	SH	JB	JU
0	6-11-04	ISSUED FOR DESIGN (IFD)	PC	NI	SH	JB	JU

QUALITY ☐ LEVEL 1 ☐ LEVEL 2 ☒ LEVEL 3 ☐ ALL

BECHTEL PARSONS BLUE GRASS
A Joint Venture of Bechtel National, INC. and Parsons Infrastructure & Technology Group Inc.

DOD PROGRAM MANAGER FOR ASSEMBLED CHEMICAL WEAPONS ASSESSMENT EDGEWOOD, MARYLAND

US ARMY ENGINEERING AND SUPPORT CENTER, HUNTSVILLE HUNTSVILLE, ALABAMA

BLUE GRASS CHEMICAL AGENT DESTRUCTION PILOT PLANT PROJECT (BGCAPP)
RICHMOND, KENTUCKY

CONTRACT NO. DAAA09-03-D-0023

MUNITIONS DEMILITARIZATION BUILDING NOSE CLOSURE REMOVAL SYSTEM PROCESS FLOW DIAGRAM

PROFESSIONAL STAMP

DRAWING NUMBER 24915-07-M5-NCR-00001 SHEET 1 OF 2 REV 1

07-M5-NCR-1-1.PFZ BGCAPP_E2.BDR

MATERIAL BALANCE TABLE FOR PFD: 24915-07-M5-NCR-00001
NOSE CLOSURE REMOVAL SYSTEM: CASE AGENT GB CO-PROCESSING / CASE AGENT VX CO-PROCESSING

STREAM NUMBER	112	113	121A	121B
DESCRIPTION	GB PROJECTILES	VX PROJECTILES	GB PROJECTILES W/ AGENT TO MWS	VX PROJECTILES W/ AGENT TO MWS
TEMPERATURE, F	77	77	77	77
PRESSURE, PSIA				
MUNITIONS/ HOUR	15	26	15	26
GPM, INSTANTANEOUS FLOW	-	-	-	-
DENSITY, LB/FT3	-	-	-	-
VISCOSITY, cP	-	-	-	-
MOLECULAR WEIGHT	-	-	-	-
ENTHALPY, MMBTU/HR	-	-	-	-
COMPONENT FLOWS, LB/HR				
GB	217.50		217.50	
VX		156.00		156.00
STEEL	2624.3	2353.0	2624.3	2353.0
ETHANE (VAPOR)	TRACE	TRACE	TRACE	TRACE
VOCs (VAPOR)	TRACE	TRACE	TRACE	TRACE
TOTAL PEAK, LB/HR	2841.8	2509.0	2841.8	2509.0
AVG THROUGHPUT, LB/HR	2065.0	1833.5	2065.0	1833.5
NOTES	1	1	2, 4	3, 4

NOTES:

1. EACH TYPE OF PROJECTILE WILL BE DEMILITARIZED IN A SEPARATE CAMPAIGN.
2. STREAM 121A IS DEDICATED FOR M426 GB PROJECTILE.
3. STREAM 121B IS DEDICATED FOR M121A1 VX PROJECTILE.
4. NOSE CLOSURE IS MADE OF STEEL AND WEIGHS 1.75 LB/MUNITION. NOSE CLOSURE STATION REMOVES THE LIFTING PLUGS AND PUTS THEM ONTO THE NOSE CLOSURE CONTAINER LOCATED ON THE TRAY.

THIS DRAWING SUPERSEDES DRAWING 24915-07-M5-HHP-00002

NO.	DATE	DESCRIPTION	DR	CK	DL	PE	APPD
1	10-5-04	ISSUED FOR DESIGN (IFD)	PC	NI	SH	JB	JU
0	6-11-04	ISSUED FOR DESIGN (IFD)	PC	NI	SH	JB	JU

QUALITY: ☐ LEVEL 1 ☐ LEVEL 2 ☒ LEVEL 3 ☐ ALL

BECHTEL PARSONS BLUE GRASS
A Joint Venture of Bechtel National, INC. and Parsons Infrastructure & Technology Group Inc.

DOD PROGRAM MANAGER FOR ASSEMBLED CHEMICAL WEAPONS ASSESSMENT EDGEWOOD, MARYLAND

US ARMY ENGINEERING AND SUPPORT CENTER, HUNTSVILLE HUNTSVILLE, ALABAMA

BLUE GRASS CHEMICAL AGENT DESTRUCTION PILOT PLANT PROJECT (BGCAPP)
RICHMOND, KENTUCKY

CONTRACT NO. DAAA09-03-D-0023

MUNITIONS DEMILITARIZATION BUILDING NOSE CLOSURE REMOVAL SYSTEM PROCESS FLOW DIAGRAM

PROFESSIONAL STAMP

DRAWING NUMBER 24915-07-M5-NCR-00001 | SHEET 2 OF 2 | REV 1

07-M5-NCR-1-2.PFZ BGCAPP_E2.BDR

DESIGN FILE: DGNSPEC$$
PLOTTED BY: USER$ ON DATE$$$$$$$ AT SYTIME USING COLOR$$

MK-OTE-0104/0204 HDC FLUE GAS VENTURI 2'-4" ID X 5'-4" H

MV-OTE-0104/0204 HDC FLUE GAS SEPARATOR 1'-6" ID X 4'-9" H

MK-OTE-0105/0205 HDC FLUE GAS PRE-CATALYTIC TREATMENT UNIT 3'-9" OD X 20'-0" H

ME-OTE-0101/0201 HDC FLUE GAS HEATER 0.30 MMBTU/HR

ME-OTE-0102/0202 AIR HEATER 0.48 MMBTU/HR

MK-OTE-0101/0201 HDC FLUE GAS CATOX UNIT 1'-8" H X 1'-8" W X 1'-9" L (NOTE 15)

MK-OTE-0102/0202 EBH VENTURI 6'-0" ID X 13'-0" H (NOTE 15)

MK-OTE-0103/0203 EBH SCRUBBER TOWER 10'-0" X 11'-6" ID X 32'-2" T/T (NOTE 15)

MA-OTE-0101A/B/C MA-OTE-0201A/B EBH BLOWER AND SPARE TOTAL: 30,356 ACFM TOTAL: 663 BHP (NOTE 12)

ME-OTE-0103/0203 EBH SCRUBBER RECIRCULATION COOLER 1.27 MMBTU/HR

ME-OTE-0105/0205 EBH SCRUBBER RECIRCULATION TRIM COOLER 5.5 MMBTU/HR

MK-OTE-0104A/B MK-OTE-0204 EBH OFFGAS FILTERS (NOTE 3)

MP-OTE-0101A/B/C MP-OTE-0201A/B/C EBH SCRUBBER RECIRCULATION PUMP & SPARE 327 GPM EA.

ME-OTE-0104/0204 AIR REHEATER 1.80 MMBTU/HR

MP-OTE-0102A/B MP-OTE-0202A/B HDC FLUE GAS CONDENSATE PUMP & SPARE 3.18 GPM

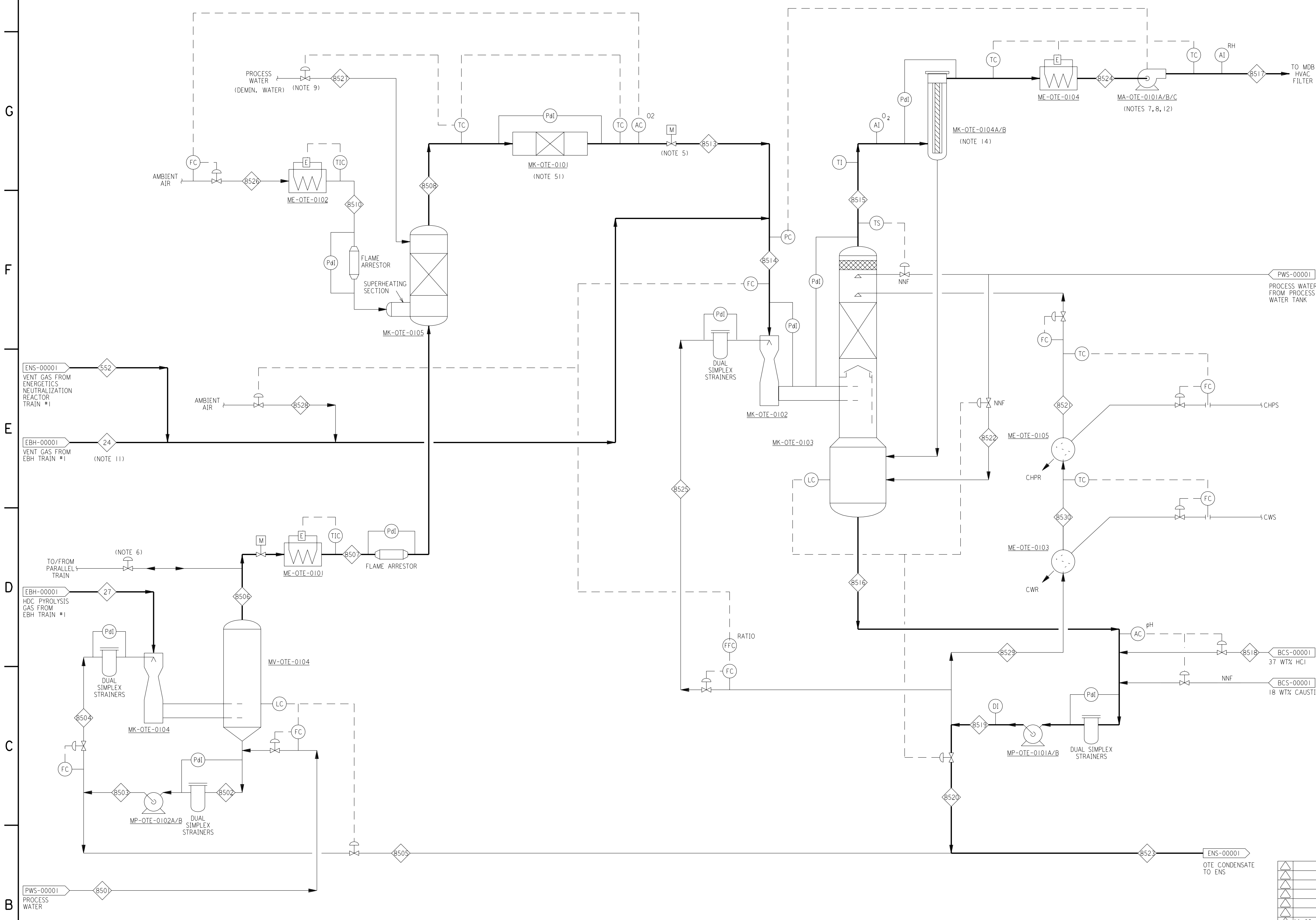

NOTES:

1. FOR SYMBOL DEFINITION SEE DRAWINGS 24915-00-M5-00-00002.
2. DELETED
3. FILTERS TO BE SIZED FOR REMOVAL OF PARTICLES GREATER THAN 0.5 MICRONS.
4. PROVIDE BOOT WITH LEVEL CONTROL AT THE CONDENSER.
5. VALVES ARE PROVIDED FOR ISOLATION.
6. FOR EMERGENCY USE ONLY.
7. VARIABLE SPEED DRIVE.
8. EMERGENCY POWER SUPPLY.
9. PROVIDE FINE MIST, NOT A DELUGE SYSTEM.
10. DELETED
11. LINE IS HEAT TRACED TO MAINTAIN A TEMPERATURE OF 230 °F.
12. TWO 50% CAPACITY BLOWERS PER TRAIN TO BE PROVIDED. MA-OTE-0101C IS A 50% COMMON SPARE FOR BOTH TRAINS.
13. FOR H CAMPAIGN ONLY.
14. THERE WILL BE THREE FILTERS FOR TWO TRAINS. MK-OTE-0104B IS A COMMON SPARE FOR MK-OTE-0104A AND MK-OTE-0204.
15. DIMENSIONS ARE PRELIMINARY. FINAL DIMENSIONS TO BE VERIFIED BY VENDOR.
16. DIMENSIONS ARE PRELIMINARY. FINAL DIMENSIONS TO BE VERIFIED BY VENDOR. CATOX UNITS SHALL BE INSTALLED WITH FLANGE CONNECTIONS SO THAT THEY CAN BE REPLACED WITH FRESH CAYALYST WHENEVER REQUIRED.

THIS DRAWING SUPERSEDES DRAWING 24915-07-M5-QGE-00001

NO.	DATE	DESCRIPTION	DR	CK	DL	PE	APPD
1	11-02-04	ISSUED FOR DESIGN (IFD) SHEET REDRAWN	WW	NI	SH	JB	JU
0	7-2-04	ISSUED FOR DESIGN (IFD)	WW	NI	SH	JB	JU

QUALITY ☐ LEVEL 1 ☒ LEVEL 2 ☐ LEVEL 3 ☐ ALL

BECHTEL PARSONS BLUE GRASS — A Joint Venture of Bechtel National, INC. and Parsons Infrastructure & Technology Group Inc.

DOD PROGRAM MANAGER FOR ASSEMBLED CHEMICAL WEAPONS ASSESSMENT EDGEWOOD, MARYLAND

US ARMY ENGINEERING AND SUPPORT CENTER, HUNTSVILLE HUNTSVILLE, ALABAMA

BLUE GRASS CHEMICAL AGENT DESTRUCTION PILOT PLANT PROJECT (BGCAPP)
RICHMOND, KENTUCKY

CONTRACT NO. DAAA09-03-D-0023

MUNITIONS DEMILITARIZATION BUILDING OFFGAS TREATMENT EBH/ENR PROCESS FLOW DIAGRAM

PROFESSIONAL STAMP

DRAWING NUMBER 24915-07-M5-OTE-00001 SHEET 1 OF 4 REV 1

07-M5-OTE-1-1.PFZ BGCAPP_E2.BDR

DESIGN FILE: DGNSPEC$$$$ PLOTTED BY: USER$ ON DATE$$$$ AT SYTIME USING COLOR$$$$

MATERIAL BALANCE TABLE FOR PFD: 24915-07-M5-OTE-00001
OFF GAS TREATMENT EBH/ENS
CASE: AGENT GB CO-PROCESSING PEAK THROUGHPUT

STREAM NUMBER	24	27	552	8501	8502	8503	8504	8505
Description	Total Vent Gas From EBH #1	Pyrolysis Gas From HDC #1	Total Vent Gas From ENR	Fresh Water To HDC Flue Gas Venturi	HDC Flue Gas Separator Bottom Liquid	HDC Flue Gas Condensate Pump Discharge	HDC Flue Gas Venturi Scrubbing Liquid	HDC Flue Gas Venturi Condensate
Temperature, oF	230	1100	220	77	154	154	154	154
Pressure, PSIA	14.23	14.23	30	20	13.87	85	85	85
Instantaneous Volume Flow, GPM (ACFM)	(27164.8)	(465.4)	(5.6)	0.40	3.18	3.07	3.00	0.07
Density, LB/FT^3	0.054	0.026	0.095	62.252	86.438	86.438	86.438	86.438
Viscosity, CP	0.021	0.037	0.018	0.764	6.46	6.46	6.46	6.46
MW	27.916	30.069	22.867					
Enthalpy, MMBTU/HR	-21.641	0.073	-0.073	-1.365	-4.986	-4.985	-4.861	-0.124
Component Flows, LB/HR								
TNT								
TETRYL								
RDX	9.30E-02							
TRIACETIN	5.06E-01							
NITROCELLULOSE	2.00E-03							
NITROGLYCERIN	6.94E-01							
NITRODIPHENYLAMINE	7.00E-03		1.41E-08					
NITROSODIPHENYLAMINE	3.00E-03		1.68E-07					
NITROPHENOL	2.20E-02		4.47E-06					
DIETHYLPHTHALATE	6.50E-02		4.23E-06					
DIMETHYLPHTHALATE	1.00E-01		2.06E-05					
ETHANOL	1.44		1.60E-03					
LEAD STEARATE								
SODIUM STEARATE								
LEAD OXIDE								
O_2	19363.77		6.51E-03					
N_2	63730.31	600.00	18.71		6.95E-02	6.95E-02	6.77E-02	1.73E-03
H_2	23.87	1.00	9.71E-06		6.16E-05	6.16E-05	6.00E-05	1.53E-06
CO_2		10.28	3.74E-03		2.35E-02	2.35E-02	2.29E-02	5.85E-04
CO		11.80	3.05E-05		1.48E-03	1.48E-03	1.45E-03	3.70E-05
NH_3	12.28		8.54E-03					
N_2O	5.54		6.12E-03					
NO			3.49E-08					
NO_2			6.79E-07					
H_2O	4331.43	4.98	12.82	200.00	595.98	595.98	581.14	14.85
NAOH								
HCL								
H_2SO_4								
HCLO								
HNO_3								
NA_2SO_4								
$NANO_2$			1.20E-03					
$NANO_3$			1.38E-03					
NACL								
NACLO								
$NH_4CL(S)$								
$AL(OH)_3$								
SODIUM FORMATE								
SODIUM ACETATE								
GLYCEROL	0.04		9.54E-06					
$NAALO_2$								
METHANE		1.03	3.08E-06		3.94E-04	3.94E-04	3.84E-04	9.82E-06
ETHYLENE		1.06	3.51E-06		1.46E-03	1.46E-03	1.43E-03	3.64E-05
PROPYLENE		7.67E-01	4.77E-06		3.67E-03	3.67E-03	3.58E-03	9.15E-05
ACETONE		1.67E-01	4.66E-06		2.36E-02	2.36E-02	2.30E-02	5.88E-04
BENZENE		8.90E-02	2.36E-06		2.35E-02	2.35E-02	2.29E-02	5.84E-04
1,2-DICHLOROETHANE		1.70E-01	6.80E-06		7.16E-02	7.16E-02	6.98E-02	1.78E-03
ETHYLBENZENE		1.37E-01	3.79E-04		1.58E-01	1.58E-01	1.54E-01	3.93E-03
METHYLENE CHLORIDE								
STYRENE		7.00E-02	5.19E-03		1.20E-01	1.20E-01	1.17E-01	3.00E-03
TOLUENE		1.67E-01	4.14E-06		9.52E-02	9.52E-02	9.29E-02	2.37E-03
2-BUTANONE		2.20E-02	6.30E-07		6.04E-03	6.04E-03	5.89E-03	1.51E-04
XYLENE		4.00E-03	1.00E-07		5.35E-03	5.35E-03	5.22E-03	1.33E-04
CHLOROETHANE		8.30E-02	1.73E-06		3.20E-03	3.20E-03	3.12E-03	7.97E-05
2-HEXANONE		1.00E-03	2.69E-08		1.03E-03	1.03E-03	1.00E-03	2.56E-05
CHLOROFORM								
1,2-DICHLOROPROPANE		2.00E-03	6.48E-08		9.97E-04	9.97E-04	9.72E-04	2.48E-05
VINYL CHLORIDE		2.60E-02	4.44E-07		5.03E-04	5.03E-04	4.91E-04	1.25E-05
PHENOL		8.98E-01	1.13E-04		11.77	11.77	11.48	2.93E-01
BENZOIC ACID		4.64E-01	4.11E-06		17.54	17.54	17.10	4.37E-01
FLUORENE		8.00E-03	2.68E-08		3.10E-01	3.10E-01	3.02E-01	7.72E-03
HEXACHLOROCYCLOPENTADIENE		6.66	1.28E-04		170.40	170.40	166.16	4.24
2-METHYLNAPHTHALENE		5.00E-03	1.01E-07		1.37E-01	1.37E-01	1.33E-01	3.40E-03
2-METHYLPHENOL		1.09E-01	5.32E-06		4.67E-01	4.67E-01	4.56E-01	1.16E-02
4-METHYLPHENOL		6.00E-03	2.55E-07		1.41E-01	1.41E-01	1.38E-01	3.52E-03
NAPHTHALENE		1.53E-01	4.38E-06		2.67	2.67	2.60	6.65E-02
2,4-DIMETHYLPHENOL		2.00E-03	7.09E-08		5.29E-02	5.29E-02	5.16E-02	1.32E-03
BIS(2-CHLOROETHYL)ETHER		2.80E-01	1.15E-05		2.30	2.30	2.25	5.74E-02
METHYLCHLORIDE		8.47E-01	1.65E-05		1.36E-02	1.36E-02	1.32E-02	3.38E-04
ETHYLPHENOL		8.93	3.23E-04		203.48	203.48	198.41	5.07
ISOPROPYLPHENOL		9.96	3.44E-04		83.20	83.20	81.13	2.07
ISOPROPYENYLPHENOL		10.97	5.32E-04		168.88	168.88	164.67	4.21
BISPHENOL A		16.69	2.43E-08		669.87	669.87	653.18	16.69
CYCLOPENTADIENE		2.02E-01	5.29E-06		2.03E-02	2.03E-02	1.98E-02	5.06E-04
METHYLCYCLOPENTADIENE		6.12	1.68E-04		1.37	1.37	1.34	3.42E-02
PROPIONALDEHYDE		3.20E-02	8.58E-07		3.49E-03	3.49E-03	3.40E-03	8.68E-05
ACROLEIN		2.80E-02	8.87E-07		4.04E-03	4.04E-03	3.94E-03	1.01E-04
METHYLACETYLENE		7.59E-01	1.07E-05		8.92E-03	8.92E-03	8.70E-03	2.22E-04
ACETALDEHYDE		8.17	2.05E-04		4.04E-01	4.04E-01	3.94E-01	1.01E-02
ACETIC ACID		2.33	1.35E-04		4.01	4.01	3.91	9.98E-02
FURAN		1.88	4.89E-05		1.35E-01	1.35E-01	1.32E-01	3.37E-03
METHYLFURFURAL		2.82	4.21E-06		112.36	112.36	109.56	2.80
BENZENE DIOL		4.76E-01	6.55E-06		18.34	18.34	17.88	4.57E-01
BENZENE DIOL DIACETATE		9.78E-01	3.52E-05		2.42	2.42	2.36	6.02E-02
BENZENE TRIOL TRIACETATE		1.29	3.38E-07		51.94	51.94	50.65	1.29
CYCLOPENTENONE		2.37E-01	1.14E-05		5.62E-01	5.62E-01	5.48E-01	1.40E-02
PENTENYNE		3.60E-02	5.94E-07		2.40E-03	2.40E-03	2.34E-03	5.99E-05
BUTADIENE		1.20E-01	1.29E-06		1.80E-03	1.80E-03	1.76E-03	4.49E-05
4-NITROPHENOL			3.88E-07					
BUTYLBENZYLPHTHALATE								
BIS(2-ETHYLHEXYL)PHTHALATE								
4-METHYL-3-HEXANOL			2.95E-05					
PHENAZINE			2.37E-08					
TETRADECANOIC ACID			1.14E-08					
1-PHENYL-1H-BENZOTRIAZOLE			2.64E-08					
9-ACRIDINAMINE			3.47E-09					
4,6-DIMETHOXY-2(2H)-BENZOFURANONE			6.31E-08					
BENZALDEHYDE, (PHENYLMETHYLENE)HYDRAZONE			6.85E-09					
HEXADECANOIC ACID			3.27E-08					
OCTADECANOIC ACID			2.67E-08					
THIIRANE			6.27E-03					
1-BUTANOL			1.02E-03					
1-METHYLETHYL-BENZENE			1.43E-04					
DECANE			9.55E-05					
UNDECANE			3.16E-05					
ANILINE			4.25E-05					
2-ETHYL-1-HEXANOL			2.01E-05					
PCB		3.40E-01	3.90E-09		13.65	13.65	13.31	3.40E-01
TOTAL PEAK THROUGHPUT, LB/HR	87470.2	713.6	31.6	200.0	2133.1	2133.1	2079.9	53.1
TOTAL AVERAGE THROUGHPUT, LB/HR	56605.9	672.0	33.7	200.0	641.1	1810.4	1755.1	55.3

STREAM NUMBER	8506	8507	8508	8510	8514	8515	8516	8517	8518
Description	HDC Flue Gas Venturi Overhaed Vapor	Hot HDC Flue Gas To Pre-Catalytic Treatment Unit	CATOX Feed	Hot Air To Pre-Catalytic Treatment Unit	Venturi Scrubber Feed	Scrubber Tower Overhead Vapor	Scrubber Tower Bottom Liquid	EBH Offgas To HVAC Filter Units	37% HCl Solution
Temperature, oF	159	1200	800	800	266	87	105	184	77
Pressure, PSIA	13.87	13.69	12.78	13.87	11.88	11.34	11.43	14.23	20
Instantaneous Volume Flow, GPM (ACFM)	(437.4)	(732.9)	(2700.9)	(1349.2)	(35900.7)	(27328.7)	614.28	(25651.8)	0.11
Density, LB/FT^3	0.033	0.02	0.024	0.03	0.042	0.054	62.287	0.058	74.22
Viscosity, CP	0.035	0.035	0.029	0.035	0.022	0.018	0.591	0.021	1.666
MW	25.468	25.468	25.512	28.82	27.801	28.159		28.159	
Enthalpy, MMBTU/HR	-1.167	-0.874	-4.716	0.422	-26.43	-18.6	-2060.724	-16.433	-0.315
Component Flows, LB/HR									
TNT									
TETRYL									
RDX					9.30E-02		13.23		
TRIACETIN					5.06E-01		71.96		
NITROCELLULOSE					2.00E-03		2.85E-01		
NITROGLYCERIN					6.94E-01		98.71		
NITRODIPHENYLAMINE					7.00E-03		1.00		
NITROSODIPHENYLAMINE					3.00E-03		4.27E-01		
NITROPHENOL					2.20E-02		3.13		
DIETHYLPHTHALATE					6.50E-02		9.25		
DIMETHYLPHTHALATE					1.00E-01		14.22		
ETHANOL					1.44	1.15	41.27	1.15	
LEAD STEARATE									
SODIUM STEARATE									
LEAD OXIDE									
O_2			445.63	544.59	19781.54	19781.54	1.34	19781.54	
N_2	600.00	600.00	2446.58	1846.58	66195.59	66195.58	2.38	66195.58	
H_2	1.00	1.00	0.01		23.87	23.87	1.16E-03	23.87	
CO_2	10.28	10.28	119.80		150.02	150.02	2.28E-01	150.02	
CO	11.79	11.79	1.18E-01		3.05E-05	3.05E-05	1.56E-07	3.05E-05	
NH_3					12.28	1.53E-02	5.84	1.53E-02	
N_2O					5.54	5.54	5.14E-01	5.54	
NO					3.52E-03	3.52E-03	4.99E-06	3.52E-03	
NO_2					1.18E-03	1.16E-03	2.25E-03	1.16E-03	
H_2O	190.13	190.13	882.91	1.50	5235.28	3157.94	301153.27	3157.94	40.01
NAOH									
HCL					2.85				23.50
H_2SO_4									
HCLO					2.03E-04				
HNO_3									
NA_2SO_4									
$NANO_2$					1.20E-03				
$NANO_3$					1.38E-03				
NACL									
NACLO									
$NH_4CL(S)$							5462.17		
$AL(OH)_3$									
SODIUM FORMATE									
SODIUM ACETATE									
GLYCEROL					4.30E-02	1.24E-06	6.12	1.24E-06	
$NAALO_2$									
METHANE	1.03	1.03	1.03E-01		3.08E-06	3.07E-06	1.82E-07	3.07E-06	
ETHYLENE	1.06	1.06	1.06		3.51E-06	3.51E-06	3.81E-07	3.51E-06	
PROPYLENE	7.67E-01	7.67E-01	7.67E-01		4.77E-06	4.76E-06	1.42E-06	4.76E-06	
ACETONE	1.66E-01	1.66E-01	1.66E-01		4.66E-06	4.37E-06	4.07E-05	4.37E-06	
BENZENE	8.84E-02	8.84E-02	8.84E-02		2.36E-06	2.04E-06	4.62E-05	2.04E-06	
1,2-DICHLOROETHANE	1.68E-01	1.68E-01	1.68E-01		6.80E-06	5.68E-06	1.58E-04	5.68E-06	
ETHYLBENZENE	1.33E-01	1.33E-01	1.33E-01		3.79E-04	1.54E-04	3.20E-02	1.54E-04	
METHYLENE CHLORIDE									
STYRENE	6.70E-02	6.70E-02	6.70E-02		5.19E-03	1.70E-03	4.97E-01	1.70E-03	
TOLUENE	1.65E-01	1.65E-01	1.65E-01		4.14E-06	2.72E-06	2.02E-04	2.72E-06	
2-BUTANONE	2.18E-02	2.18E-02	2.18E-02		6.30E-07	5.41E-07	1.28E-05	5.41E-07	
XYLENE	3.87E-03	3.87E-03	3.87E-03		1.00E-07	3.64E-08	9.10E-06	3.64E-08	
CHLOROETHANE	8.29E-02	8.29E-02	8.29E-02		1.73E-06	1.71E-06	3.02E-06	1.71E-06	
2-HEXANONE	9.74E-04	9.74E-04	9.74E-04		2.69E-08	1.19E-08	2.13E-06	1.19E-08	
CHLOROFORM									
1,2-DICHLOROPROPANE	1.98E-03	1.98E-03	1.98E-03		6.48E-08	4.96E-08	2.16E-06	4.96E-08	
VINYL CHLORIDE	2.60E-02	2.60E-02	2.60E-02		4.44E-07	4.42E-07	3.43E-07	4.42E-07	
PHENOL	6.05E-01	6.05E-01	6.05E-01		1.13E-04	5.89E-06	1.52E-02	5.89E-06	
BENZOIC ACID	2.71E-02	2.71E-02	2.71E-02		4.11E-06	3.43E-09	5.84E-04	3.43E-09	
FLUORENE	2.78E-04	2.78E-04	2.78E-04		2.68E-08		3.80E-06		
HEXACHLOROCYCLOPENTADIENE	2.42	2.42	2.42		1.28E-04	8.79E-07	1.81E-02	8.79E-07	
2-METHYLNAPHTHALENE	1.60E-03	1.60E-03	1.60E-03		1.01E-07		1.42E-05		
2-METHYLPHENOL	9.74E-02	9.74E-02	9.74E-02		5.32E-06	1.14E-06	5.95E-04	1.14E-06	
4-METHYLPHENOL	2.48E-03	2.48E-03	2.48E-03		2.55E-07	5.23E-09	3.56E-05	5.23E-09	
NAPHTHALENE	8.65E-02	8.65E-02	8.65E-02		4.38E-06	1.14E-07	6.07E-04	1.14E-07	
2,4-DIMETHYLPHENOL	6.81E-04	6.81E-04	6.81E-04		7.09E-08		9.94E-06		
BIS(2-CHLOROETHYL)ETHER	2.23E-01	2.23E-01	2.23E-01		1.15E-05	8.33E-07	1.52E-03	8.33E-07	
METHYLCHLORIDE	8.47E-01	8.47E-01	8.47E-01		1.65E-05	1.65E-05	8.39E-06	1.65E-05	
ETHYLPHENOL	3.86	3.86	3.86E-01		3.23E-04	5.36E-06	4.52E-02	5.36E-06	
ISOPROPYLPHENOL	7.88	7.88	7.88E-01		3.44E-04	2.14E-05	4.58E-02	2.14E-05	
ISOPROPYENYLPHENOL	6.76	6.76	6.76E-01		5.32E-04	3.43E-05	7.08E-02	3.43E-05	
BISPHENOL A	4.41E-04	4.41E-04	4.41E-04		2.43E-08		3.45E-06		
CYCLOPENTADIENE	2.01E-01	2.01E-01	2.01E-01		5.29E-06	5.11E-06	2.58E-05	5.11E-06	
METHYLCYCLOPENTADIENE	6.09	6.09	6.09E-01		1.68E-04	1.50E-04	2.63E-03	1.50E-04	
PROPIONALDEHYDE	3.19E-02	3.19E-02	3.19E-02		8.58E-07	8.19E-07	5.48E-06	8.19E-07	
ACROLEIN	2.79E-02	2.79E-02	2.79E-02		8.87E-07	8.39E-07	6.82E-06	8.39E-07	
METHYLACETYLENE	7.59E-01	7.59E-01	7.59E-01		1.07E-05	1.06E-05	5.43E-06	1.06E-05	
ACETALDEHYDE	8.16	8.16	8.16E-01		2.05E-04	2.02E-04	4.66E-04	2.02E-04	
ACETIC ACID	2.23	2.23	2.23E-01		1.35E-04	6.75E-05	9.61E-03	6.75E-05	
FURAN	1.87	1.87	1.87E-01		4.89E-05	4.77E-05	1.68E-04	4.77E-05	
METHYLFURFURAL	1.61E-02	1.61E-02	1.61E-02		4.21E-06		5.99E-04		
BENZENE DIOL	1.91E-02	1.91E-02	1.91E-02		6.55E-06	1.59E-08	9.29E-04	1.59E-08	
BENZENE DIOL DIACETATE	9.18E-01	9.18E-01	9.18E-01		3.52E-05	8.44E-06	3.80E-03	8.44E-06	
BENZENE TRIOL TRIACETATE	1.26E-04	1.26E-04	1.26E-04		3.38E-07		4.80E-05		
CYCLOPENTENONE	2.23E-01	2.23E-01	2.23E-01		1.14E-05	4.72E-06	9.51E-04	4.72E-06	
PENTENYNE	3.59E-02	3.59E-02	3.59E-02		5.94E-07	5.73E-07	3.00E-06	5.73E-07	
BUTADIENE	1.20E-01	1.20E-01	1.20E-01		1.29E-06	1.28E-06	1.32E-06	1.28E-06	
4-NITROPHENOL					3.88E-07		5.51E-05		
BUTYLBENZYLPHTHALATE									
BIS(2-ETHYLHEXYL)PHTHALATE									
4-METHYL-3-HEXANOL					2.95E-05	1.39E-06	3.99E-03	1.39E-06	
PHENAZINE					2.37E-08		3.37E-06		
TETRADECANOIC ACID					1.14E-08		1.62E-06		
1-PHENYL-1H-BENZOTRIAZOLE					2.64E-08		3.75E-06		
9-ACRIDINAMINE					3.47E-09		5.12E-07		
4,6-DIMETHOXY-2(2H)-BENZOFURANONE					6.31E-08		8.96E-06		
BENZALDEHYDE, (PHENYLMETHYLENE)HYDRAZONE					6.85E-09		9.74E-07		
HEXADECANOIC ACID					3.27E-08		4.65E-06		
OCTADECANOIC ACID					2.67E-08		3.79E-06		
THIIRANE					6.27E-03	5.91E-03	5.11E-02	5.91E-03	
1-BUTANOL					1.02E-03	3.78E-04	9.12E-02	3.78E-04	
1-METHYLETHYL-BENZENE					1.43E-04	2.64E-05	1.66E-02	2.64E-05	
DECANE					9.55E-05	1.02E-05	1.21E-02	1.02E-05	
UNDECANE					3.16E-05	1.37E-06	4.31E-03	1.37E-06	
ANILINE					4.25E-05	2.50E-06	5.69E-03	2.50E-06	
2-ETHYL-1-HEXANOL					2.01E-05	5.17E-07	2.78E-03	5.17E-07	
PCB	5.88E-07	5.88E-07	5.88E-07		3.90E-09		3.90E-09		
TOTAL PEAK THROUGHPUT, LB/HR	860.5	860.5	3908.3	2392.7	91410.0	89315.7	306886.6	89315.7	63.5
TOTAL AVERAGE THROUGHPUT, LB/HR	816.7	816.7	3149.4	1856.2	59788.9	57174.5	266846.8	57174.5	38.2

STREAM NUMBER	8519	8520	8521	8522	8523	8524	8525	8526	8527	8528	8529	8530
Description	Scrubber Recirculation Pump Discharge	Scrubber Tower Condensate	Cool Recirculation To Scrubber Tower	Makeup Water To Scrubber Tower	Total OTE Condensate Recycled To ENR	EBH Blower Suction	Venturi Scrubbing Liquid	Air Feed To Air Heater	Water Spary To Pre-Catalytic Treatment Unit	Air Feed To Venturi Scrubber	Scrubber Recirculation Liquid To Cooler	Scrubber Recirculation Liquid To Trim Cooler
Temperature, oF	105	105	70		106	120	105	77	77		105	100
Pressure, PSIA	85	85	65		85	10.98	85	14.23	20		85	75
Instantaneous Volume Flow, GPM (ACFM)	614.32	4.32	372.83	NNF	4.40	(29951.5)	235.00	(560.0)	1.74	NNF	375.00	374.65
Density, LB/FT^3	62.296	62.296	62.658		62.66	0.05	62.296	0.071	62.4		62.296	62.354
Viscosity, CP	0.591	0.591	0.813		0.589	0.019	0.591	0.019	1.16		0.591	0.617
MW						28.159		28.82				
Enthalpy, MMBTU/HR	-2060.972	-14.488	-1264.495		-14.613	-17.86	-788.399	-0.009	-4.518		-1258.084	-1258.999
Component Flows, LB/HR												
TNT												
TETRYL												
RDX	13.23	9.30E-02	8.08		9.30E-02		5.06				8.08	8.08
TRIACETIN	71.96	5.06E-01	43.93		5.06E-01		27.53				43.93	43.93
NITROCELLULOSE	2.85E-01	2.00E-03	0.17		2.00E-03		1.09E-01				1.74E-01	1.74E-01
NITROGLYCERIN	98.71	6.94E-01	60.26		6.94E-01		37.76				60.26	60.26
NITRODIPHENYLAMINE	1.00	7.00E-03	0.61		7.00E-03		3.81E-01				6.08E-01	6.08E-01
NITROSODIPHENYLAMINE	4.27E-01	3.00E-03	0.26		3.00E-03		1.63E-01				2.61E-01	2.61E-01
NITROPHENOL	3.13	2.20E-02	1.91		2.20E-02		1.20				1.91	1.91
DIETHYLPHTHALATE	9.25	6.50E-02	5.64		6.50E-02		3.54				5.64	5.64
DIMETHYLPHTHALATE	14.22	1.00E-01	8.68		1.00E-01		5.44				8.68	8.68
ETHANOL	41.27	2.90E-01	25.19		2.90E-01	1.15	15.79				25.19	25.19
LEAD STEARATE												
SODIUM STEARATE												
LEAD OXIDE												
O_2	1.34	9.45E-03	8.21E-01		9.45E-03	19781.54	5.14E-01	544.59			8.21E-01	8.21E-01
N_2	2.38	1.67E-02	1.45		1.85E-02	66195.58	9.11E-01	1846.58			1.45	1.45
H_2	1.16E-03	8.17E-06	7.10E-04		9.71E-06	23.87	4.45E-04				7.10E-04	7.10E-04
CO_2	9.01E-01	6.34E-03	5.50E-01		6.92E-03	150.02	3.45E-01				5.50E-01	5.50E-01
CO	1.56E-07	1.10E-09	9.52E-08		3.70E-05	3.05E-05	5.97E-08				9.52E-08	9.52E-08
NH_3	3.00E-03	2.11E-05	4.89E-04		2.15E-05	1.53E-02	1.15E-03				1.83E-03	1.53E-03
N_2O	5.14E-01	3.61E-03	3.14E-01		3.61E-03	5.54	1.97E-01				3.14E-01	3.14E-01
NO	4.99E-06	3.51E-08	3.04E-06		3.51E-08	3.52E-03	1.91E-06				3.04E-06	3.04E-06
NO_2	2.25E-03	1.58E-05	1.37E-03		1.58E-05	1.16E-03	8.61E-04				1.37E-03	1.37E-03
H_2O	301193.55	2117.35	183858.32		2132.19	3157.94	115217.88	1.50	655.08		183858.32	183858.32
NAOH												
HCL	10.68		6.49		7.29E-02	5.70E-07	4.08E+00				6.49	6.49
H_2SO_4												
HCLO					2.03E-04		1.10E-02				1.76E-02	1.76E-02
HNO_3												
NA_2SO_4												
$NANO_2$												
$NANO_3$												
NACL												
NACLO												
$NH_4CL(S)$	5480.51	38.51	3345.51		38.51		2096.49				3345.51	3345.51
$AL(OH)_3$												
SODIUM FORMATE												
SODIUM ACETATE												
GLYCEROL	6.12	0.04	3.73		4.30E-02	1.24E-06	2.34				3.73	3.73
$NAALO_2$												
METHANE	1.82E-07	1.28E-09	1.11E-07		9.82E-06	3.07E-06	6.97E-08				1.11E-07	1.11E-07
ETHYLENE	3.81E-07	2.68E-09	2.33E-07		3.64E-05	3.51E-06	1.46E-07				2.33E-07	2.33E-07
PROPYLENE	1.42E-06	9.95E-09	8.64E-07		9.15E-05	4.76E-06	5.42E-07				8.64E-07	8.64E-07
ACETONE	4.07E-05	2.86E-07	2.48E-05		5.89E-04	4.37E-06	1.56E-05				2.48E-05	2.48E-05
BENZENE	4.62E-05	3.25E-07	2.82E-05		5.85E-04	2.04E-06	1.77E-05				2.82E-05	2.82E-05
1,2-DICHLOROETHANE	1.58E-04	1.11E-06	9.67E-05		1.78E-03	5.68E-06	6.06E-05				9.67E-05	9.67E-05
ETHYLBENZENE	3.20E-02	2.25E-04	1.95E-02		4.16E-03	1.54E-04	1.22E-02				1.95E-02	1.95E-02
METHYLENE CHLORIDE												
STYRENE	4.97E-01	3.49E-03	3.03E-01		6.49E-03	1.70E-03	1.90E-01				3.03E-01	3.03E-01
TOLUENE	2.02E-04	1.42E-06	1.24E-04		2.37E-03	2.72E-06	7.74E-05				1.24E-04	1.24E-04
2-BUTANONE	1.28E-05	8.98E-08	7.79E-06		1.51E-04	5.41E-07	4.88E-06				7.79E-06	7.79E-06
XYLENE	9.10E-06	6.39E-08	5.55E-06		1.33E-04	3.64E-08	3.48E-06				5.55E-06	5.55E-06
CHLOROETHANE	3.02E-06	2.12E-08	1.84E-06		7.97E-05	1.71E-06	1.15E-06				1.84E-06	1.84E-06
2-HEXANONE	2.13E-06	1.50E-08	1.30E-06		2.56E-05	1.19E-08	8.14E-07				1.30E-06	1.30E-06
CHLOROFORM												
1,2-DICHLOROPROPANE	2.16E-06	1.52E-08	1.32E-06		2.48E-05	4.96E-08	8.24E-07				1.32E-06	1.32E-06
VINYL CHLORIDE	3.43E-07	2.41E-09	2.10E-07		1.25E-05	4.42E-07	1.31E-07				2.10E-07	2.10E-07
PHENOL	1.52E-02	1.07E-04	9.31E-03		2.93E-01	5.89E-06	5.83E-03				9.31E-03	9.31E-03
BENZOIC ACID	5.84E-04	4.11E-06	3.57E-04		4.37E-01	3.43E-09	2.23E-04				3.57E-04	3.57E-04
FLUORENE	3.80E-06	2.67E-08	2.32E-06		7.72E-03		1.45E-06				2.32E-06	2.32E-06
HEXACHLOROCYCLOPENTADIENE	1.81E-02	1.27E-04	1.10E-02		4.24	8.79E-07	0.01				1.10E-02	1.10E-02
2-METHYLNAPHTHALENE	1.42E-05	9.97E-08	8.66E-06		3.40E-03		5.43E-06				8.66E-06	8.66E-06
2-METHYLPHENOL	5.95E-04	4.18E-06	3.63E-04		1.16E-02	1.14E-06	2.28E-04				3.63E-04	3.63E-04
4-METHYLPHENOL	3.56E-05	2.50E-07	2.17E-05		3.52E-03	5.23E-09	1.36E-05				2.17E-05	2.17E-05
NAPHTHALENE	6.07E-04	4.27E-06	3.70E-04		6.65E-02	1.14E-07	2.32E-04				3.70E-04	3.70E-04
2,4-DIMETHYLPHENOL	9.94E-06	6.99E-08	6.07E-06		1.32E-03		3.80E-06				6.07E-06	6.07E-06
BIS(2-CHLOROETHYL)ETHER	1.52E-03	1.07E-05	9.25E-04		5.74E-02	8.33E-07	5.80E-04				9.25E-04	9.25E-04
METHYLCHLORIDE	8.39E-06	5.90E-08	5.12E-06		3.38E-04	1.65E-05	3.21E-06				5.12E-06	5.12E-06
ETHYLPHENOL	4.52E-02	3.18E-04	2.76E-02		5.07	5.36E-06	1.73E-02				2.76E-02	2.76E-02
ISOPROPYLPHENOL	4.58E-02	3.22E-04	2.80E-02		2.07	2.14E-05	1.75E-02				2.80E-02	2.80E-02
ISOPROPYENYLPHENOL	7.08E-02	4.98E-04	4.32E-02		4.21	3.43E-05	2.71E-02				4.32E-02	4.32E-02
BISPHENOL A	3.45E-06	2.43E-08	2.11E-06		16.69		1.32E-06				2.11E-06	2.11E-06
CYCLOPENTADIENE	2.58E-05	1.82E-07	1.58E-05		5.06E-04	5.11E-06	9.88E-06				1.58E-05	1.58E-05
METHYLCYCLOPENTADIENE	2.63E-03	1.85E-05	1.60E-03		3.42E-02	1.50E-04	1.01E-03				1.60E-03	1.60E-03
PROPIONALDEHYDE	5.48E-06	3.85E-08	3.35E-06		8.69E-05	8.19E-07	2.10E-06				3.35E-06	3.35E-06
ACROLEIN	6.82E-06	4.80E-08	4.17E-06		1.01E-04	8.39E-07	2.61E-06				4.17E-06	4.17E-06
METHYLACETYLENE	5.43E-06	3.82E-08	3.32E-06		2.22E-04	1.06E-05	2.08E-06				3.32E-06	3.32E-06
ACETALDEHYDE	4.66E-04	3.27E-06	2.84E-04		1.01E-02	2.02E-04	1.78E-04				2.84E-04	2.84E-04
ACETIC ACID	9.61E-03	6.75E-05	5.86E-03		9.99E-02	6.75E-05	3.67E-03				5.86E-03	5.86E-03
FURAN	1.68E-04	1.18E-06	1.03E-04		3.37E-03	4.77E-05	6.43E-05				1.03E-04	1.03E-04
METHYLFURFURAL	5.99E-04	4.21E-06	3.66E-04		2.80		2.29E-04				3.66E-04	3.66E-04
BENZENE DIOL	9.29E-04	6.53E-06	5.67E-04		4.57E-01	1.59E-08	3.55E-04				5.67E-04	5.67E-04
BENZENE DIOL DIACETATE	3.80E-03	2.67E-05	2.32E-03		6.03E-02	8.44E-06	1.45E-03				2.32E-03	2.32E-03
BENZENE TRIOL TRIACETATE	4.80E-05	3.38E-07	2.93E-05		1.29		1.84E-05				2.93E-05	2.93E-05
CYCLOPENTENONE	9.51E-04	6.68E-06	5.80E-04		1.40E-02	4.72E-06	3.64E-04				5.80E-04	5.80E-04
PENTENYNE	3.00E-06	2.11E-08	1.83E-06		5.99E-05	5.73E-07	1.15E-06				1.83E-06	1.83E-06
BUTADIENE	1.32E-06	9.28E-09	8.06E-07		4.49E-05	1.28E-06	5.05E-07				8.06E-07	8.06E-07
4-NITROPHENOL	5.51E-05	3.88E-07	3.37E-05		3.88E-07		2.11E-05				3.37E-05	3.37E-05
BUTYLBENZYLPHTHALATE												
BIS(2-ETHYLHEXYL)PHTHALATE												
4-METHYL-3-HEXANOL	3.99E-03	2.81E-05	2.44E-03		2.81E-05	1.39E-06	1.53E-03				2.44E-03	2.44E-03
PHENAZINE	3.37E-06	2.37E-08	2.06E-06		2.37E-08		1.29E-06				2.06E-06	2.06E-06
TETRADECANOIC ACID	1.62E-06	1.14E-08	9.92E-07		1.14E-08		6.22E-07				9.92E-07	9.92E-07
1-PHENYL-1H-BENZOTRIAZOLE	3.75E-06	2.64E-08	2.29E-06		2.64E-08		1.43E-06				2.29E-06	2.29E-06
9-ACRIDINAMINE	5.12E-07	3.60E-09	3.13E-07		3.60E-09		1.96E-07				3.13E-07	3.13E-07
4,6-DIMETHOXY-2(2H)-BENZOFURANONE	8.96E-06	6.30E-08	5.47E-06		6.30E-08		3.43E-06				5.47E-06	5.47E-06
BENZALDEHYDE, (PHENYLMETHYLENE)HYDRAZONE	9.74E-07	6.85E-09	5.94E-07		6.85E-09		3.73E-07				5.94E-07	5.94E-07
HEXADECANOIC ACID	4.65E-06	3.27E-08	2.84E-06		3.27E-08		1.78E-06				2.84E-06	2.84E-06
OCTADECANOIC ACID	3.79E-06	2.66E-08	2.31E-06		2.66E-08		1.45E-06				2.31E-06	2.31E-06
THIIRANE	5.11E-02	3.59E-04	3.12E-02		3.59E-04	5.91E-03	1.95E-02				3.12E-02	3.12E-02
1-BUTANOL	9.12E-02	6.41E-04	5.56E-02		6.41E-04	3.78E-04	3.49E-02				5.56E-02	5.56E-02
1-METHYLETHYL-BENZENE	1.66E-02	1.17E-04	1.01E-02		1.17E-04	2.64E-05	6.35E-03				1.01E-02	1.01E-02
DECANE	1.21E-02	8.53E-05	7.40E-03		8.53E-05	1.02E-05	4.64E-03				7.40E-03	7.40E-03
UNDECANE	4.31E-03	3.03E-05	2.63E-03		3.03E-05	1.37E-06	1.65E-03				2.63E-03	2.63E-03
ANILINE	5.69E-03	4.00E-05	3.48E-03		4.00E-05	2.50E-06	2.18E-03				3.48E-03	3.48E-03
2-ETHYL-1-HEXANOL	2.78E-03	1.95E-05	1.70E-03		1.95E-05	5.17E-07	1.06E-03				1.70E-03	1.70E-03
PCB					3.40E-01							
TOTAL PEAK THROUGHPUT, LB/HR	306950.7	2157.7	187372.7		2210.9	89315.7	117420.3	2392.7	655.1		187372.7	187372.7
TOTAL AVERAGE THROUGHPUT, LB/HR	266885.0	2652.6	186956.9		2707.8	57174.5	77275.5	1856.2	476.5		186956.9	186956.9

THIS DRAWING SUPERSEDES DRAWING 24915-07-M5-QGE-00001

NO.	DATE	DESCRIPTION	DR	CK	DL	PE	APPD
1	11-3-04	ISSUED FOR DESIGN (IFD) SHEET REDRAWN	NI	WW	SH	JB	JU
0	7-2-04	ISSUED FOR DESIGN (IFD)	WW	NI	SH	JB	JU

QUALITY ☐ LEVEL 1 ☒ LEVEL 2 ☐ LEVEL 3 ☐ ALL

BECHTEL PARSONS BLUE GRASS
A Joint Venture of Bechtel National, INC. and Parsons Infrastructure & Technology Group Inc.

DOD PROGRAM MANAGER FOR ASSEMBLED CHEMICAL WEAPONS ASSESSMENT EDGEWOOD, MARYLAND

US ARMY ENGINEERING AND SUPPORT CENTER, HUNTSVILLE HUNTSVILLE, ALABAMA

BLUE GRASS CHEMICAL AGENT DESTRUCTION PILOT PLANT PROJECT (BGCAPP)
RICHMOND, KENTUCKY

CONTRACT NO. DAAA09-03-D-0023

MUNITIONS DEMILITARIZATION BUILDING OFFGAS TREATMENT EBH/ENR PROCESS FLOW DIAGRAM

PROFESSIONAL STAMP

DRAWING NUMBER 24915-07-M5-OTE-00001 SHEET 2 OF 4 REV 1

07-M5-OTE-1-2.PFZ BGCAPP_E2.BDR

DESIGN FILE: DGNSPEC$$$$$$$$$$$$$$$$$$$$$$$$$$$$$$$$
PLOTTED BY: USER$ ON DATE$$$$$$$ AT SYTIME USING COLOR$$$$$$$$$$$$$$$$$$$$

MATERIAL BALANCE TABLE FOR PFD: 24915-07-M5-OTE-00001
OFF GAS TREATMENT EBH/ENS
CASE: AGENT VX CO-PROCESSING PEAK THROUGHPUT

STREAM NUMBER	24	27	552	8501	8502	8503	8504	8505	8506	8507
Description	Total Vent Gas From EBH #1	Pyrolysis Gas From HDC #1	Total Vent Gas From ENR	Fresh Water To HDC Flue Gas Venturi	HDC Flue Gas Separator Bottom Liquid	HDC Flue Gas Condensate Pump Discharge	HDC Flue Gas Venturi Scrubing Liquid	HDC Flue Gas Venturi Condensate	HDC Flue Gas Venturi Overhead Vapor	Hot HDC Flue Gas To Pre-Catalytic Treatment Unit
Temperature, oF	230	1100	220	77	150	150	150	150	159	1200
Pressure, PSIA	14.23	14.23	30	20	13.87	85	85	85	13.87	13.69
Instantaneous Volume Flow, GPM (ACFM)	(31962.3)	(473.6)	(5.4)	0.50	3.18	3.18	3.00	0.18	(451.0)	(749.7)
Density, LB/FT^3	0.054	0.026	0.095	62.252	74.597	74.597	74.597	74.597	0.033	0.02
Viscosity, CP	0.021	0.036	0.018	0.764	5.233	5.233	5.233	5.233	0.035	0.035
MW	27.944	30.455	22.947						25.454	25.454
Enthalpy, MMBTU/HR	-24.399	0.06	-0.069	-1.706	-7.496	-7.496	-7.079	-0.418	-1.228	-0.925
Component Flows, LB/HR										
TNT										
TETRYL										
RDX	1.11E-01									
TRIACETIN	5.26E-01									
NITROCELLULOSE	2.00E-03									
NITROGLYCERIN	7.21E-01									
NITRODIPHENYLAMINE	7.00E-03		1.54E-08							
NITROSODIPHENYLAMINE	3.00E-03		1.84E-07							
NITROPHENOL	2.50E-02		4.88E-06							
DIETHYLPHTHALATE	6.90E-02		4.63E-06							
DIMETHYLPHTHALATE	1.13E-01		2.26E-05							
ETHANOL	1.72		1.27E-03							
LEAD STEARATE										
SODIUM STEARATE										
LEAD OXIDE										
O2	22850.26		5.34E-03							
N2	75204.85	600.00	18.41		4.06E-02	4.06E-02	3.84E-02	2.26E-03	600.00	600.00
H2	28.65	1.20	9.56E-06		4.41E-05	4.41E-05	4.16E-05	2.46E-06	1.20	1.20
CO2		12.34	2.79E-03		1.69E-02	1.69E-02	1.60E-02	9.42E-04	12.34	12.34
CO		14.15	4.71E-05		1.04E-03	1.04E-03	9.83E-04	5.80E-05	14.15	14.15
NH3	14.74		8.58E-03							
N2O	6.65		6.32E-03							
NO			2.80E-08							
NO2			4.58E-07							
H2O	4911.96	5.18	12.23	250.00	1029.24	1029.24	971.91	57.32	197.85	197.85
NAOH										
HCL										
H2SO4										
HCLO										
HNO3										
NA2SO4										
NANO2			1.31E-03							
NANO3			1.52E-03							
NACL										
NACLO										
NAOH(S)										
NACL(S)										
NA2CO3(S										
NANO3(S)										
NANO2(S)										
NA2SO4(S										
NAHCO3(S										
AMMSO4(S										
AMMNO3										
AMMHSO4										
AMMHCO3										
NH4CL(S)										
AL(OH)3										
SODIUM FORMATE										
SODIUM ACETATE										
GLYCEROL	4.80E-02		1.05E-05							
NAALO2										
METHANE		1.24	4.77E-06		2.91E-04	2.91E-04	2.75E-04	1.62E-05	1.24	1.24
ETHYLENE		1.27	5.36E-06		1.09E-03	1.09E-03	1.02E-03	6.04E-05	1.27	1.27
PROPYLENE		9.20E-01	6.85E-06		2.57E-03	2.57E-03	2.43E-03	1.43E-04	9.20E-01	9.20E-01
ACETONE		2.01E-01	6.48E-06		1.61E-02	1.61E-02	1.52E-02	8.96E-04	2.00E-01	2.00E-01
BENZENE		1.07E-01	3.30E-06		1.61E-02	1.61E-02	1.52E-02	8.95E-04	1.06E-01	1.06E-01
1,2-DICHLOROETHANE		2.04E-01	9.28E-06		4.79E-02	4.79E-02	4.52E-02	2.67E-03	2.01E-01	2.01E-01
ETHYLBENZENE		1.65E-01	3.94E-04		1.10E-01	1.10E-01	1.04E-01	6.12E-03	1.59E-01	1.59E-01
METHYLENE CHLORIDE										
STYRENE		8.40E-02	5.39E-03		8.22E-02	8.22E-02	7.76E-02	4.58E-03	7.94E-02	7.94E-02
TOLUENE		2.00E-01	5.80E-06		6.53E-02	6.53E-02	6.17E-02	3.64E-03	1.96E-01	1.96E-01
2-BUTANONE		2.60E-02	8.68E-07		4.07E-03	4.07E-03	3.85E-03	2.27E-04	2.58E-02	2.58E-02
XYLENE		5.00E-03	1.48E-07		3.86E-03	3.86E-03	3.64E-03	2.15E-04	4.79E-03	4.79E-03
CHLOROETHANE		1.00E-01	2.42E-06		2.18E-03	2.18E-03	2.06E-03	1.22E-04	9.99E-02	9.99E-02
2-HEXANONE		1.00E-03	3.19E-08		5.97E-04	5.97E-04	5.64E-04	3.33E-05	9.67E-04	9.67E-04
CHLOROFORM										
1,2-DICHLOROPROPANE		3.00E-03	1.12E-07		8.46E-04	8.46E-04	7.99E-04	4.71E-05	2.95E-03	2.95E-03
VINYL CHLORIDE		3.10E-02	6.16E-07		0.00	3.41E-04	3.22E-04	1.90E-05	3.10E-02	3.10E-02
PHENOL		1.08	1.27E-04		7.26	7.26	6.85	4.04E-01	6.74E-01	6.74E-01
BENZOIC ACID		5.57E-01	4.49E-06		9.51	9.51	8.98	5.30E-01	2.74E-02	2.74E-02
FLUORENE		9.00E-03	2.80E-08		1.59E-01	1.59E-01	1.50E-01	8.83E-03	1.69E-04	1.69E-04
HEXACHLOROCYCLOPENTADIENE		8.00	1.53E-04		100.17	100.17	94.59	5.58	2.42	2.42
2-METHYLNAPHTHALENE		6.00E-03	1.19E-07		7.89E-02	7.89E-02	7.45E-02	4.40E-03	1.60E-03	1.60E-03
2-METHYLPHENOL		1.31E-01	7.16E-06		3.08E-01	3.08E-01	2.91E-01	1.72E-02	1.14E-01	1.14E-01
4-METHYLPHENOL		7.00E-03	2.93E-07		7.95E-02	7.95E-02	7.51E-02	4.43E-03	2.57E-03	2.57E-03
NAPHTHALENE		1.84E-01	5.46E-06		1.63	1.63	1.54	9.08E-02	9.32E-02	9.32E-02
2,4-DIMETHYLPHENOL		2.00E-03	6.91E-08		2.53E-02	2.53E-02	2.39E-02	1.41E-03	5.92E-04	5.92E-04
BIS(2-CHLOROETHYL)ETHER		3.36E-01	1.52E-05		1.50	1.50	1.41	8.34E-02	2.53E-01	2.53E-01
METHYLCHLORIDE		1.02	2.34E-05		9.37E-03	9.37E-03	8.85E-03	5.22E-04	1.02	1.02
ETHYLPHENOL		10.71	3.86E-04		119.04	119.04	112.41	6.63	4.08	4.08
ISOPROPYLPHENOL		11.95	4.63E-04		54.91	54.91	51.85	3.06	8.89	8.89
ISOPROPYENYLPHENOL		13.17	6.76E-04		105.21	105.21	99.35	5.86	7.31	7.31
BISPHENOL A		20.02	2.66E-08		359.51	359.51	339.49	20.02	4.37E-04	4.37E-04
CYCLOPENTADIENE		2.42E-01	7.31E-06		1.37E-02	1.37E-02	1.30E-02	7.65E-04	2.41E-01	2.41E-01
METHYLCYCLOPENTADIENE		7.35	2.34E-04		9.36E-01	9.36E-01	8.84E-01	5.22E-02	7.29	7.29
PROPIONALDEHYDE		3.90E-02	1.21E-06		2.41E-03	2.41E-03	2.27E-03	1.34E-04	3.89E-02	3.89E-02
ACROLEIN		3.40E-02	1.24E-06		2.76E-03	2.76E-03	2.61E-03	1.54E-04	3.38E-02	3.38E-02
METHYLACETYLENE		9.10E-01	1.60E-05		6.51E-03	6.51E-03	6.15E-03	3.62E-04	9.10E-01	9.10E-01
ACETALDEHYDE		9.80	2.84E-04		2.74E-01	2.74E-01	2.59E-01	1.52E-02	9.79	9.79
ACETIC ACID		2.79	1.81E-04		2.64	2.64	2.49	1.47E-01	2.64	2.64
FURAN		2.25	6.76E-05		9.16E-02	9.16E-02	8.65E-02	5.10E-03	2.25	2.25
METHYLFURFURAL		3.38	4.63E-06		60.52	60.52	57.15	3.37	7.31E-03	7.31E-03
BENZENE DIOL		5.71E-01	7.34E-06		10.08	10.08	9.52	0.56	9.61E-03	9.61E-03
BENZENE DIOL DIACETATE		1.17	4.96E-05		1.67	1.67	1.58	9.30E-02	1.08E+00	1.08E+00
BENZENE TRIOL TRIACETATE		1.55	3.70E-07		27.86	27.86	26.31	1.55	1.23E-04	1.23E-04
CYCLOPENTENONE		2.84E-01	1.53E-05		3.70E-01	3.70E-01	3.49E-01	2.06E-02	2.63E-01	2.63E-01
PENTENYNE		4.30E-02	8.47E-07		1.68E-03	1.68E-03	1.59E-03	9.36E-05	4.29E-02	4.29E-02
BUTADIENE		1.44E-01	1.85E-06		1.26E-03	1.26E-03	1.19E-03	7.03E-05	1.44E-01	1.44E-01
4-NITROPHENOL			4.02E-07							
BUTYLBENZYLPHTHALATE										
BIS(2-ETHYLHEXYL)PHTHALATE										
4-METHYL-3-HEXANOL			3.03E-05							
PHENAZINE			2.44E-08							
TETRADECANOIC ACID			1.18E-08							
1-PHENYL-1H-BENZOTRIAZOLE			2.74E-08							
9-ACRIDINAMINE			3.60E-09							
4,6-DIMETHOXY-2(2H)-BENZOFURANONE			6.56E-08							
BENZALDEHYDE, (PHENYLMETHYLENE)HYDRAZONE			7.08E-09							
HEXADECANOIC ACID			3.39E-08							
OCTADECANOIC ACID			2.77E-08							
THIIRANE			6.51E-03							
1-BUTANOL			1.06E-03							
1-METHYLETHYL-BENZENE			1.48E-04							
DECANE			9.91E-05							
UNDECANE			3.29E-05							
ANILINE			4.42E-05							
2-ETHYL-1-HEXANOL			2.07E-05							
PCB		4.10E-01	4.30E-09		7.36	7.36	6.95	4.10E-01	5.58E-07	5.58E-07
TOTAL PEAK THROUGHPUT, LB/HR	103020.44	735.56	30.69	250.00	1900.87	1900.87	1795.00	105.87	879.69	879.69
TOTAL AVERAGE THROUGHPUT, LB/HR	66232.10	685.68	32.94	200.00	1901.33	1901.33	1846.85	54.48	831.19	831.19

STREAM NUMBER	8508	8510	8514	8515	8516	8517	8518	8519	8520	8521
Description	CATOX Feed	Hot Air To Pre-Catalytic Treatment Unit	Venturi Scrubber Feed	Scrubber Tower Overhead Vapor	Scrubber Tower Bottom Liquid	EBH Offgas To HVAC Filter Units	37% HCl Solution	Scrubber Recirculation Pump Discharge	Scrubber Tower Condensate	Cool Recirculation To Scrubber Tower
Temperature, oF	800	800	264	90	107	184	77	107	107	70
Pressure, PSIA	12.78	13.87	11.88	11.34	11.43	14.23	20	85	85	65
Instantaneous Volume Flow, GPM (ACFM)	(2935.9)	(1480.5)	(41968.9)	(32513.4)	653.76	(30347.6)	0.13	653.82	3.82	372.69
Density, LB/FT^3	0.024	0.03	0.043	0.054	62.394	0.058	74.22	62.403	62.403	62.791
Viscosity, CP	0.029	0.035	0.022	0.018	0.581	0.021	1.666	0.58	0.58	0.812
MW	25.468	28.82	27.834	28.1		28.1				
Enthalpy, MMBTU/HR	-5.267	0.463	-29.736	-23.992	-2187.174	-21.508	-0.382	-2187.484	-12.785	-1261.365
Component Flows, LB/HR										
TNT										
TETRYL										
RDX			1.11E-01		18.99			18.99	1.11E-01	10.89
TRIACETIN			5.26E-01		89.97			89.97	5.26E-01	51.60
NITROCELLULOSE			2.00E-03		3.42E-01			3.42E-01	2.00E-03	1.96E-01
NITROGLYCERIN			7.21E-01		123.36			123.36	7.21E-01	70.75
NITRODIPHENYLAMINE			7.00E-03		1.20			1.20	7.00E-03	6.87E-01
NITROSODIPHENYLAMINE			3.00E-03		5.13E-01			5.13E-01	3.00E-03	2.94E-01
NITROPHENOL			2.50E-02		4.28			4.28	2.50E-02	2.45
DIETHYLPHTHALATE			6.90E-02		11.81			11.81	6.90E-02	6.77
DIMETHYLPHTHALATE			1.13E-01		19.33			19.33	1.13E-01	11.09
ETHANOL			1.72	1.48	42.01	1.48		42.01	2.46E-01	24.10
LEAD STEARATE										
SODIUM STEARATE										
LEAD OXIDE										
O2	483.46	597.57	23301.32	23301.31	1.37	23301.31		1.37	7.99E-03	7.84E-01
N2	2626.22	2026.22	77849.47	77849.46	2.42	77849.46		2.42	1.42E-02	1.39
H2	1.20E-02		28.65	28.65	1.22E-03	28.65		1.22E-03	7.10E-06	6.97E-04
CO2	138.61		173.56	173.55	2.24E-01	173.55		7.80E-01	4.56E-03	4.48E-01
CO	1.42E-01		4.71E-05	4.71E-05	2.05E-07	4.71E-05		2.05E-07	1.20E-09	1.18E-07
NH3			14.75	6.90E-02	6.50	6.90E-02		3.63E-03	2.12E-05	5.17E-04
N2O			6.65	6.65	5.35E-01	6.65		5.35E-01	3.13E-03	3.07E-01
NO			4.14E-03	4.14E-03	4.81E-06	4.14E-03		4.81E-06	2.81E-08	2.76E-06
NO2			1.30E-03	1.29E-03	1.99E-03	1.29E-03		1.99E-03	1.16E-05	1.14E-03
H2O	978.76	1.64	5912.57	4096.57	318975.60	4096.57	48.51	319024.34	1864.51	182976.82
NAOH										
HCL			3.03			4.36E-07	28.47	14.15	7.29E-02	8.13
H2SO4										
HCLO			2.17E-04		3.71E-02			3.71E-02	2.17E-04	2.13E-02
HNO3										
NA2SO4										
NANO2			1.31E-03							
NANO3			1.52E-03							
NACL										
NACLO										
NAOH(S)										
NACL(S)										
NA2CO3(S										
NANO3(S)					2.55E-01			2.55E-01		1.70E-01
NANO2(S)					2.07E-01			2.07E-01		1.38E-01
NA2SO4(S										
NAHCO3(S										
AMMSO4(S										
AMMNO3										
AMMHSO4										
AMMHCO3										
NH4CL(S)					7866.67			7887.10	46.10	4523.67
AL(OH)3										
SODIUM FORMATE										
SODIUM ACETATE										
GLYCEROL			4.80E-02	2.25E-06	8.21E+00	2.25E-06		8.21	4.80E-02	4.71
NAALO2										
METHANE	1.24E-01		4.77E-06	4.76E-06	2.41E-07	4.76E-06		2.41E-07	1.41E-09	1.38E-07
ETHYLENE	1.27		5.36E-06	5.36E-06	5.03E-07	5.36E-06		5.03E-07	2.94E-09	2.89E-07
PROPYLENE	9.20E-01		6.85E-06	6.84E-06	1.73E-06	6.84E-06		1.73E-06	1.01E-08	9.90E-07
ACETONE	2.00E-01		6.48E-06	6.21E-06	4.67E-05	6.21E-06		4.67E-05	2.73E-07	2.68E-05
BENZENE	1.06E-01		3.30E-06	2.98E-06	5.47E-05	2.98E-06		5.47E-05	3.20E-07	3.14E-05
1,2-DICHLOROETHANE	2.01E-01		9.28E-06	8.20E-06	1.84E-04	8.20E-06		1.84E-04	1.08E-06	1.06E-04
ETHYLBENZENE	1.59E-01		3.94E-04	2.00E-04	3.33E-02	2.00E-04		3.33E-02	1.95E-04	1.91E-02
METHYLENE CHLORIDE										
STYRENE	7.94E-02		5.39E-03	2.28E-03	5.33E-01	2.28E-03		5.33E-01	3.11E-03	3.06E-01
TOLUENE	1.96E-01		5.80E-06	4.29E-06	2.58E-04	4.29E-06		2.58E-04	1.51E-06	1.48E-04
2-BUTANONE	2.58E-02		8.68E-07	7.81E-07	1.49E-05	7.81E-07		1.49E-05	8.70E-08	8.53E-06
XYLENE	4.79E-03		1.48E-07	6.81E-08	1.36E-05	6.81E-08		1.36E-05	7.95E-08	7.80E-06
CHLOROETHANE	9.99E-02		2.42E-06	2.40E-06	3.48E-06	2.40E-06		3.48E-06	2.03E-08	1.99E-06
2-HEXANONE	9.67E-04		3.19E-08	1.74E-08	2.48E-06	1.74E-08		2.48E-06	1.45E-08	1.42E-06
CHLOROFORM										
1,2-DICHLOROPROPANE	2.95E-03		1.12E-07	9.31E-08	3.26E-06	9.31E-08		3.26E-06	1.91E-08	1.87E-06
VINYL CHLORIDE	3.10E-02		6.16E-07	6.14E-07	3.98E-07	6.14E-07		3.98E-07	2.33E-09	2.28E-07
PHENOL	6.74E-01		1.27E-04	9.88E-06	2.01E-02	9.88E-06		2.01E-02	1.17E-04	1.15E-02
BENZOIC ACID	2.74E-02		4.49E-06	5.94E-09	7.67E-04	5.94E-09		7.67E-04	4.48E-06	4.40E-04
FLUORENE	1.69E-04		2.80E-08		4.76E-06			4.76E-06	2.78E-08	2.73E-06
HEXACHLOROCYCLOPENTADIENE	2.42		1.53E-04	1.64E-06	2.60E-02	1.64E-06		2.60E-02	1.52E-04	1.49E-02
2-METHYLNAPHTHALENE	1.60E-03		1.19E-07	1.62E-09	2.00E-05	1.62E-09		2.00E-05	1.17E-07	1.15E-05
2-METHYLPHENOL	1.14E-01		7.16E-06	2.09E-06	8.67E-04	2.09E-06		8.67E-04	5.07E-06	4.98E-04
4-METHYLPHENOL	2.57E-03		2.93E-07	9.16E-09	4.86E-05	9.16E-09		4.86E-05	2.84E-07	2.79E-05
NAPHTHALENE	9.32E-02		5.46E-06	2.14E-07	8.98E-04	2.14E-07		8.98E-04	5.25E-06	5.15E-04
2,4-DIMETHYLPHENOL	5.92E-04		6.91E-08	1.43E-09	1.16E-05	1.43E-09		1.16E-05	6.76E-08	6.64E-06
BIS(2-CHLOROETHYL)ETHER	2.53E-01		1.52E-05	1.63E-06	2.33E-03	1.63E-06		2.33E-03	1.36E-05	1.34E-03
METHYLCHLORIDE	1.02		2.34E-05	2.33E-05	9.96E-06	2.33E-05		9.96E-06	5.82E-08	5.71E-06
ETHYLPHENOL	4.08E-01		3.86E-04	9.81E-06	6.44E-02	9.81E-06		6.44E-02	3.76E-04	3.69E-02
ISOPROPYLPHENOL	8.89E-01		4.63E-04	4.28E-05	7.19E-02	4.28E-05		7.19E-02	4.20E-04	4.12E-02
ISOPROPYENYLPHENOL	7.31E-01		6.76E-04	6.38E-05	1.05E-01	6.38E-05		1.05E-01	6.13E-04	6.01E-02
BISPHENOL A	4.37E-04		2.66E-08		4.55E-06			4.55E-06	2.66E-08	2.61E-06
CYCLOPENTADIENE	2.41E-01		7.31E-06	7.14E-06	2.95E-05	7.14E-06		2.95E-05	1.72E-07	1.69E-05
METHYLCYCLOPENTADIENE	7.29E-01		2.34E-04	2.16E-04	3.07E-03	2.16E-04		3.07E-03	1.80E-05	1.76E-03
PROPIONALDEHYDE	3.89E-02		1.21E-06	1.17E-06	6.36E-06	1.17E-06		6.36E-06	3.72E-08	3.65E-06
ACROLEIN	3.38E-02		1.24E-06	1.19E-06	7.85E-06	1.19E-06		7.85E-06	4.59E-08	4.50E-06
METHYLACETYLENE	9.10E-01		1.60E-05	1.59E-05	6.82E-06	1.59E-05		6.82E-06	3.99E-08	3.91E-06
ACETALDEHYDE	0.98		2.84E-04	2.81E-04	5.29E-04	2.81E-04		5.29E-04	3.09E-06	3.04E-04
ACETIC ACID	0.26		1.81E-04	1.09E-04	1.24E-02	1.09E-04		1.24E-02	7.24E-05	7.10E-03
FURAN	0.22		6.76E-05	6.65E-05	1.91E-04	6.65E-05		1.91E-04	1.11E-06	1.09E-04
METHYLFURFURAL	7.31E-03		4.63E-06		7.92E-04			7.92E-04	4.63E-06	4.54E-04
BENZENE DIOL	9.61E-03		7.34E-06	2.79E-08	1.25E-03	2.79E-08		1.25E-03	7.32E-06	7.18E-04
BENZENE DIOL DIACETATE	1.08E+00		4.96E-05	1.61E-05	5.73E-03	1.61E-05		5.73E-03	3.35E-05	3.29E-03
BENZENE TRIOL TRIACETATE	1.23E-04		3.70E-07		6.33E-05			6.33E-05	3.70E-07	3.63E-05
CYCLOPENTENONE	2.63E-01		1.53E-05	7.87E-06	1.27E-03	7.87E-06		1.27E-03	7.44E-06	7.30E-04
PENTENYNE	4.29E-02		8.47E-07	8.27E-07	3.54E-06	8.27E-07		3.54E-06	2.07E-08	2.03E-06
BUTADIENE	1.44E-01		1.85E-06	1.84E-06	1.58E-06	1.84E-06		1.58E-06	9.21E-09	9.04E-07
4-NITROPHENOL			4.02E-07		6.87E-05			6.87E-05	4.02E-07	3.94E-05
BUTYLBENZYLPHTHALATE										
BIS(2-ETHYLHEXYL)PHTHALATE										
4-METHYL-3-HEXANOL			3.03E-05	2.18E-06	4.80E-03	2.18E-06		4.80E-03	2.81E-05	2.76E-03
PHENAZINE			2.44E-08		4.17E-06			4.17E-06	2.44E-08	2.39E-06
TETRADECANOIC ACID			1.18E-08		2.02E-06			2.02E-06	1.18E-08	1.16E-06
1-PHENYL-1H-BENZOTRIAZOLE			2.74E-08		4.69E-06			4.69E-06	2.74E-08	2.69E-06
9-ACRIDINAMINE			3.60E-09		6.36E-07			6.36E-07	3.72E-09	3.65E-07
4,6-DIMETHOXY-2(2H)-BENZOFURANONE			6.56E-08		1.12E-05			1.12E-05	6.56E-08	6.43E-06
BENZALDEHYDE, (PHENYLMETHYLENE)HYDRAZONE			7.08E-09		1.21E-06			1.21E-06	7.08E-09	6.95E-07
HEXADECANOIC ACID			3.39E-08		5.81E-06			5.81E-06	3.39E-08	3.33E-06
OCTADECANOIC ACID			2.77E-08		4.73E-06			4.73E-06	2.77E-08	2.71E-06
THIIRANE			6.51E-03	6.26E-03	4.38E-02	6.26E-03		4.38E-02	2.56E-04	2.51E-02
1-BUTANOL			1.06E-03	5.01E-04	9.53E-02	5.01E-04		9.53E-02	5.57E-04	5.46E-02
1-METHYLETHYL-BENZENE			1.48E-04	3.78E-05	1.89E-02	3.78E-05		1.89E-02	1.11E-04	1.09E-02
DECANE			9.91E-05	1.53E-05	1.44E-02	1.53E-05		1.44E-02	8.39E-05	8.23E-03
UNDECANE			3.29E-05	2.12E-06	5.26E-03	2.12E-06		5.26E-03	3.08E-05	3.02E-03
ANILINE			4.42E-05	3.86E-06	6.91E-03	3.86E-06		6.91E-03	4.04E-05	3.96E-03
2-ETHYL-1-HEXANOL			2.07E-05	8.14E-07	3.41E-03	8.14E-07		3.41E-03	1.99E-05	1.96E-03
PCB	0.00		4.30E-09		4.30E-09					
TOTAL PEAK THROUGHPUT, LB/HR	4242.23	2625.42	107293.36	105457.75	327174.91	105457.75	76.98	327252.28	1912.59	187696.04
TOTAL AVERAGE THROUGHPUT, LB/HR	3389.36	2022.47	69654.40	67130.00	279333.38	67130.00	46.50	279379.88	2570.84	187033.13

STREAM NUMBER	8522	8523	8524	8525	8526	8527	8528	8529	8530
Description	Makeup Water To Scrubber Tower	Total OTE Condensate Recycled To ENR	EBH Blower Suction	Venturi Scrubbing Liquid	Air Feed To Air Heater	Water Spary To Pre-Catalytic Treatment Unit	Air Feed To Venturi Scrubber	Scrubber Recirculation Liquid To Cooler	Scrubber Recirculation Liquid To Trim Cooler
Temperature, oF		110	120	107	77	77		107	100
Pressure, PSIA		85	10.98	85	14.23	20		85	75
Instantaneous Volume Flow, GPM (ACFM)	NNF	4.00	(35437.4)	275.00	(614.5)	1.95	NNF	375.00	374.50
Density, LB/FT^3		62.881	0.05	62.403	0.071	62.4		62.403	62.485
Viscosity, CP		0.575	0.019	0.58	0.019	1.16		0.58	0.616
MW			28.1		28.82				
Enthalpy, MMBTU/HR		-13.202	-23.195	-920.065	-0.01	-5.084		-1254.635	-1255.898
Component Flows, LB/HR									
TNT									
TETRYL									
RDX		1.11E-01		7.99				10.89	10.89
TRIACETIN		5.26E-01		37.84				51.60	51.60
NITROCELLULOSE		2.00E-03		1.44E-01				1.96E-01	1.96E-01
NITROGLYCERIN		7.21E-01		51.88				70.75	70.75
NITRODIPHENYLAMINE		7.00E-03		5.04E-01				6.87E-01	6.87E-01
NITROSODIPHENYLAMINE		3.00E-03		2.16E-01				2.94E-01	2.94E-01
NITROPHENOL		2.50E-02		1.80				2.45	2.45
DIETHYLPHTHALATE		6.90E-02		4.97				6.77	6.77
DIMETHYLPHTHALATE		1.13E-01		8.13				11.09	11.09
ETHANOL		2.46E-01	1.48	17.67				24.10	24.10
LEAD STEARATE									
SODIUM STEARATE									
LEAD OXIDE									
O2		7.99E-03	23301.31	5.75E-01	597.57			7.84E-01	7.84E-01
N2		1.64E-02	77849.46	1.02	2026.22			1.39	1.39
H2		9.56E-06	28.65	5.11E-04				6.97E-04	6.97E-04
CO2		5.50E-03	173.55	3.28E-01				4.47E-01	4.47E-01
CO		5.80E-05	4.71E-05	8.64E-08				1.18E-07	1.18E-07
NH3		2.27E-05	6.90E-02	1.53E-03				2.08E-03	1.63E-03
N2O		3.13E-03	6.65	2.25E-01				3.07E-01	3.07E-01
NO		2.81E-08	4.14E-03	2.02E-06				2.76E-06	2.76E-06
NO2		1.16E-05	1.29E-03	8.38E-04				1.14E-03	1.14E-03
H2O		1921.83	4096.57	134183.01	1.64	737.12		182976.82	182976.82
NAOH									
HCL		7.29E-02	4.36E-07	5.98				8.13	8.13
H2SO4									
HCLO		2.17E-04		1.56E-02				2.13E-02	2.13E-02
HNO3									
NA2SO4									
NANO2									
NANO3									
NACL									
NACLO									
NAOH(S)									
NACL(S)									
NA2CO3(S									
NANO3(S)				8.50E-02				1.70E-01	1.70E-01
NANO2(S)				6.90E-02				1.38E-01	1.38E-01
NA2SO4(S									
NAHCO3(S									
AMMSO4(S									
AMMNO3									
AMMHSO4									
AMMHCO3									
NH4CL(S)		46.10		3317.33				4523.67	4523.67
AL(OH)3									
SODIUM FORMATE									
SODIUM ACETATE									
GLYCEROL		4.80E-02	2.25E-06	3.46				4.71	4.71
NAALO2									
METHANE		1.62E-05	4.76E-06	1.01E-07				1.38E-07	1.38E-07
ETHYLENE		6.04E-05	5.36E-06	2.12E-07				2.89E-07	2.89E-07
PROPYLENE		1.43E-04	6.84E-06	7.26E-07				9.90E-07	9.90E-07
ACETONE		8.97E-04	6.21E-06	1.97E-05				2.68E-05	2.68E-05
BENZENE		8.95E-04	2.98E-06	2.30E-05				3.14E-05	3.14E-05
1,2-DICHLOROETHANE		2.67E-03	8.20E-06	7.76E-05				1.06E-04	1.06E-04
ETHYLBENZENE		6.31E-03	2.00E-04	1.40E-02				1.91E-02	1.91E-02
METHYLENE CHLORIDE									
STYRENE		7.69E-03	2.28E-03	2.24E-01				3.06E-01	3.06E-01
TOLUENE		3.64E-03	4.29E-06	1.08E-04				1.48E-04	1.48E-04
2-BUTANONE		2.27E-04	7.81E-07	6.26E-06				8.53E-06	8.53E-06
XYLENE		2.15E-04	6.81E-08	5.72E-06				7.80E-06	7.80E-06
CHLOROETHANE		1.22E-04	2.40E-06	1.46E-06				1.99E-06	1.99E-06
2-HEXANONE		3.33E-05	1.74E-08	1.04E-06				1.42E-06	1.42E-06
CHLOROFORM									
1,2-DICHLOROPROPANE		4.71E-05	9.31E-08	1.37E-06				1.87E-06	1.87E-06
VINYL CHLORIDE		1.90E-05	6.14E-07	1.67E-07				2.28E-07	2.28E-07
PHENOL		4.04E-01	9.88E-06	8.45E-03				1.15E-02	1.15E-02
BENZOIC ACID		5.30E-01	5.94E-09	3.23E-04				4.40E-04	4.40E-04
FLUORENE		8.83E-03		2.00E-06				2.73E-06	2.73E-06
HEXACHLOROCYCLOPENTADIENE		5.58	1.64E-06	1.09E-02				1.49E-02	1.49E-02
2-METHYLNAPHTHALENE		4.40E-03	1.62E-09	8.42E-06				1.15E-05	1.15E-05
2-METHYLPHENOL		1.72E-02	2.09E-06	3.65E-04				4.98E-04	4.98E-04
4-METHYLPHENOL		4.43E-03	9.16E-09	2.04E-05				2.79E-05	2.79E-05
NAPHTHALENE		9.08E-02	2.14E-07	3.78E-04				5.15E-04	5.15E-04
2,4-DIMETHYLPHENOL		1.41E-03	1.43E-09	4.87E-06				6.64E-06	6.64E-06
BIS(2-CHLOROETHYL)ETHER		8.34E-02	1.63E-06	9.79E-04				1.34E-03	1.34E-03
METHYLCHLORIDE		5.22E-04	2.33E-05	4.19E-06				5.71E-06	5.71E-06
ETHYLPHENOL		6.63	9.81E-06	2.71E-02				3.69E-02	3.69E-02
ISOPROPYLPHENOL		3.06	4.28E-05	3.02E-02				4.12E-02	4.12E-02
ISOPROPYENYLPHENOL		5.86	6.38E-05	4.41E-02				6.01E-02	6.01E-02
BISPHENOL A		20.02		1.91E-06				2.61E-06	2.61E-06
CYCLOPENTADIENE		7.65E-04	7.14E-06	1.24E-05				1.69E-05	1.69E-05
METHYLCYCLOPENTADIENE		5.22E-02	2.16E-04	1.29E-03				1.76E-03	1.76E-03
PROPIONALDEHYDE		1.34E-04	1.17E-06	2.67E-06				3.65E-06	3.65E-06
ACROLEIN		1.54E-04	1.19E-06	3.30E-06				4.50E-06	4.50E-06
METHYLACETYLENE		3.63E-04	1.59E-05	2.87E-06				3.91E-06	3.91E-06
ACETALDEHYDE		1.53E-02	2.81E-04	2.23E-04				3.04E-04	3.04E-04
ACETIC ACID		1.47E-01	1.09E-04	5.21E-03				7.10E-03	7.10E-03
FURAN		5.10E-03	6.65E-05	8.02E-05				1.09E-04	1.09E-04
METHYLFURFURAL		3.37		3.33E-04				4.54E-04	4.54E-04
BENZENE DIOL		5.61E-01	2.79E-08	5.26E-04				7.18E-04	7.18E-04
BENZENE DIOL DIACETATE		9.30E-02	1.61E-05	2.41E-03				3.29E-03	3.29E-03
BENZENE TRIOL TRIACETATE		1.55		2.66E-05				3.63E-05	3.63E-05
CYCLOPENTENONE		2.06E-02	7.87E-06	5.35E-04				7.30E-04	7.30E-04
PENTENYNE		9.36E-05	8.27E-07	1.49E-06				2.03E-06	2.03E-06
BUTADIENE		7.03E-05	1.84E-06	6.63E-07				9.04E-07	9.04E-07
4-NITROPHENOL		4.02E-07		2.89E-05				3.94E-05	3.94E-05
BUTYLBENZYLPHTHALATE									
BIS(2-ETHYLHEXYL)PHTHALATE									
4-METHYL-3-HEXANOL		2.81E-05	2.18E-06	2.02E-03				2.76E-03	2.76E-03
PHENAZINE		2.44E-08		1.75E-06				2.39E-06	2.39E-06
TETRADECANOIC ACID		1.18E-08		8.50E-07				1.16E-06	1.16E-06
1-PHENYL-1H-BENZOTRIAZOLE		2.74E-08		1.97E-06				2.69E-06	2.69E-06
9-ACRIDINAMINE		3.72E-09		2.68E-07				3.65E-07	3.65E-07
4,6-DIMETHOXY-2(2H)-BENZOFURANONE		6.56E-08		4.72E-06				6.43E-06	6.43E-06
BENZALDEHYDE, (PHENYLMETHYLENE)HYDRAZONE		7.08E-09		5.09E-07				6.95E-07	6.95E-07
HEXADECANOIC ACID		3.39E-08		2.44E-06				3.33E-06	3.33E-06
OCTADECANOIC ACID		2.77E-08		1.99E-06				2.71E-06	2.71E-06
THIIRANE		2.56E-04	6.26E-03	1.84E-02				2.51E-02	2.51E-02
1-BUTANOL		5.57E-04	5.01E-04	4.01E-02				5.46E-02	5.46E-02
1-METHYLETHYL-BENZENE		1.11E-04	3.78E-05	7.96E-03				1.09E-02	1.09E-02
DECANE		8.39E-05	1.53E-05	6.04E-03				8.23E-03	8.23E-03
UNDECANE		3.08E-05	2.12E-06	2.21E-03				3.02E-03	3.02E-03
ANILINE		4.04E-05	3.86E-06	2.90E-03				3.96E-03	3.96E-03
2-ETHYL-1-HEXANOL		1.99E-05	8.14E-07	1.43E-03				1.96E-03	1.96E-03
PCB		4.10E-01							
TOTAL PEAK THROUGHPUT, LB/HR		2018.46	105457.75	137643.68	2625.42	737.12		187696.04	187696.04
TOTAL AVERAGE THROUGHPUT, LB/HR		2625.32	67130.00	89775.90	2022.47	535.70		187033.13	187033.13

THIS DRAWING SUPERSEDES DRAWING 24915-07-M5-QGE-00001

NO.	DATE	DESCRIPTION	DR	CK	DL	PE	APPD
1	11-3-04	ISSUED FOR DESIGN (IFD) SHEET REDRAWN	NI	WW	SH	JB	JU
0	7-2-04	ISSUED FOR DESIGN (IFD)	WW	NI	SH	JB	JU

QUALITY ☐ LEVEL 1 ☒ LEVEL 2 ☐ LEVEL 3 ☐ ALL

BECHTEL PARSONS BLUE GRASS
A Joint Venture of Bechtel National, INC. and Parsons Infrastructure & Technology Group Inc.

DOD PROGRAM MANAGER FOR ASSEMBLED CHEMICAL WEAPONS ASSESSMENT EDGEWOOD, MARYLAND

US ARMY ENGINEERING AND SUPPORT CENTER, HUNTSVILLE HUNTSVILLE, ALABAMA

BLUE GRASS CHEMICAL AGENT DESTRUCTION PILOT PLANT PROJECT (BGCAPP)
RICHMOND, KENTUCKY

CONTRACT NO. DAAA09-03-D-0023

MUNITIONS DEMILITARIZATION BUILDING OFFGAS TREATMENT EBH/ENR PROCESS FLOW DIAGRAM

PROFESSIONAL STAMP

DRAWING NUMBER 24915-07-M5-OTE-00001 SHEET 3 OF 4 REV 1

07-M5-OTE-1-3.PFZ BGCAPP_E2.BDR

DESIGN FILE: DGNSPEC$$
PLOTTED BY: USER$ ON DATE$$$$$$$$ AT SYTIME USING COLOR$$$$$$$$$$$$$$$$$$$$$$$$$$$$

MATERIAL BALANCE TABLE FOR PFD# 24915-07-M5-OTE-00001
OFF GAS TREATMENT EBH/ENR
CASE: AGENT H PROCESSING PEAK THROUGHPUT

STREAM NUMBER	24	27	552	8501	8502	8503	8504	8505	8506	8507
Description	Total Vent Gas From EBH *)	Pyrolysis Gas From HDC *)	Total Vent Gas From ENR	Fresh Water To HDC Flue Gas Venturi	HDC Flue Gas Separator Bottom Liquid	HDC Flue Gas Condensate Pump Discharge	HDC Flue Gas Venturi Scrubbing Liquid	HDC Flue Gas Venturi Condensate	HDC Flue Gas Venturi Overhead Vapor	Hot HDC Flue Gas To Pre-Catalytic Treatment Unit
Temperature, oF	230	1100	220	77	143	143	143	143	151	800
Pressure, PSIA	14.23	14.23	30	20	13.87	85	85	85	13.87	13.69
Instantaneous Volume Flow, GPM (ACFM)	(746.3)	(422.2)	(6.2)	0.30	2.78	2.78	2.75	0.02	(290.5)	(479.8)
Density, LB/FT^3	0.049	0.024	0.096	62.252	61.336	61.336	61.336	61.336	0.032	0.026
Viscosity, CP	0.017	0.037	0.019	0.764	0.438	0.438	0.438	0.438	0.016	0.029
MW	25.222	27.962	23.119						25.363	25.363
Enthalpy, MMBTU/HR	-2.874	0.148	-0.077	-1.024	-9.231	-9.231	-5.145	-0.087	-0.789	-0.647
Component Flows, LB/HR										
O2	386.27		5.81E-04							
N2	1271.55	600.00	22.09		4.96E-04	4.96E-04	4.92E-04	4.66E-06	600.00	600.00
H2	0.18		6.93E-09							
CO2										
CO										
NH3	1.80		1.12E-03							
N2O										
NO			6.40E-10							
NO2			2.25E-03							
H2O	514.01	2.00	13.42	150.00	1365.72	1365.72	1352.91	12.81	139.19	139.19
NAOH										
HCL										
H2SO4										
HCLO										
HNO3										
NA2SO4										
NANO2			3.80E-04							
NHAGLYSI										
ALUMINI										
SODIUM FORMATE										
SODIUM ACETATE										
GLYCEROL										
NAALO2										
PCB										
TOTAL PEAK THROUGHPUT, LB/HR	2173.8	602.0	35.7	150.0	1365.7	1365.7	1352.9	12.8	739.2	739.2
TOTAL AVERAGE THROUGHPUT, LB/HR	2178.8	602.0	37.0	150.0	1215.7	1365.7	1352.9	12.8	739.2	739.2

STREAM NUMBER	8508	8510	8514	8515	8516	8517	8518	8519	8520	8521
Description	CATOX Feed	Hot Air To Pre-Catalytic Treatment Unit	Venturi Scrubber Feed	Scrubber Tower Overhead Vapor	Scrubber Tower Bottom Liquid	EBH Offgas To HVAC Filter Units	31% HCl Solution	Scrubber Recirculation Pump Discharge	Scrubber Tower Condensate	Coil Recirculation To Scrubber Tower
Temperature, oF	801	800	251	77	87	184	77	87	87	70
Pressure, PSIA	12.78	13.87	11.88	11.34	11.43	14.23	20	85	85	45
Instantaneous Volume Flow, GPM (ACFM)	(1951.7)	(361.5)	(16799.9)	(13458.4)	299.28	(12017.7)	0.02	300.26	0.26	379.02
Density, LB/FT^3	0.025	0.03	0.044	0.056	62.972	0.059	74.22	62.977	62.977	63.139
Viscosity, CP	0.031	0.035	0.023	0.018	0.688	0.021	1.666	0.688	0.688	0.807
MW	26.438	28.82	28.536	28.397		28.397				
Enthalpy, MMBTU/HR	-0.786	0.113	-2.357	-6.464	-1002.341	-5.263	-0.051	-1005.772	-0.885	-637.99
Component Flows, LB/HR										
O2	145.90	145.90	9907.00	9907.00	6.83E-01	9907.00		6.83E-01	6.01E-04	4.32E-01
N2	1094.70	494.70	34176.37	34176.37	1.22	34176.37		1.22	1.07E-03	1.72E-01
H2			1.75E-01	1.75E-01	7.87E-06	1.75E-01		7.87E-06	6.93E-09	4.98E-06
CO2										
CO										
NH3			1.80	2.40E-02	1.18	2.40E-02		6.91E-03	6.08E-06	2.25E-03
N2O										
NO			3.22E-04	3.22E-04	7.28E-07	3.22E-04		7.28E-07	6.40E-10	4.60E-07
NO2			2.73E-04	2.73E-04	6.18E-04	2.73E-04		6.18E-04	5.95E-07	4.28E-04
H2O	185.96	4.01E-01	739.34	1117.96	14482.28	1117.96	6.49	14538.77	127.87	91954.24
NAOH										
HCL				1.28E-07	3.65E-02	1.28E-07	3.80	1.35		8.28E-01
H2SO4										
HCLO										
HNO3										
NA2SO4										
NANO2			3.80E-04							
NHAGLYSI					6345.80			6349.49	5.56	4017.84
ALUMINI										
SODIUM FORMATE										
SODIUM ACETATE										
GLYCEROL										
NAALO2										
PCB										
TOTAL PEAK THROUGHPUT, LB/HR	1426.6	641.0	44824.7	45201.5	151161.6	45201.5	10.3	151671.9	133.4	95974.4
TOTAL AVERAGE THROUGHPUT, LB/HR	1426.6	641.0	44822.0	45199.5	150485.6	45199.5	6.8	150992.3	129.3	95546.6

STREAM NUMBER	8522	8523	8524	8525	8526	8527	8528	8529	8530
Description	Makeup Water To Scrubber Tower	Total OTE Condensate Recycled To ENR	EBH Blower Suction	Venturi Scrubbing Liquid	Air Feed To Air Heater	Water Spray To Pre-Catalytic Treatment Unit	Air Feed To Venturi Scrubber	Scrubber Recirculation Liquid To Cooler	Scrubber Recirculation Liquid To Trim Cooler
Temperature, oF	77	92	120	87	77	77	77	87	87
Pressure, PSIA	20	85	15.98	85	14.23	20	14	85	85
Instantaneous Volume Flow, GPM (ACFM)	1.00	0.58	(15031.7)	220.00	(152.0)	0.24	9640.18	385.00	385.00
Density, LB/FT^3	62.208	62.847	0.05	62.977	0.071	47.129	0.071	62.977	62.977
Viscosity, CP	0.764	0.658	0.019	0.688	0.019	1.16	0.019	0.688	0.688
MW			28.397		28.82		28.82		
Enthalpy, MMBTU/HR	-3.413	-0.972	-5.979	-368.459	-0.002	-0.32	-0.153	-636.428	-636.428
Component Flows, LB/HR									
O2		6.01E-04	9907.00	2.50E-01	145.90		9374.83	4.32E-01	4.32E-01
N2		1.08E-03	34176.37	4.46E-01	494.70		31788.03	1.72E-01	1.72E-01
H2		6.93E-09	1.75E-01	2.88E-06				4.98E-06	4.98E-06
CO2									
CO									
NH3		8.11E-06	2.40E-02	2.53E-03				4.31E-03	4.31E-03
N2O									
NO		6.40E-10	3.22E-04	2.67E-07				4.60E-07	4.60E-07
NO2		5.95E-07	2.73E-04	2.48E-04				4.28E-04	4.28E-04
H2O	500.00	146.68	1117.96	53236.66	4.01E-01	46.38	25.75	91954.24	91954.24
NAOH									
HCL			1.28E-07	5.10E-01				8.28E-01	8.28E-01
H2SO4									
HCLO									
HNO3									
NA2SO4									
NANO2									
NHAGLYSI		5.56		2326.09				4017.84	4017.84
ALUMINI									
SODIUM FORMATE									
SODIUM ACETATE									
GLYCEROL									
NAALO2									
PCB									
TOTAL PEAK THROUGHPUT, LB/HR	500.0	146.2	45201.5	55564.1	641.0	46.4	41188.6	95974.4	95974.4
TOTAL AVERAGE THROUGHPUT, LB/HR	500.0	142.1	45199.5	55316.5	641.0	46.4	41179.7	95546.6	95546.6

THIS DRAWING SUPERSEDES DRAWING 24915-07-M5-OGE-00001

NO.	DATE	DESCRIPTION	DR	CK	DL	PE	APPD
1	11-3-04	ISSUED FOR DESIGN (IFD) SHEET REDRAWN	NI	NW	SH	JB	JU
0	7-2-04	ISSUED FOR DESIGN (IFD)	NW	NI	SH	JB	JU

QUALITY ☐ LEVEL 1 ☒ LEVEL 2 ☐ LEVEL 3 ☐ ALL

BECHTEL PARSONS BLUE GRASS
A JOINT VENTURE OF BECHTEL NATIONAL, INC. AND PARSONS INFRASTRUCTURE & TECHNOLOGY GROUP INC.

DOD PROGRAM MANAGER FOR ASSEMBLED CHEMICAL WEAPONS ASSESSMENT EDGEWOOD, MARYLAND

US ARMY ENGINEERING AND SUPPORT CENTER, HUNTSVILLE HUNTSVILLE, ALABAMA

BLUE GRASS CHEMICAL AGENT DESTRUCTION PILOT PLANT PROJECT (BGCAPP)
RICHMOND, KENTUCKY

CONTRACT NO. DAAA09-03-D-0023

MUNITIONS DEMILITARIZATION BUILDING OFFGAS TREATMENT EBH/ENR PROCESS FLOW DIAGRAM

DRAWING NUMBER 24915-07-M5-OTE-00001 | SHEET 4 OF 4 | REV 1

PROFESSIONAL STAMP

DESIGN FILE: DGNSEC01 PLOTTED BY: USER# ON DATE AT SYTMC USING COLOR

07-M5-OTE-1-4.PFZ BGCAPP_E2.BDR

S:\2D\pr\07-M5-OTE-1-4.pfz 11/04/2004 11:19:12 AM

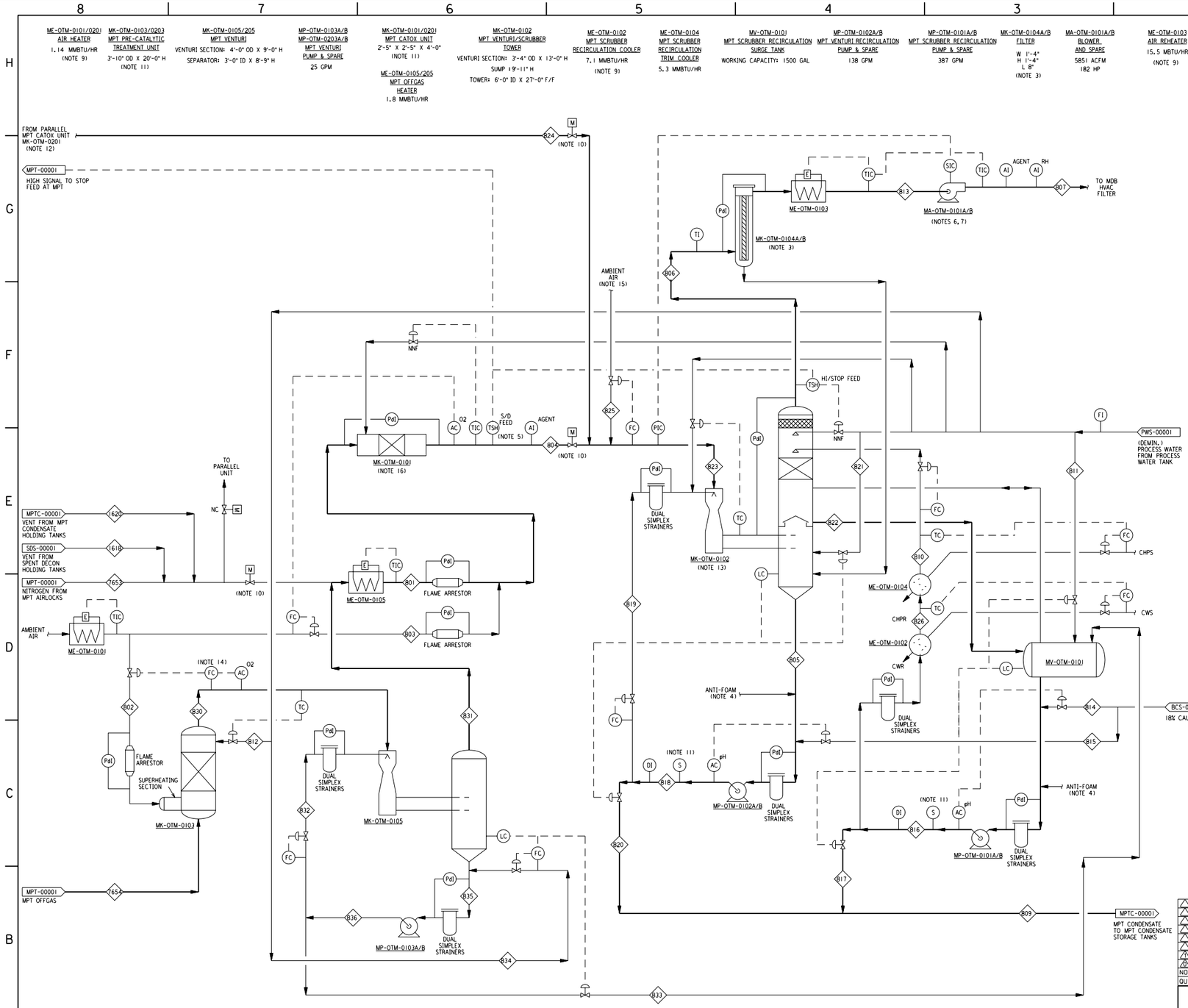

NOTES:

1. FOR SYMBOL DEFINITION SEE DRAWING 24915-00-M5-00-00002.
2. DELETED
3. FILTER TO BE SIZED FOR REMOVAL OF PARTICLES GREATER THAN 0.5 MICRONS.
4. PROVIDE CONNECTION ONLY FOR ANTI-FOAM INJECTION.
5. STOP MPT FEED ON HIGH TEMPERATURE.
6. VARIABLE SPEED DRIVE.
7. EMERGENCY POWER SUPPLY.
8. DELETED
9. MMBTU/HR = 1,000,000 BTU/HR
   MBTU/HR = 1,000 BTU/HR
10. VALVES ARE PROVIDED FOR ISOLATION.
11. DIMENSIONS ARE PRELIMINARY. CATOX SHELL AND PRETREATMENT UNIT WILL BE SIZED BY VENDOR.
12. THE PARALLEL PROCESS TRAINS CONVERGING AT STREAM 823 ARE FUNCTIONALLY IDENTICAL. THE CATOX #2 TRAIN IS NOT SHOWN FOR THE SAKE OF READABILITY.
13. DIMENSIONS ARE PRELIMINARY. THE VENTURI/SCRUBBER TOWER WILL BE SIZED BY VENDOR.
14. THE FLOW CONTROLLER MAINTAINS THE VOLUME RATE TO THE MPT VENTURI (MK-OTM-0105) NO LESS THAN 50% OF DESIGN VALUE AT ALL TIMES DURING OPERATION. THE OXYGEN ANALYZER RESETS THE FLOW CONTROLLER TO ASSURE THAT RESIDUAL OXYGEN LEVEL IN THE PRE-CATALYTIC TREATMENT EFFLUENT IS AT LEAST 4.9%.
15. MAKE-UP AIR IS ADDED, IF NECESSARY, TO ASSURE THAT THE VOLUME RATE TO THE MPT VENTURI/SCRUBBER TOWER IS AT LEAST 35% OF DESIGN VALUE AT ALL TIMES DURING OPERATION.
16. CATOX UNITS SHALL BE INSTALLED WITH FLANGED CONNECTIONS SO THAT THEY CAN BE REPLACED WITH FRESH CATALYST WHENEVER REQUIRED.

THIS DRAWING SUPERSEDES DRAWING 24915-07-M5-OGM-00001

NO.	DATE	DESCRIPTION	DR	CK	DL	PE	APPD
3	10-21-04	ISSUED FOR DESIGN (IFD) SHEET REDRAWN	WW	NI	SH	JB	JU
2	6-11-04	ISSUED FOR DESIGN (IFD)	BC	WW	SH	JB	JU

QUALITY ☒ LEVEL 1 ☒ LEVEL 2 ☐ LEVEL 3 ☐ ALL

BECHTEL PARSONS BLUE GRASS
A JOINT VENTURE OF BECHTEL NATIONAL, INC. AND PARSONS INFRASTRUCTURE & TECHNOLOGY GROUP INC.

DOD PROGRAM MANAGER FOR ASSEMBLED CHEMICAL WEAPONS ASSESSMENT EDGEWOOD, MARYLAND

US ARMY ENGINEERING AND SUPPORT CENTER, HUNTSVILLE HUNTSVILLE, ALABAMA

BLUE GRASS CHEMICAL AGENT DESTRUCTION PILOT PLANT PROJECT (BGCAPP)
RICHMOND, KENTUCKY

CONTRACT NO. DAAA09-03-D-0023

MUNITIONS DEMILITARIZATION BUILDING OFFGAS TREATMENT MPT PROCESS FLOW DIAGRAM

DRAWING NUMBER 24915-07-M5-OTM-00001 | SHEET 1 OF 4 | REV 1

PROFESSIONAL STAMP

DESIGN FILE: DGNSEC01
PLOTTED BY: USER4 ON DATE\\\\\\ AT SYTMC USING COLOR\\\\\\

07-M5-OTM-1-1.PFZ BGCAPP_E2.BDR

S:\2D\pr\07-M5-OTM-1-1.pfz 11/02/2004 07:13:26 AM

NOTES:

1. THE MASS AND ENERGY BALANCES ARE BASED ON 2% HEEL FOR EQUIPMENT SIZING PURPOSES. NO HEEL (0%) IS NOT A CONTROLLING CASE FOR THE OTM DESIGN.

2. THE INSTANTANEOUS FLOW WAS DETERMINED BY THE EVAPORATION RATE OF THE OTM DESIGN.

MATERIAL BALANCE TABLE FOR PFD: 24915-07-M5-OTM-00001
OFF GAS TREATMENT MPT
CASE: AGENT GB, INSTANTANEOUS CASE

STREAM NUMBER	801	802	803	804	805	806	807	809	810	811	812	813	814	815
	MPT Offgas To Pre-Catalytic Treatment	Air To Pre-Catalytic Treatment Unit	Air to CatOx-1	CatOx-1 Effluent	Venturi Scrubber Sump Bottoms	Quench Tower Overhead to Filter	Blower Discharge to HVAC	MPT Condensate to Storage	Recirculation Feed to Quench Tower	Makeup Water to Quench Tower	Water to Pre-Catalytic Treatment Unit	Blower Suction	Caustic to Quench Tower	Caustic to Venturi Scrubber
TEMPERATURE, °F	800	800	800	847	174	12	228	115	70		77	95	77	77
PRESSURE, PSIA	10.10	13.89	13.87	9.19	8.83	8.65	14.23	40.00	55.00		34.25	8.29	20.00	40.00
INSTANTANEOUS FLOW, GPM (ACFM)	(7424.2)	(1917.5)	(552.8)	(9324.4)	137.6	(1841.2)	(1448.4)	14.3	362.7	NNF	4.0	(2005.9)	0.7	
DENSITY, LB/FT3	0.017	0.029	0.029	0.015	62.308	0.044	0.055	61.438	61.877		62.308	0.04	74.678	74.678
VISCOSITY, CP	0.025	0.035	0.035	0.027	0.351	0.018	0.022	0.533	0.788		0.764	0.018	0.410	0.410
MW	22.36	28.65	28.65	22.94		28.76	28.76					28.76		
ENTHALPY, MMBTU/HR	-20.694	0.387	0.111	-20.582	-462.454	-2.094	-1.907	-46.735	-1196.443		-13.623	-2.066	-2.146	
COMPONENT INSTANTAN. FLOW, LB/HR														
GB														
DICDI														
TBA	0.001													
CH2F2	4.592								0.001					
MF	2.70													
DIPDI								0.001	0.03					
IPA														
N2	3005.65	2570.19	739.95	3746.27	0.006	3746.24	3746.24	0.037	1.103			3746.24		
O2	400.84	775.08	223.14	599.82	0.013	599.81	599.81	0.011	0.336			599.81		
H2	0.24													
CO2	322.56			341.95	0.149	341.81	341.81	0.018	0.533			341.81		
CO	0.67													
CH4	3.99													
C2H6	0.001													
NH3	0.03													
NO2				0.001										
NO	1.382			0.002		0.002	0.002					0.002		
N2H4														
HCN	0.006													
SO2														
CL2														
F2														
H2O	3661.2	39.4	11.3	3685.1	71562.8	133.8	133.8	6844.1	173885.1		1996.9	133.8	365.6	0.0
CF4														
F2C2H4														
NAOH					0.12								80.25	
HCL	0.25			0.25										
HF	34.78			39.89										
P2O5								118.7	3571.6					
HNO3														
HCLO														
METAL														
NACL(S)								0.404	12.150					
NANO3(S)								1.31E-03	2.33E-02					
NANO2(S)									1.95E-02					
NAHCO3(S								0.257	7.633					
NAF(S)					0.33			83.84	2521.99					
NA2CO3									0.0159					
NAOH(S)														
TOTAL INSTANTANEOUS FLOW, LB/HR	7,438.9	3,384.6	974.4	8,413.3	71,563.4	4,821.6	4,821.6	7,047.4	180,000.6		1,996.9	4,821.6	445.8	0.030
TOTAL PEAK THROUGHPUT, LB/HR	4,686.1	3,120.5	0.0	4,698.1	71,540.7	13,202.5	13,202.5	2,982.8	180,000.0		300.1	13,202.5	23.1	0.001
TOTAL AVERAGE THROUGHPUT, LB/HR	4,699.6	3,136.0	0.0	4,699.6	71,545.0	13,253.4	13,253.4	2,965.2	180,000.0		292.2	13,253.4	15.8	0.001

STREAM NUMBER	816	817	818	819	820	821	822	823	824	825	826	830
	Quench Recirculation Pump Discharge	Quench Recirculation Condensate to Drain	Venturi Scrubber Recirculation Pump Discharg	Condensate Recirculation return to Scrubber	Scrubber Condensate to Drain	Makeup Supply to Venturi Scrubber	Quench Condensate to Surge Tank	Total Feed to Venturi Scrubber	CatOx-2 Effluent	Make-up Air To Venturi Scrubber Tower	Condensate Recirculation To Trim Cooler	MPT Off Gas To MPT Venturi
TEMPERATURE, °F	105	105	170	170	170	77	102	847		77	100	800
PRESSURE, PSIA	75.00	75.00	40.00	40.00	40.00	40.00	8.74	9.19		14.23	65.00	12.62
INSTANTANEOUS FLOW, GPM (ACFM)	376.9	12.1	143.2	141.1	2.2	5.6	374.7	(9324.4)	NNF		(165.0)	(4470.1)
DENSITY, LB/FT3	61.52	61.52	62.308	62.308	60.794	62.308	61.664	0.015		0.071	63.01	148.859
VISCOSITY, CP	0.577	0.577	0.360	0.360	0.361	0.764	0.592	0.027		0.019	0.627	0.851
MW								22.94		28.65		
ENTHALPY, MMBTU/HR	-1230.125	-39.578	-481.546	-474.389	-7.157	-19.101	-1226.865	-20.582			-1189.728	-14.584
COMPONENT INSTANTAN. FLOW, LB/HR												
GB												
DICDI												
TBA												0.001
CH2F2	0.001						0.001				0.001	4.592
MF												2.695
DIPDI	0.03	0.001					0.025				0.025	0.001
IPA												
N2	1.139	0.037	0.006	0.005			1.137	3746.28		0.00	1.10	2608.00
O2	0.35	0.011	0.013	0.013			0.346	599.82			0.336	400.84
H2												0.239
CO2	0.55	0.018	0.149	0.147			4.673	341.95			0.53	322.573
CO												0.668
CH4												3.994
C2H6												0.001
NH3												0.032
NO2								0.001				
NO								0.002				1.382
N2H4												
HCN												0.006
SO2												
CL2												
F2												
H2O	179665.7	5780.5	71562.9	70499.3	1063.6	2800.0	179174.6	3685.1			173885.1	2427.3
CF4												
F2C2H4												
NAOH			0.12	0.12								
HCL								0.252				0.252
HF	0.00						26.153	39.891			0.002	34.83
P2O5	3690.32	118.731					3571.59				3571.59	118.728
HNO3												
HCLO												
METAL												
NACL(S)	12.554	0.404					12.554				12.150	
NANO3(S)	2.41E-02	1.37E-03					2.41E-02				2.33E-02	
NANO2(S)	1.95E-02						1.95E-02				1.95E-02	
NAHCO3(S	7.882	0.253			0.004		0.004				7.629	
NAF(S)	2605.8	83.839	0.327	0.323	0.004		2550.830				2522.0	
NA2CO3	0.0194										0.0194	
NAOH(S)												
TOTAL INSTANTANEOUS FLOW, LB/HR	185,984.4	5,983.8	71,563.5	70,499.9	1,063.6	2,800.0	185,341.9	8,413.3		0.0	180,000.6	5,926.1
TOTAL PEAK THROUGHPUT, LB/HR	181,942.1	1,942.1	71,540.7	70,500.0	1,040.7	1,800.0	181,703.7	14,146.9		9,448.8	180,000.0	3,690.8
TOTAL AVERAGE THROUGHPUT, LB/HR	181,920.2	1,920.2	71,545.0	70,500.0	1,045.0	1,800.0	181,689.6	14,188.0		9,488.4	180,000.0	3,691.8

STREAM NUMBER	831	832	833	834	835	836	1618	1620	7653
	MPT Venturi Effluent Gas	MPT Venturi Scrubbing Liquid	MPT Venturi Bleed	Make-up Water To MPT Venturi	Vent Gas From SDS Tanks	Vent Gas From MPTC Tanks	Vent Gas From SDS Tanks	Vent Gas From MPTC Tanks	Nitrogen Sweep From MPT Airlocks
TEMPERATURE, °F	147	136	136	77	136	136	77	77	300
PRESSURE, PSIA	10.28	40.00	40.00	40.00	10.28	40.00	14.48	14.48	14.00
INSTANTANEOUS FLOW, GPM (ACFM)	(3347.8)	20.2	0.3	2.6	20.4	20.4	(5.6)	(3.801)	(124.96)
DENSITY, LB/FT3	0.035	92.804	92.804	62.308	92.804	92.804	0.068	0.07	0.048
VISCOSITY, CP	0.011	0.835	0.835	0.764	0.836	0.835	0.018	0.018	0.024
MW	22.11						28.01	28.02	28.01
ENTHALPY, MMBTU/HR	-22.453	-83.45	-1.168	-9.039	-84.619	-84.618			0.02
COMPONENT INSTANTAN. FLOW, LB/HR									
GB									
DICDI									
TBA	0.001								
CH2F2	4.592	0.027			0.027	0.027			
MF	2.695	0.008			0.008	0.008			
DIPDI	0.001	0.059	0.001		0.059	0.059			
IPA									
N2	2608.002	0.132	0.002		0.134	0.13	23.00	14.27	360.376
O2	400.835	0.079	0.001		0.08	0.08			
H2	0.239								
CO2	322.559	1.002	0.014		1.016	1.016			
CO	0.668								
CH4	3.994	0.001			0.001	0.001			
C2H6	0.001								
NH3	0.032	0.001			0.001	0.001			
NO2									
NO	1.382								
N2H4									
HCN	0.006								
SO2									
CL2									
F2									
H2O	3661.2	6510.3	91.1	1325.0	6601.4	6601.4			
CF4									
F2C2H4									
NAOH									
HCL	0.252	0.001			0.001	0.001			
HF	34.78	3.526	0.049		3.576	3.576			
P2O5		8484.86	118.731		8603.589	8603.589			
HNO3									
HCLO									
METAL									
NACL(S)									
NANO3(S)									
NANO2(S)									
NAHCO3(S									
NAF(S)									
NA2CO3									
NAOH(S)									
TOTAL INSTANTANEOUS FLOW, LB/HR	7,041.2	15,000.0	209.9	1,325.0	15,209.9	15,209.9	23.0	14.3	360.4
TOTAL PEAK THROUGHPUT, LB/HR	4,300.5	15,000.0	215.3	825.0	15,215.3	15,215.3	23.0	14.3	360.4
TOTAL AVERAGE THROUGHPUT, LB/HR	4,302.0	15,000.0	214.8	825.0	15,214.8	15,214.8	23.0	14.3	360.4

THIS DRAWING SUPERSEDES DRAWING 24915-07-M5-OGM-00001

NO.	DATE	DESCRIPTION	DR	CK	DL	PE	APPD
2	10-28-04	ISSUED FOR DESIGN (IFD) SHEET REDRAWN	WW	JW	SH	JB	JU
1	6-11-04	ISSUED FOR DESIGN (IFD)	BC	WW	SH	JB	JU

QUALITY ☒ LEVEL 1 ☒ LEVEL 2 ☐ LEVEL 3 ☐ ALL

BECHTEL PARSONS BLUE GRASS
A Joint Venture of Bechtel National, Inc. and Parsons Infrastructure & Technology Group Inc.

DOD PROGRAM MANAGER FOR ASSEMBLED CHEMICAL WEAPONS ASSESSMENT EDGEWOOD, MARYLAND

US ARMY ENGINEERING AND SUPPORT CENTER, HUNTSVILLE HUNTSVILLE, ALABAMA

BLUE GRASS CHEMICAL AGENT DESTRUCTION PILOT PLANT PROJECT (BGCAPP)
RICHMOND, KENTUCKY

CONTRACT NO. DAAA09-03-D-0023

MUNITIONS DEMILITARIZATION BUILDING OFFGAS TREATMENT MPT PROCESS FLOW DIAGRAM

DRAWING NUMBER 24915-07-M5-OTM-00001 | SHEET 2 OF 4 | REV 1

PROFESSIONAL STAMP

07-M5-OTM-1-2.PFZ

BGCAPP_E2.BDR

DESIGN FILE: DONSBERG
PLOTTED BY: USERN ON DATE AT SYTMC USING COLOR

NOTES:

1. THE MASS AND ENERGY BALANCES ARE BASED ON 2% HEEL FOR EQUIPMENT SIZING PURPOSES. NO HEEL (0%) IS NOT A CONTROLLING CASE FOR THE OTM DESIGN.
2. THE INSTANTANEOUS FLOW WAS DETERMINED BY THE EVAPORATION RATE OF THE OTM DESIGN.

MATERIAL BALANCE TABLE FOR PFD: 24915-07-M5-OTM-00001
OFF GAS TREATMENT MPT
CASE: AGENT VX, INSTANTANEOUS CASE

STREAM NUMBER	801	802	803	804	805	806	807	809	810	811	812
	MPT Offgas To Pre-Catalytic Treatment	Air To Pre-Catalytic Treatment Unit	Air to CatOx-1	CatOx-1 Effluent	Venturi Scrubber Sump Bottoms	Scrubber Tower Overhead to Filter	Blower Discharge to HVAC	MPT Condensate to Storage	Recirculation Feed to Scrubber Tower	Makeup Water to Scrubber Tower	Water to Pre-Catalytic Treatment Unit
TEMPERATURE, °F	800	800	800	928	172	91	227	142	70		77
PRESSURE, PSIA	10.10	13.89	14.05	9.19	8.83	8.65	14.23	45.00	38.74		34.25
INSTANTANEOUS FLOW, GPM (ACFM)	(7937.4)	(2152.1)	(1378.3)	(11905.0)	127.2	(5562.7)	(4221.2)	27.9	355.2	NNF	4.3
DENSITY, LB/FT3	0.017	0.029	0.03	0.015	64.74	0.041	0.055	62.40	63.18		62.31
VISCOSITY, CP	0.032	0.035	0.034	0.035	0.888	0.018	0.021	0.449	0.820		1.160
MW	22.60	28.65	28.65	23.81		28.28	28.28				
ENTHALPY, MMBTU/HR	-21.544	0.435	0.282	-21.264	-430.651	-7.418	-6.939	-93.582	-1220.087		-14.895
COMPONENT INSTANTAN. FLOW, LB/HR											
VX											
DICDI											
PYRO									0.002		
R-SH	0.002										
SULFUR											
DIPU											
ETHANOL	0.017								0.001		
N2	3339.13	2884.70	1869.08	5221.17	0.006	10442.29	10442.29	0.05	0.720		
O2	434.96	869.92	563.65	906.85	0.014	1813.69	1813.69	0.02	0.23		
H2	0.23										
CO2	406.33			423.55	0.14	845.93	845.93	0.10	2.13		
CO	0.86										
NH3	15.73					0.003	0.003	0.001	0.020		
NO2				0.002							
NO				0.007		0.015	0.015				
HCN	0.044										
H2S	28.72					0.003	0.003		0.003		
COS	0.43										
SO2				38.92	0.18	0.01	0.01		0.001		
SO3											
CH4	5.63										
C2H6	0.002										
H2O	3809.91	44.20	28.64	3889.1	66908.5	729.02	729.02	13606.0	175875.3		2159.63
NAOH											
H2SO4				23.76	46.45						
HNO3											
P2O5											
METAL											
NANO3(S)								0.0041	0.0494		
NANO2(S)								0.0030	0.0405		
NAHCO3(S)								2.056	27.20		
NA2CO3(S)								0.012	0.055		
NA2SO4(S)					4385.69			68.84	56.06		
NA3PO4(S)								144.15	2007.50		
NA2SO3(S)								111.10	1549.56		
NAHSO3(S)								34.72	481.57		
TOTAL INSTANTANEOUS FLOW, LB/HR	8,042.0	3,798.8	2,461.4	10,503.4	71,341.0	13,831.0	13,831.0	13,967.1	180,000.4		2,159.6
TOTAL PEAK THROUGHPUT, LB/HR	4,663.1	3,149.4	0.0	4,663.1	71,560.0	13,453.4	13,453.4	2,853.8	180,000.0		283.8
TOTAL AVERAGE THROUGHPUT, LB/HR	4,666.6	3,163.5	0.0	4,666.6	71,561.2	13,480.5	13,480.5	2,842.8	180,000.0		277.9

STREAM NUMBER	813	814	815	816	817	818	819	820	821	822	823
	Blower Suction	Caustic To Scrubber Tower	Caustic to Venturi Scrubber	Scrubber Recirculation Pump Discharge	Scrubber Recirculation Condensate to Drain	Venturi Scrubber Recirculation Pump Discharg	Condensate Recirculation return to Scrubber	Scrubber Condensate to Drain	Makeup Supply to Venturi Scrubber	Quench Condensate to Surge Tank	Total Feed to Venturi Scrubber
TEMPERATURE, °F	95	77	77	140	140	164	164	164	77	140	928
PRESSURE, PSIA	8.29	40.00	40.00	58.74	58.74	45.00	45.00	45.00	40.00	8.74	9.19
INSTANTANEOUS FLOW, GPM (ACFM)	(5851.0)	1.8	0.4	386.5	25.9	138.2	136.1	2.0	10.6	384.5	(23812.9)
DENSITY, LB/FT3	0.039	74.68	74.68	62.23	62.23	64.56	64.56	64.39	62.31	62.14	0.015
VISCOSITY, CP	0.018	2.946	2.946	0.448	0.448	0.908	0.908	0.411	1.160	0.450	0.029
MW	28.28										23.81
ENTHALPY, MMBTU/HR	-7.403	-6.963	-1.288	-1294.486	-86.725	-468.563	-461.739	-6.857	-36.634	-1286.285	-42.528
COMPONENT INSTANTAN. FLOW, LB/HR											
VX											
DICDI											
PYRO				0.002						0.002	
R-SH											
SULFUR											
DIPU											
ETHANOL				0.001						0.001	
N2	10442.29			0.772	0.052	0.006	0.005			0.771	10442.35
O2	1813.69			0.24	0.016	0.014	0.014			0.241	1813.70
H2											
CO2	845.93			1.39	0.093	0.136	0.134			2.215	847.10
CO											
NH3	0.003			0.021	0.001					0.017	
NO2											0.004
NO	0.015										0.015
HCN											
H2S	0.003			0.003							
COS											
SO2	0.009			0.002		0.182	0.179			0.006	77.848
SO3											
CH4											
C2H6											
H2O	729.02	877.40	166.30	188503.8	12628.93	67091.3	66114.2	977.074	5311.5	187419.3	7778.2
NAOH		192.61	36.50	0.016						0.009	
H2SO4						1.73	46.45				47.528
HNO3											
P2O5											
METAL											
NANO3(S)				0.0521	0.0041					0.0521	
NANO2(S)				0.0420	0.0030					0.0420	
NAHCO3(S)				30.7661	2.0611			0.0028		29.2365	
NA2CO3(S)				0.175	0.012					0.097	
NA2SO4(S)				60.087	4.025	4450.50	4385.69	64.814		60.087	
NA3PO4(S)				2151.65	144.15					2007.50	
NA2SO3(S)				1658.08	111.08			0.0031		1386.08	
NAHSO3(S)				518.4208	34.7320			0.0013		742.9659	
TOTAL INSTANTANEOUS FLOW, LB/HR	13,831.0	1,070.0	202.8	192,925.6	12,925.2	71,543.8	70,546.7	1,041.9	5,311.5	191,648.6	21,006.7
TOTAL PEAK THROUGHPUT, LB/HR	13,453.4	8.2	4.4	181,789.4	1,789.4	71,564.5	70,500.0	1,064.5	1,750.0	181,570.7	14,334.1
TOTAL AVERAGE THROUGHPUT, LB/HR	13,480.5	6.0	3.2	181,778.4	1,778.4	71,564.5	70,500.0	1,064.5	1,750.0	181,561.9	14,353.6

STREAM NUMBER	824	825	826	830	831	832	833	834	1618	1620	7653	7654
	CatOx-2 Effluent	Make-up Air To Venturi Scrubber Tower	Condensate Recirculation To Trim Cooler	MPT Off Gas To MPT Venturi	MPT Venturi Effluent Gas	MPT Venturi Scrubbing Liquid	MPT Venturi Bleed	Make-up Water To MPT Venturi	Vent Gas From SDS Tanks	Vent Gas From MPTC Tanks	Nitrogen Swee From MPT Airlocks	MPT Offgas
TEMPERATURE, °F	928	77	100	800	164	145	145	77	77	77	300	1046
PRESSURE, PSIA	9.19	14.23	48.74	12.62	10.28	45.00	45.00	40.00	14.48	14.00	14.00	14.00
INSTANTANEOUS FLOW, GPM (ACFM)	(11905.0)		357.0	(4909.9)	(3698.1)	24.8	0.3	2.7	(5.6)	(3.8)	(125.0)	MIXED
DENSITY, LB/FT3	0.015	0.071	62.87	0.022	0.034	75.55	75.55	62.31	0.07	0.068	0.048	0.016
VISCOSITY, CP	0.035	0.019	0.622	0.027	0.011	1.116	1.116	1.160	0.018	0.018	0.024	0.026
MW	23.81	28.65		23.63	22.38				28.02	28.02	28.01	18.17
ENTHALPY, MMBTU/HR	-21.264		-1214.829	-15.337	-23.378	-91.887	-1.268	-9.311			0.02	-1.283
COMPONENT INSTANTAN. FLOW, LB/HR												
VX												
DICDI												
PYRO			0.002			0.011						
R-SH				0.002	0.002							0.002
SULFUR												
DIPU												
ETHANOL			0.001	0.017	0.017	0.006						0.017
N2	5221.17	0.00	0.72	2942.57	2942.568	0.04	0.001		23.0	13.19	360.38	57.872
O2	906.85		0.226	434.96	434.959	0.034						
H2				0.234	0.234							23.424
CO2	423.55		1.60	406.338	406.33	0.576	0.008					132.984
CO				0.864	0.864							86.411
NH3			0.02	15.735	15.731	0.329	0.005					15.735
NO2	0.002											
NO	0.007											
HCN				0.044	0.044	0.001						0.044
H2S			0.003	28.725	28.722	0.219	0.003					28.725
COS				0.428	0.428	0.001						0.428
SO2	38.924		0.002									
SO3												
CH4				5.628	5.628	0.001						56.276
C2H6				0.002	0.002							0.002
H2O	3889.09		175875.04	2604.46	3809.91	10476.36	144.551	1350.0				79.642
NAOH												
H2SO4	23.76											
HNO3												
P2O5				62.40		4522.42	62.4					62.398
METAL												
NANO3(S)			0.0494									
NANO2(S)			0.0405									
NAHCO3(S)			28.1874									
NA2CO3(S)			0.097									
NA2SO4(S)			56.061									
NA3PO4(S)			2007.50									
NA2SO3(S)			1547.97									
NAHSO3(S)			482.8852									
TOTAL INSTANTANEOUS FLOW, LB/HR	10,503.4	0.0	180,000.4	6,502.4	7,645.4	15,000.0	207.0	1,350.0	23.0	13.2	360.4	544.0
TOTAL PEAK THROUGHPUT, LB/HR	4,663.1	9,671.0	180,000.0	3,697.0	4,266.6	15,000.0	210.5	780.0	23.0	13.2	360.4	263.8
TOTAL AVERAGE THROUGHPUT, LB/HR	4,666.6	9,686.9	180,000.0	3,700.6	4,270.1	15,000.0	210.5	780.0	23.0	13.2	360.4	259.2

THIS DRAWING SUPERSEDES DRAWING 24915-07-M5-QGM-00001

NO.	DATE	DESCRIPTION	DR	CK	DL	PE	APPD
1	10-28-04	ISSUED FOR DESIGN (IFD) SHEET REDRAWN	WW	NI	SH	JB	JU
0	6-11-04	ISSUED FOR DESIGN (IFD)	BC	WW	SH	JB	JU

QUALITY ☒ LEVEL 1 ☒ LEVEL 2 ☐ LEVEL 3 ☐ ALL

BECHTEL PARSONS BLUE GRASS
A Joint Venture of Bechtel National, INC. and Parsons Infrastructure & Technology Group Inc.

DOD PROGRAM MANAGER FOR ASSEMBLED CHEMICAL WEAPONS ASSESSMENT EDGEWOOD, MARYLAND

US ARMY ENGINEERING AND SUPPORT CENTER, HUNTSVILLE HUNTSVILLE, ALABAMA

BLUE GRASS CHEMICAL AGENT DESTRUCTION PILOT PLANT PROJECT (BGCAPP)
RICHMOND, KENTUCKY

CONTRACT NO. DAAA09-03-D-0023

MUNITIONS DEMILITARIZATION BUILDING OFFGAS TREATMENT MPT PROCESS FLOW DIAGRAM

PROFESSIONAL STAMP

DRAWING NUMBER 24915-07-M5-OTM-00001 SHEET 3 OF 4 REV 1

07-M5-OTM-1-3.PFZ BGCAPP_E2.BDR

DESIGN FILE: DGNSPEC$$
PLOTTED BY: USER$ ON DATE$$$$$$$ AT SYTIME USING COLOR$$$

NOTES:

1. THE MASS AND ENERGY BALANCES ARE BASED ON 2% HEEL FOR EQUIPMENT SIZING PURPOSES. NO HEEL (0%) IS NOT A CONTROLLING CASE FOR THE OTM DESIGN.
2. THE INSTANTANEOUS FLOW WAS DETERMINED BY THE EVAPORATION RATE OF THE OTM DESIGN.

MATERIAL BALANCE TABLE FOR PFD: 24915-07-M5-OTM-00001
OFF GAS TREATMENT MPT
CASE: AGENT H, INSTANTANEOUS CASE

STREAM NUMBER	801	802	803	804	805	806	807	809	810	811	812	813
	MPT Offgas To Pre-Catalytic Treatment	Air To Pre-Catalytic Treatment Unit	Air to CatOx-I	CatOx-I Effluent	Venturi Scrubber Sump Bottoms	Scrubber Tower Overhead to Filter	Blower Discharge to HVAC	MPT Condensate to Storage	Recirculation Feed to Scrubber Tower	Makeup Water to Scrubber Tower	Water to Pre-Catalytic Treatment Unit	Blower Suction
TEMPERATURE, °F	800	800	800	986	147	72	229	101	70		77	95
PRESSURE, PSIA	10.10	13.89	13.87	9.19	8.83	8.65	14.23	45.00	25.00		34.25	8.29
INSTANTANEOUS FLOW, GPM (ACFM)	(4153.0)	(1234.2)	(293.9)	(5722.0)	139.0	(3660.3)	(2888.2)	9.1	342.1	NNF	1.6	(3990.3)
DENSITY, LB/FT3	0.018	0.029	0.029	0.014	62.308	0.043	0.055	64.577	65.597		62.308	0.04
VISCOSITY, CP	0.032	0.035	0.035	0.036	0.754	0.018	0.022	0.637	0.858		1.160	0.019
MW	23.67	28.65	28.65	24.19		28.43	28.43					28.43
ENTHALPY, MMBTU/HR	-9.246	0.249	0.059	-9.187	-473.563	-2.117	-1.745	-31.289	-1191.124		-5.469	-2.062
COMPONENT INSTANTAN. FLOW, LB/HR												
N2	2120.78	1654.35	393.38	2514.16	0.006	7226.47	7226.47	0.018	0.88			7226.47
O2	365.26	498.89	118.63	416.80	0.028	1837.855	1837.855	0.009	0.434			1837.855
H2	0.140											
CO2	152.94			154.342	0.060	154.124	154.124	0.019	1.48			154.124
CO	0.23											
NH3												
NO2				0.001								
NO				0.006		0.006	0.006					0.006
N2H4												
HCN												
H2S	45.66					0.002	0.002		0.002			0.002
COS	0.304											
SO2				86.14	0.56	0.007	0.007		0.002			0.007
SO3												
CL2				0.53	0.001	0.004	0.004					0.004
CH4	0.297											
C2H6												
H2O	1671.0	25.3	6.03	1703.2	71464.7	261.5	261.5	4474.6	168340.8		793.0	261.5
NAOH					0.485							
HCL	49.02			48.48								
HCLO				0.003		0.350	0.350	0.030	1.2240			0.35
HNO3												
NANO3								1.37E-03	4.80E-02			
NANO2								1.50E-03	3.90E-02			
METAL												
NAOH(S)												
NACL(S)					0.09			78.2	3749.6			
NAHCO3(S)								0.38	16.98			
NA2CO3(S)								0.002	0.064			
NAHSO3(S)								23.739	1137.544			
NA2SO3(S)								140.692	6751.206			
TOTAL INSTANTANEOUS FLOW, LB/HR	4,405.6	2,178.6	518.0	4,923.6	71,465.9	9,480.3	9,480.3	4,717.6	180,000.3		793.0	9,480.3
TOTAL PEAK THROUGHPUT, LB/HR	4,662.0	3,156.7	0.0	4,662.0	71,469.7	13,423.8	13,423.8	2,840.4	180,000.0		280.6	13,423.8
TOTAL AVERAGE THROUGHPUT, LB/HR	4,668.2	3,171.3	0.0	4,668.2	71,466.6	13,456.3	13,456.3	2,820.7	180,000.0		273.9	13,456.3

STREAM NUMBER	814	815	816	817	818	819	820	821	822	823	824	825
	Caustic to Quench Tower	Caustic to Venturi Scrubber	Scrubber Recirculation Pump Discharge	Scrubber Recirculation Condensate to Drain	Venturi Scrubber Recirculation Pump Discharg	Condensate Recirculation return to Venturi	Scrubber Condensate to Drain	Makeup Water to Venturi Scrubber	Quench Condensate to Surge Tank	Total Feed to Venturi Scrubber	CatOx-2 Effluent	Make-up Air To Venturi Scrubber Tower
TEMPERATURE, °F	77	77	89	89	145	145	145	77	88	549		77
PRESSURE, PSIA	20.00	20.00	45.00	45.00	45.00	45.00	45.00	20.00	8.74	9.19		14.23
INSTANTANEOUS FLOW, GPM (ACFM)	1.4	9.35E-04	350.2	7.2	143.0	141.1	1.9	4.0	348.9	(8250.1)	NNF	(1461.1)
DENSITY, LB/FT3	74.678	74.678	65.419	65.419	62.308	62.308	62.308	62.308	65.286	0.022		0.071
VISCOSITY, CP	2.946	2.946	0.720	0.720	0.762	0.762	0.762	1.160	0.724	0.026		0.019
MW										26.49		28.65
ENTHALPY, MMBTU/HR	-5.499		-1212.788	-24.762	-487.347	-480.76	-6.587	-13.794	-1205.808	-9.605		-0.418
COMPONENT INSTANTAN. FLOW, LB/HR												
N2			0.90	0.018	0.006	0.006			0.901	7226.489		4712.329
O2			0.443	0.009	0.028	0.028			0.443	1837.864		1421.067
H2												
CO2			1.19	0.024	0.06	0.06	0.001		1.68	154.342		
CO												
NH3												
NO2										0.001		
NO										0.006		
N2H4												
HCN												
H2S			0.002									
COS												
SO2			0.002		0.56	0.55	0.008		0.004	86.14		
SO3												
CL2					0.001	0.001				0.526		
CH4												
C2H6												
H2O	692.9	0.034	171849.4	3508.7	71464.7	70498.8	965.9	2000.0	170864.4	1775.4		72.2
NAOH	152.11	0.008			0.492	0.487	0.008					
HCL							0.001			48.478		
HCLO			1.1140	0.0230					1.3780	0.003		
HNO3												
NANO3			4.94E-02	1.37E-03					4.94E-02			
NANO2			4.05E-02	1.50E-03					4.05E-02			
METAL												
NAOH(S)												
NACL(S)			3827.8	78.2	0.09	0.09			3827.8			
NAHCO3(S)			17.93	0.37					17.01			
NA2CO3(S)			0.095	0.002					0.062			
NAHSO3(S)			1162.319	23.731					1556.320			
NA2SO3(S)			6890.627	140.688					6413.358			
TOTAL INSTANTANEOUS FLOW, LB/HR	845.0	0.042	183,751.8	3,751.7	71,465.9	70,500.0	965.9	2,000.0	182,683.4	11,129.2		6,205.6
TOTAL PEAK THROUGHPUT, LB/HR	29.0	0.001	181,870.6	1,870.6	71,469.7	70,500.0	969.7	1,700.0	181,609.6	14,304.1		9,642.1
TOTAL AVERAGE THROUGHPUT, LB/HR	19.1	0.0010	181,854.1	1,854.1	71,466.6	70,500.0	966.6	1,700.0	181,605.7	14,329.2		9,661.0

STREAM NUMBER	826	830	831	832	833	834	835	836	1618	1620	7653	7654
	Condensate Recirculation To Trim Cooler	MPT Off Gas To MPT Venturi	MPT Venturi Effluent Gas	MPT Venturi Scrubbing Liquid	MPT Venturi Bleed	Make-up Water To MPT Venturi	MPT Venturi Pump Suction	MPT Venturi Pump Discharge	Vent Gas From SDS Tanks	Vent Gas From MPTC Tanks	Nitrogen Swee From MPT Airlocks	MPT Offgas
TEMPERATURE, °F	100	800	172	167	167	77	167	167	77	77	300	1003
PRESSURE, PSIA	35.00	12.62	10.28	45.00	45.00	40.00	10.28	45.00	14.48	14.48	14.23	14.00
INSTANTANEOUS FLOW, GPM (ACFM)	336.6	(2500.1)	(1887.8)	30.0	0.4	1.6	30.5	30.5	(5.6)	(1.2)	(125.0)	(446.0)
DENSITY, LB/FT3	62.309	0.023	0.035	62.308	62.308	62.308	62.308	62.308	0.07	0.07	0.049	0.017
VISCOSITY, CP	0.995	0.028	0.013	0.674	0.674	1.160	0.674	0.674	0.018	0.018	0.024	0.026
MW		24.52	23.31						28.02	28.02	28.01	19.44
ENTHALPY, MMBTU/HR	-1115.148	-6.186	-10.181	-101.895	-1.52	-5.518	-103.418	-103.416			0.02	-1.2
COMPONENT INSTANTAN. FLOW, LB/HR												
N2	0.882	1726.779	1726.779	0.002			0.002	0.002	23.0	4.71	366.295	72.43
O2	0.434	365.259	365.259	0.005			0.005	0.005				
H2		0.14	0.14									13.991
CO2	1.162	152.942	152.942	0.043	0.001		0.044	0.044				109.756
CO		0.23	0.23									23.047
NH3												
NO2												
NO												
N2H4												
HCN												
H2S	0.002	45.657	45.655	0.11	0.002		0.112	0.112				45.657
COS		0.30	0.30									0.3
SO2	0.002											
SO3												
CL2												
CH4		0.297	0.297									2.972
C2H6												
H2O	168340.7	1094.8	1671.0	14999.8	223.8	800.0	15223.6	15223.6				146.7
NAOH												
HCL		49.022	49.02	0.04	0.001		0.041	0.041				49.022
HCLO	1.091											
HNO3												
NANO3	4.80E-02											
NANO2	3.90E-02											
METAL												
NAOH(S)												
NACL(S)	3749.6											
NAHCO3(S)	17.56											
NA2CO3(S)	0.094											
NAHSO3(S)	1138.587											
NA2SO3(S)	6749.941											
TOTAL INSTANTANEOUS FLOW, LB/HR	180,000.2	3,435.4	4,011.6	15,000.0	223.8	800.0	15,223.8	15,223.8	23.0	4.7	366.3	463.8
TOTAL PEAK THROUGHPUT, LB/HR	180,000.0	3,700.0	4,268.0	15,000.0	232.0	800.0	15,232.0	15,232.0	23.0	4.7	366.3	262.7
TOTAL AVERAGE THROUGHPUT, LB/HR	180,000.0	3,703.6	4,274.2	15,000.0	229.3	800.0	15,229.3	15,229.3	23.0	4.7	366.3	258.4

THIS DRAWING SUPERSEDES DRAWING 24915-07-M5-QGM-00001

NO.	DATE	DESCRIPTION	DR	CK	DL	PE	APPD
1	10-28-04	ISSUED FOR DESIGN (IFD) SHEET REDRAWN	WW	FJ	SH	JB	JU
0	6-11-04	ISSUED FOR DESIGN (IFD)	BC	WW	SH	JB	JU

QUALITY ☒ LEVEL 1 ☒ LEVEL 2 ☐ LEVEL 3 ☐ ALL

BECHTEL PARSONS BLUE GRASS
A Joint Venture of Bechtel National, INC. and Parsons Infrastructure & Technology Group Inc.

DOD PROGRAM MANAGER FOR ASSEMBLED CHEMICAL WEAPONS ASSESSMENT EDGEWOOD, MARYLAND

US ARMY ENGINEERING AND SUPPORT CENTER, HUNTSVILLE HUNTSVILLE, ALABAMA

BLUE GRASS CHEMICAL AGENT DESTRUCTION PILOT PLANT PROJECT (BGCAPP)
RICHMOND, KENTUCKY

CONTRACT NO. DAAA09-03-D-0023

MUNITIONS DEMILITARIZATION BUILDING OFFGAS TREATMENT MPT PROCESS FLOW DIAGRAM

PROFESSIONAL STAMP

DRAWING NUMBER 24915-07-M5-OTM-00001 | SHEET 4 OF 4 | REV 1

07-M5-OTM-1-4.PFZ BGCAPP_E2.BDR

DESIGN FILE: DGNSPEC$$$
PLOTTED BY: USER$ ON DATE$$$$$$$$ AT SYTIME USING COLOR$$

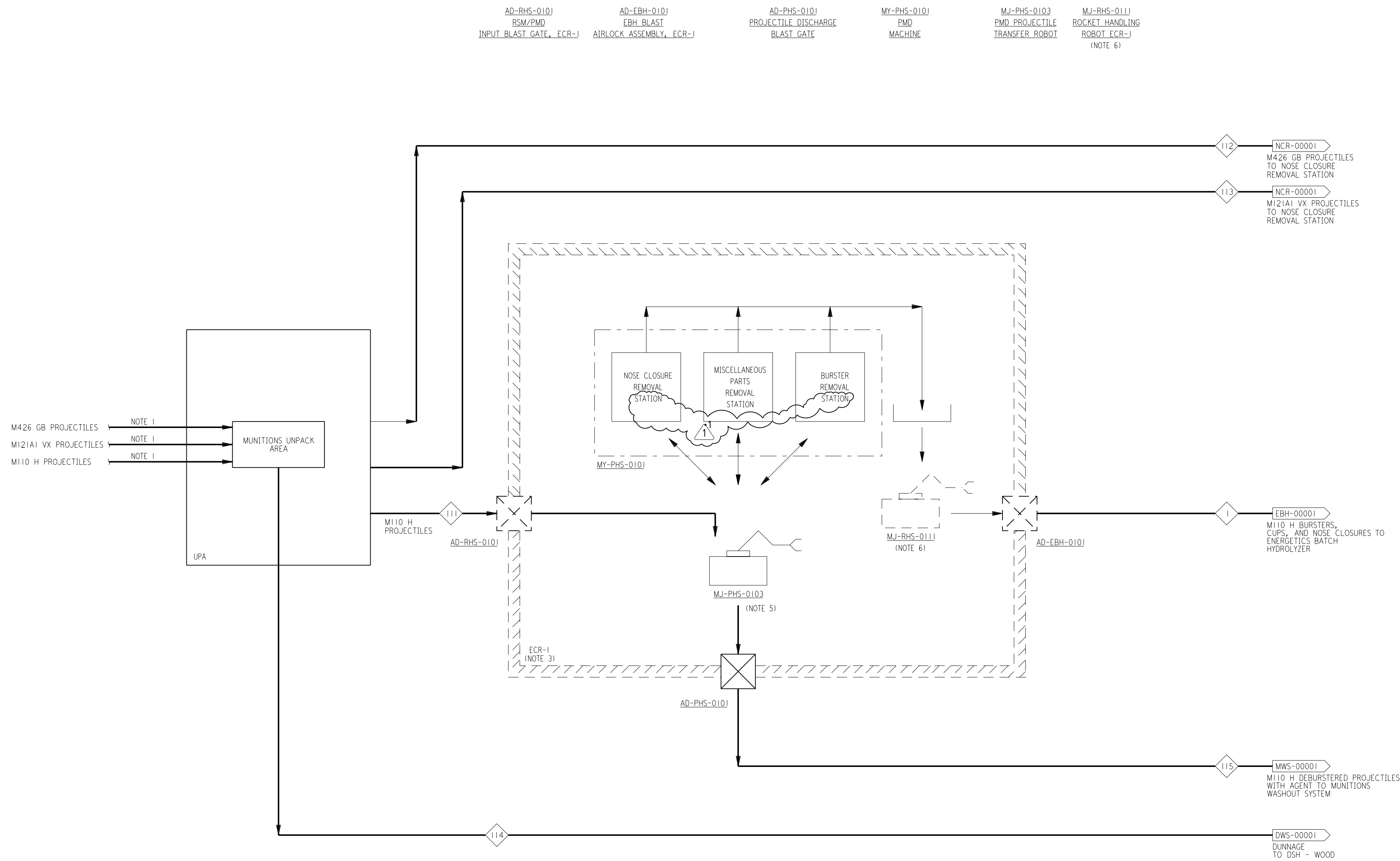

NOTES:

1. THERE ARE THREE TYPES OF PROJECTILES AT THE BLUEGRASS FACILITY: M110 H BURSTERED PROJECTILES, M426 GB DEBURSTERED PROJECTILES AND M121A1 VX DEBURSTERED PROJECTILES. EACH TYPE OF PROJECTILE WILL BE DEMILITARIZED IN A SEPARATE CAMPAIGN.
2. PROJECTILE DEMILITARIZATION MACHINE IS LOCATED WITHIN AN EXPLOSION CONTAINMENT ROOM (ECR).
3. ECR-1 WILL BE MODIFIED AND WILL HOUSE ONE PMD MACHINE FOR "H" CAMPAIGN ONLY.
4. FOR SYMBOL DEFINITION SEE DRAWING 24915-00-M5-00-00002.
5. PROJECTILE TRANSFER ROBOT WILL TRANSFER THE M110 H PROJECTILES TO NOSE CLOSURE REMOVAL STATION, MISCELLANEOUS PARTS REMOVAL STATION AND BURSTER REMOVAL STATION IN SEQUENCE. NOSE CLOSURES, CUPS AND BURSTERS WILL BE COLLECTED, PUT IN A BUCKET AND TRANSFERRED TO THE ENERGETICS BATCH HYDROLYZER.
6. ROCKET HANDLING ROBOT WILL BE REPROGRAMMED TO TRANSFER THE BUCKET, WHICH CONTAINS NOSE CLOSURES, CUPS AND BURSTERS, TO THE ECR BLAST AIRLOCK.

THIS DRAWING SUPERSEDES DRAWING 24915-07-M5-HHP-00001

NO.	DATE	DESCRIPTION	DR	CK	DL	PE	APPD
1	9-30-04	ISSUED FOR DESIGN (IFD)	PC	NI	SH	JB	JU
0	6-11-04	ISSUED FOR DESIGN (IFD)	PC	NI	SH	JB	JU

QUALITY ☐ LEVEL 1 ☐ LEVEL 2 ☒ LEVEL 3 ☐ ALL

BECHTEL PARSONS BLUE GRASS — A Joint Venture of Bechtel National, INC. and Parsons Infrastructure & Technology Group Inc.

DOD PROGRAM MANAGER FOR ASSEMBLED CHEMICAL WEAPONS ASSESSMENT EDGEWOOD, MARYLAND

US ARMY ENGINEERING AND SUPPORT CENTER, HUNTSVILLE HUNTSVILLE, ALABAMA

BLUE GRASS CHEMICAL AGENT DESTRUCTION PILOT PLANT PROJECT (BGCAPP)
RICHMOND, KENTUCKY

CONTRACT NO. DAAA09-03-D-0023

MUNITIONS DEMILITARIZATION BUILDING PROJECTILE DEMILITARIZATION PROCESS FLOW DIAGRAM

DRAWING NUMBER 24915-07-M5-PHS-00001 | SHEET 1 OF 2 | REV 1

PROFESSIONAL STAMP

07-M5-PHS-1-1.PFZ BGCAPP_E2.BDR

DESIGN FILE: DGNSPEC$$$
PLOTTED BY: USER$ ON DATE$$$$$$$$ AT SYTIME USING COLOR$$$

S:\2D\pr\07-M5-PHS-1-1.pfz 10/05/2004 05:03:42 PM

MATERIAL BALANCE TABLE FOR PFD: 24915-07-M5-PHS-00001
PROJECTILE DEMILITARIZATION MACHINE: CASE AGENT H

PEAK CASE

STREAM NUMBER	1	111	112	113	114A	114B	115
DESCRIPTION	M110 H BURSTERS & NOSE CLOSURES TO EBH	H PROJECTILES	GB PROJECTILES	VX PROJECTILES	H / VX PACKING MATERIALS TO DSH	GB- PACKING MATERIALS TO DSH	H PROJECTILES W/ AGENT TO MWS
TEMPERATURE, F	77	77	77	77	77	77	77
PRESSURE, PSIA							
MUNITIONS/ HOUR		26	15	26			26
GPM, INSTANTANEOUS FLOW	-	-	-	-	-	-	-
DENSITY, LB/FT3	-	-	-	-	-	-	-
VISCOSITY, cP	-	-	-	-	-	-	-
MOLECULAR WEIGHT	-	-	-	-	-	-	-
ENTHALPY, MMBTU/HR	-	-	-	-	-	-	-
COMPONENT FLOWS, LB/HR							
GB			217.50				
VX				156.00			
H		304.20					304.20
ENERGETIC	10.66	10.66					
WATER					21.84	25.15	
STEEL	45.50	2188.4	2624.3	2353.0			2142.9
ALUMINUM	1.56	1.56					
HYDROGEN (VAPOR)		0.021					0.021
ETHANE (VAPOR)		0.002	TRACE	TRACE			0.002
VOCs (VAPOR)		0.002	TRACE	TRACE			0.002
WOOD					87.36	100.60	
NAILS					3.25	2.50	
TOTAL PEAK, LB/HR	57.72	2504.9	2841.8	2509.0	112.45	128.25	2447.1
AVG THROUGHPUT, LB/HR	37.96	1647.4	2065.0	1833.5	73.96 / 82.18	93.20	1609.5
NOTES		1	1	1	2, 3, 4, 5	2, 3, 5	

1 2

NOTES:

1. EACH TYPE OF PROJECTILE WILL BE DEMILITARIZED IN A SEPARATE CAMPAIGN.
2. PACKING MATERIALS FLOW RATE FOR M121A1 VX OR M110 H IS SHOWN ON STREAM 114A, WHILE PACKING MATERIALS FLOW RATE FOR M426 GB IS SHOWN ON STREAM 114B.
3. ONLY POTENTIALLY CONTAMINATED WOOD WILL BE PROCESSED IN DSH.
4. AVERAGE THROUGHPUT RATES FOR PACKING MATERIALS TO DSH ARE 73.96 LB/HR FOR H PROJECTILES AND 82.18 LB/HR FOR VX PROJECTILES. (1 1)
5. PALLET AVERAGE WOOD MOISTURE CONTENT SHOULD BE ASSUMED TO BE 20 WEIGHT PERCENT ON A WET BASIS.

THIS DRAWING SUPERSEDES DRAWING 24915-07-M5-HHP-00001

NO.	DATE	DESCRIPTION	DR	CK	DL	PE	APPD
1	10-5-04	ISSUED FOR DESIGN (IFD)	PC	NI	SH	JB	JU
0	6-11-04	ISSUED FOR DESIGN (IFD)	PC	NI	SH	JB	JU

QUALITY ☐ LEVEL 1 ☐ LEVEL 2 ☒ LEVEL 3 ☐ ALL

BECHTEL PARSONS BLUE GRASS
A Joint Venture of Bechtel National, INC. and Parsons Infrastructure & Technology Group Inc.

DOD PROGRAM MANAGER FOR ASSEMBLED CHEMICAL WEAPONS ASSESSMENT EDGEWOOD, MARYLAND

US ARMY ENGINEERING AND SUPPORT CENTER, HUNTSVILLE HUNTSVILLE, ALABAMA

BLUE GRASS CHEMICAL AGENT DESTRUCTION PILOT PLANT PROJECT (BGCAPP)
RICHMOND, KENTUCKY

CONTRACT NO. DAAA09-03-D-0023

MUNITIONS DEMILITARIZATION BUILDING PROJECTILE DEMILITARIZATION PROCESS FLOW DIAGRAM

PROFESSIONAL STAMP

DRAWING NUMBER 24915-07-M5-PHS-00001 SHEET 2 OF 2 REV 1

07-M5-PHS-1-2.PFZ BGCAPP_E2.BDR

DESIGN FILE: DGNSPEC$$$
PLOTTED BY: USER$ ON DATE$$$$$$$$ AT SYTIME USING COLOR$$

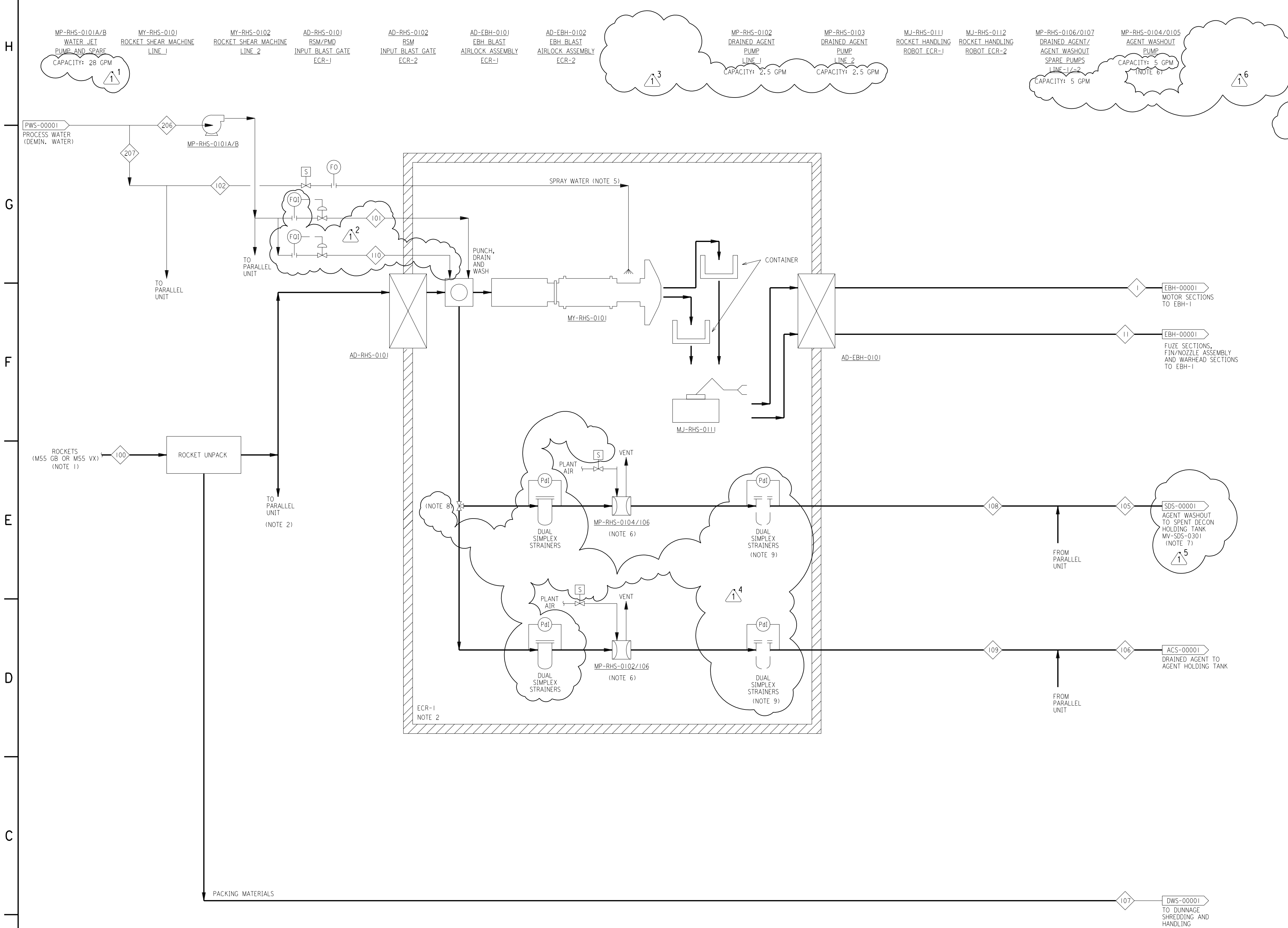

NOTES:

1. THERE ARE TWO TYPES OF ROCKETS AT THE BLUEGRASS FACILITY: M55 GB AND M55 VX. EACH TYPE OF ROCKET WILL BE DEMILITARIZED IN A SEPARATE CAMPAIGN.
2. MUNITIONS DEMILITARIZATION EQUIPMENT IS LOCATED WITHIN AN EXPLOSION CONTAINMENT ROOM (ECR). ECR-1 AND -2 EACH CONTAIN ONE RSM.
3. FOR SYMBOL DEFINITION SEE DRAWING 24915-00-M5-00-00002.
4. DELETED
5. WATER SPRAY WILL BE ON AT 3.5 GPM FOR ABOUT FIVE SECONDS DURING ROCKET CUTTING.
6. MP-RHS-0106 IS THE COMMON SPARE FOR DRAINED AGENT PUMP AND AGENT WASHOUT PUMP IN LINE 1. MP-RHS-0107 IS THE COMMON SPARE FOR LINE 2.
7. MV-SDS-0301 IS USED TO STORE AGENT WASHOUT SOLUTION DURING OPERATION.
8. THREE WAY VALVE IS UNDER TIMER CONTROL TO SWITCH BETWEEN DRAINED AGENT LINE AND AGENT WASHOUT LINE. RESPECTIVE PUMPS ARE TURNED ON AND OFF PROIR TO AND FOLLOWING THE VALVE SWITCHING. FORE AND AFT RINSE VALVES ARE OPENED WHEN THR THREE-WAY VALVE SWITCHES TO THE AGENT WASHOUT LINE AND CLOSED AFTER A PRESET VOLUME OF RINSE WATER.
9. PROVISION SHALL BE MADE FOR INSTALLING RSM LINE 2 PUMP DISCHARGE STRAINERS FOR GB CAMPAIGN IN ECR-2. THERE IS NO DISCHARGE STRAINER ON RSM LINE 1. FOR VX CAMPAIGN, RSM LINE 2 DISCHARGE STRAINERS WILL BE REPLACED BY SPOOL PIECE FOR CONNECTIONS.

THIS DRAWING SUPERSEDES DRAWING 24915-07-M5-HHR-00001

NO.	DATE	DESCRIPTION	DR	CK	DL	PE	APPD
1	9-30-04	ISSUED FOR DESIGN (IFD)	PC	NI	SH	JB	JU
0	6-11-04	ISSUED FOR DESIGN (IFD)	PC	NI	SH	JB	JU

QUALITY ☒ LEVEL 1 ☐ LEVEL 2 ☐ LEVEL 3 ☐ ALL

BECHTEL PARSONS BLUE GRASS
A Joint Venture of Bechtel National, INC. and Parsons Infrastructure & Technology Group Inc.

DOD PROGRAM MANAGER FOR ASSEMBLED CHEMICAL WEAPONS ASSESSMENT EDGEWOOD, MARYLAND

US ARMY ENGINEERING AND SUPPORT CENTER, HUNTSVILLE HUNTSVILLE, ALABAMA

BLUE GRASS CHEMICAL AGENT DESTRUCTION PILOT PLANT PROJECT (BGCAPP)
RICHMOND, KENTUCKY

CONTRACT NO. DAAA09-03-D-0023

MUNITIONS DEMILITARIZATION BUILDING ROCKET SHEAR MACHINE PROCESS FLOW DIAGRAM

PROFESSIONAL STAMP

DRAWING NUMBER 24915-07-M5-RHS-00001 | SHEET 1 OF 2 | REV 1

07-M5-RHS-1-1.PFZ BGCAPP_E2.BDR

DESIGN FILE: DGNSPEC$$$
PLOTTED BY: USER$ ON DATE$$$$$$$ AT SYTIME USING COLOR$$

S:\2D\pr\07-M5-RHS-1-1.pfz 10/05/2004 05:04:53 PM

MATERIAL BALANCE TABLE FOR PFD: 24915-07-M5-RHS-00001
ROCKET SHEAR MACHINE : CASE AGENT GB CO-PROCESSING (0 WT% AGENT HEEL TO EBH)

PEAK CASE

STREAM NUMBER	1	11	100	101	102	105	106	107	108	109	110	206	207
DESCRIPTION	SHEARED ROCKET MOTORS TO EBH-1	SHEARED WARHEADS TO EBH-1	GB BURSTERED ROCKETS	DEMIN WATER FOR FORE PUNCH/ FLUSHING	DEMIN WATER FOR ROCKET CUTTING	TOTAL AGENT WASHOUT TO SPENT DECON HOLDING TANK	TOTAL DRAINED AGENT TO AGENT HOLDING TANK	PACKING MATERIALS TO DSH	AGENT WASHOUT TO SPENT DECON HOLDING TANK	DRAINED AGENT TO AGENT HOLDING TANK	DEMIN WATER FOR AFT PUNCH/ FLUSHING	TOTAL DEMIN WATER SUPPLY FOR FLUSHING	TOTAL DEMIN WATER SUPPLY FOR ROCKET CUTTING
TEMPERATURE, F	77	77	77	77	77	77	77	77	77	77	77	77	77
PRESSURE, PSIA				444.23	74.23	21.23	55.23		21.23	55.23	444.23	74.23	74.23
MUNITIONS/ HOUR			40										
INSTANTANEOUS FLOW, GPM				7.00	3.50	10.00	5.00		5.00	2.50	7.00	28.00	7.00
DENSITY, LB/FT3				62.34	62.24	62.53	67.97		62.53	67.97	62.34	62.24	62.24
VISCOSITY, cP				0.89	0.89	0.96	1.50		0.96	1.50	0.89	0.89	0.89
MOLECULAR WEIGHT	-	-	-	-	-	-	-	-	-	-	-	-	-
ENTHALPY, MMBTU/HR	-	-	-	-	-	-	-	-	-	-	-	-	-
COMPONENT FLOWS, LB/HR													
GB			430.00			86.00	344.00		43.00	172.00			
VX													
ENERGETIC		62.80	125.60										
PROPELLANT	386.00		772.00										
CELLULOSE ACETATE	18.46		36.92										
WATER	166.41	166.41	100.80	274.58	332.81	1500.1		100.80	750.03		475.45	1500.1	665.62
STEEL	251.74	68.00	639.48										
ALUMINUM		213.00	426.00										
FIBERGLASS	105.87	167.79	547.32										
PCB	0.13	0.21	0.68										
WOOD			403.20					403.20					
NAILS			2.67					2.67					
TOTAL PEAK, LB/HR	928.61	678.21	3484.7	274.58	332.81	1586.1	344.00	506.67	793.03	172.00	475.45	1500.1	665.62
AVG THROUGHPUT, LB/HR	575.74	420.49	2160.5	170.24	206.34	983.35	213.28	314.14	491.68	106.64	294.78	930.03	412.68
NOTES			2		5			1, 2				3	

MATERIAL BALANCE TABLE FOR PFD: 24915-07-M5-RHS-00001
ROCKET SHEAR MACHINE : CASE AGENT VX CO-PROCESSING (0 WT% AGENT HEEL TO EBH)

PEAK CASE

STREAM NUMBER	1	11	100	101	102	105	106	107	108	109	110	206	207
DESCRIPTION	SHEARED ROCKET MOTORS TO EBH-1	SHEARED WARHEADS TO EBH-1	VX BURSTERED ROCKETS	DEMIN WATER FOR FORE PUNCH/ FLUSHING	DEMIN WATER FOR ROCKET CUTTING	TOTAL AGENT WASHOUT TO SPENT DECON HOLDING TANK	TOTAL DRAINED AGENT TO AGENT HOLDING TANK	PACKING MATERIALS TO DSH	AGENT WASHOUT TO SPENT DECON HOLDING TANK	DRAINED AGENT TO AGENT HOLDING TANK	DEMIN WATER FOR AFT PUNCH/ FLUSHING	TOTAL DEMIN WATER SUPPLY FOR FLUSHING	TOTAL DEMIN WATER SUPPLY FOR ROCKET CUTTING
TEMPERATURE, F	77	77	77	77	77	77	77	77	77	77	77	77	77
PRESSURE, PSIA				444.23	74.23	21.23	55.23		21.23	55.23	444.23	74.23	74.23
MUNITIONS/ HOUR			48										
INSTANTANEOUS FLOW, GPM				7.00	3.50	10.00	5.00		5.00	2.50	7.00	28.00	7.00
DENSITY, LB/FT3				62.34	62.24	62.29	64.69		62.29	64.69	62.34	62.24	62.24
VISCOSITY, cP				0.89	0.89	0.96	10.00		0.96	10.00	0.89	0.89	0.89
MOLECULAR WEIGHT	-	-	-	-	-	-	-	-	-	-	-	-	-
ENTHALPY, MMBTU/HR	-	-	-	-	-	-	-	-	-	-	-	-	-
COMPONENT FLOWS, LB/HR													
GB													
VX			484.80			19.39	465.41		9.70	232.70			
ENERGETIC		75.36	150.72										
PROPELLANT	463.20		926.40										
CELLULOSE ACETATE	22.15		44.30										
WATER	199.69	199.69	120.96	189.48	399.37	900.03		120.96	450.02		260.54	900.03	798.74
STEEL	302.09	81.60	767.38										
ALUMINUM		255.60	511.20										
FIBERGLASS	127.04	201.35	656.78										
PCB	0.16	0.25	0.82										
WOOD			483.84					483.84					
NAILS			3.20					3.20					
TOTAL PEAK, LB/HR	1114.3	813.84	4150.4	189.48	399.37	919.43	465.41	608.00	459.71	232.70	260.54	900.03	798.74
AVG THROUGHPUT, LB/HR	691.81	505.26	2576.7	117.64	247.94	570.81	288.94	377.47	285.41	144.47	161.75	558.77	495.88
NOTES			2		5			1, 2				4	

MATERIAL BALANCE TABLE FOR PFD: 24915-07-M5-RHS-00001
ROCKET SHEAR MACHINE : CASE AGENT GB CO-PROCESSING (2 WT% AGENT HEEL TO EBH)

PEAK CASE

STREAM NUMBER	1	11	100	101	102	105	106	107	108	109	110	206	207
DESCRIPTION	SHEARED ROCKET MOTORS TO EBH-1	SHEARED WARHEADS TO EBH-1	GB BURSTERED ROCKETS	DEMIN WATER FOR FORE PUNCH/ FLUSHING	DEMIN WATER FOR ROCKET CUTTING	TOTAL AGENT WASHOUT TO SPENT DECON HOLDING TANK	TOTAL DRAINED AGENT TO AGENT HOLDING TANK	PACKING MATERIALS TO DSH	AGENT WASHOUT TO SPENT DECON HOLDING TANK	DRAINED AGENT TO AGENT HOLDING TANK	DEMIN WATER FOR AFT PUNCH/ FLUSHING	TOTAL DEMIN WATER SUPPLY FOR FLUSHING	TOTAL DEMIN WATER SUPPLY FOR ROCKET CUTTING
TEMPERATURE, F	77	77	77	77	77	77	77	77	77	77	77	77	77
PRESSURE, PSIA				444.23	74.23	21.23	55.23		21.23	55.23	444.23	74.23	74.23
MUNITIONS/ HOUR			40										
INSTANTANEOUS FLOW, GPM				7.00	3.50	10.00	5.00		5.00	2.50	7.00	28.00	7.00
DENSITY, LB/FT3				62.34	62.24	62.50	67.97		62.50	67.97	62.34	62.24	62.24
VISCOSITY, cP				0.89	0.89	0.96	1.50		0.96	1.50	0.89	0.89	0.89
MOLECULAR WEIGHT	-	-	-	-	-	-	-	-	-	-	-	-	-
ENTHALPY, MMBTU/HR	-	-	-	-	-	-	-	-	-	-	-	-	-
COMPONENT FLOWS, LB/HR													
GB		4.30	430.00			77.40	344.00		38.70	172.00			
VX													
ENERGETIC		62.80	125.60										
PROPELLANT	386.00		772.00										
CELLULOSE ACETATE	18.46		36.92										
WATER	166.41	166.41	100.80	274.58	332.81	1500.1		100.80	750.03		475.45	1500.1	665.62
STEEL	251.74	68.00	639.48										
ALUMINUM		213.00	426.00										
FIBERGLASS	105.87	167.79	547.32										
PCB	0.13	0.21	0.68										
WOOD			403.20					403.20					
NAILS			2.67					2.67					
TOTAL PEAK, LB/HR	928.61	682.51	3484.7	274.58	332.81	1577.5	344.00	506.67	788.73	172.00	475.45	1500.1	665.62
AVG THROUGHPUT, LB/HR	575.74	423.15	2160.5	170.24	206.34	978.02	213.28	314.14	489.01	106.64	294.78	930.03	412.68
NOTES			2		5			1, 2				3	

MATERIAL BALANCE TABLE FOR PFD: 24915-07-M5-RHS-00001
ROCKET SHEAR MACHINE : CASE AGENT VX CO-PROCESSING (2 WT% AGENT HEEL TO EBH)

PEAK CASE

STREAM NUMBER	1	11	100	101	102	105	106	107	108	109	110	206	207
DESCRIPTION	SHEARED ROCKET MOTORS TO EBH-1	SHEARED WARHEADS TO EBH-1	VX BURSTERED ROCKETS	DEMIN WATER FOR FORE PUNCH/ FLUSHING	DEMIN WATER FOR ROCKET CUTTING	TOTAL AGENT WASHOUT TO SPENT DECON HOLDING TANK	TOTAL DRAINED AGENT TO AGENT HOLDING TANK	PACKING MATERIALS TO DSH	AGENT WASHOUT TO SPENT DECON HOLDING TANK	DRAINED AGENT TO AGENT HOLDING TANK	DEMIN WATER FOR AFT PUNCH/ FLUSHING	TOTAL DEMIN WATER SUPPLY FOR FLUSHING	TOTAL DEMIN WATER SUPPLY FOR ROCKET CUTTING
TEMPERATURE, F	77	77	77	77	77	77	77	77	77	77	77	77	77
PRESSURE, PSIA				444.23	74.23	21.23	55.23		21.23	55.23	444.23	74.23	74.23
MUNITIONS/ HOUR			48										
INSTANTANEOUS FLOW, GPM				7.00	3.50	10.00	5.00		5.00	2.50	7.00	28.00	7.00
DENSITY, LB/FT3				62.34	62.24	62.27	64.69		62.27	64.69	62.34	62.24	62.24
VISCOSITY, cP				0.89	0.89	0.96	10.00		0.96	10.00	0.89	0.89	0.89
MOLECULAR WEIGHT	-	-	-	-	-	-	-	-	-	-	-	-	-
ENTHALPY, MMBTU/HR	-	-	-	-	-	-	-	-	-	-	-	-	-
COMPONENT FLOWS, LB/HR													
GB													
VX		4.85	484.80			9.70	465.41		4.85	232.70			
ENERGETIC		75.36	150.72										
PROPELLANT	463.20		926.40										
CELLULOSE ACETATE	22.15		44.30										
WATER	199.69	199.69	120.96	189.48	399.37	900.03		120.96	450.02		260.54	900.03	798.74
STEEL	302.09	81.60	767.38										
ALUMINUM		255.60	511.20										
FIBERGLASS	127.04	201.35	656.78										
PCB	0.16	0.25	0.82										
WOOD			483.84					483.84					
NAILS			3.20					3.20					
TOTAL PEAK, LB/HR	1114.3	818.69	4150.4	189.48	399.37	909.73	465.41	608.00	454.86	232.70	260.54	900.03	798.74
AVG THROUGHPUT, LB/HR	691.81	508.27	2576.7	117.64	247.94	564.79	288.94	377.47	282.40	144.47	161.75	558.77	495.88
NOTES			2		5			1, 2				4	

NOTES:

1. ONLY POTENTIALLY CONTAMINATED WOOD WILL BE PROCESSED IN DSH.
2. PALLET AVERAGE WOOD MOISTURE CONTENT SHOULD BE ASSUMED TO BE 20 WEIGHT PERCENT ON A WET BASIS.
3. WASH WATER VOLUME FOR GB ROCKET IS 4.5 GALLONS PER ROCKET MAXIMUM.
4. WASH WATER VOLUME FOR VX ROCKET IS 2.25 GALLONS PER ROCKET MAXIMUM.
5. WATER SPRAY WILL BE ON DURING ROCKER MOTOR CUTTING. IT IS ABOUT 0.25 GALLONS PER CUT AND THERE ARE A TOTAL OF 8 CUTS. WATER SPRAY IS OPERATING AS NEEDED BASIS.

THIS DRAWING SUPERSEDES DRAWING 24915-07-M5-HHR-00001

NO.	DATE	DESCRIPTION	DR	CK	DL	PE	APPD
1	10-5-04	ISSUED FOR DESIGN (IFD)	PC	NI	SH	JB	JU
0	6-11-04	ISSUED FOR DESIGN (IFD)	PC	NI	SH	JB	JU

QUALITY ☒ LEVEL 1 ☐ LEVEL 2 ☐ LEVEL 3 ☐ ALL

BECHTEL PARSONS BLUE GRASS
A Joint Venture of Bechtel National, INC. and Parsons Infrastructure & Technology Group Inc.

DOD PROGRAM MANAGER FOR ASSEMBLED CHEMICAL WEAPONS ASSESSMENT EDGEWOOD, MARYLAND

US ARMY ENGINEERING AND SUPPORT CENTER, HUNTSVILLE HUNTSVILLE, ALABAMA

BLUE GRASS CHEMICAL AGENT DESTRUCTION PILOT PLANT PROJECT (BGCAPP)
RICHMOND, KENTUCKY

CONTRACT NO. DAAA09-03-D-0023

MUNITIONS DEMILITARIZATION BUILDING ROCKET SHEAR MACHINE PROCESS FLOW DIAGRAM

PROFESSIONAL STAMP

DRAWING NUMBER 24915-07-M5-RHS-00001 SHEET 2 OF 2 REV 1

07-M5-RHS-1-2.PFZ BGCAPP_E2.BDR

DESIGN FILE: DGNSPEC$$
PLOTTED BY: USERS ON DATE$$$$$$ AT SYTIME USING COLOR$$$$$$$$$$$$$$$$$$$$$$$$

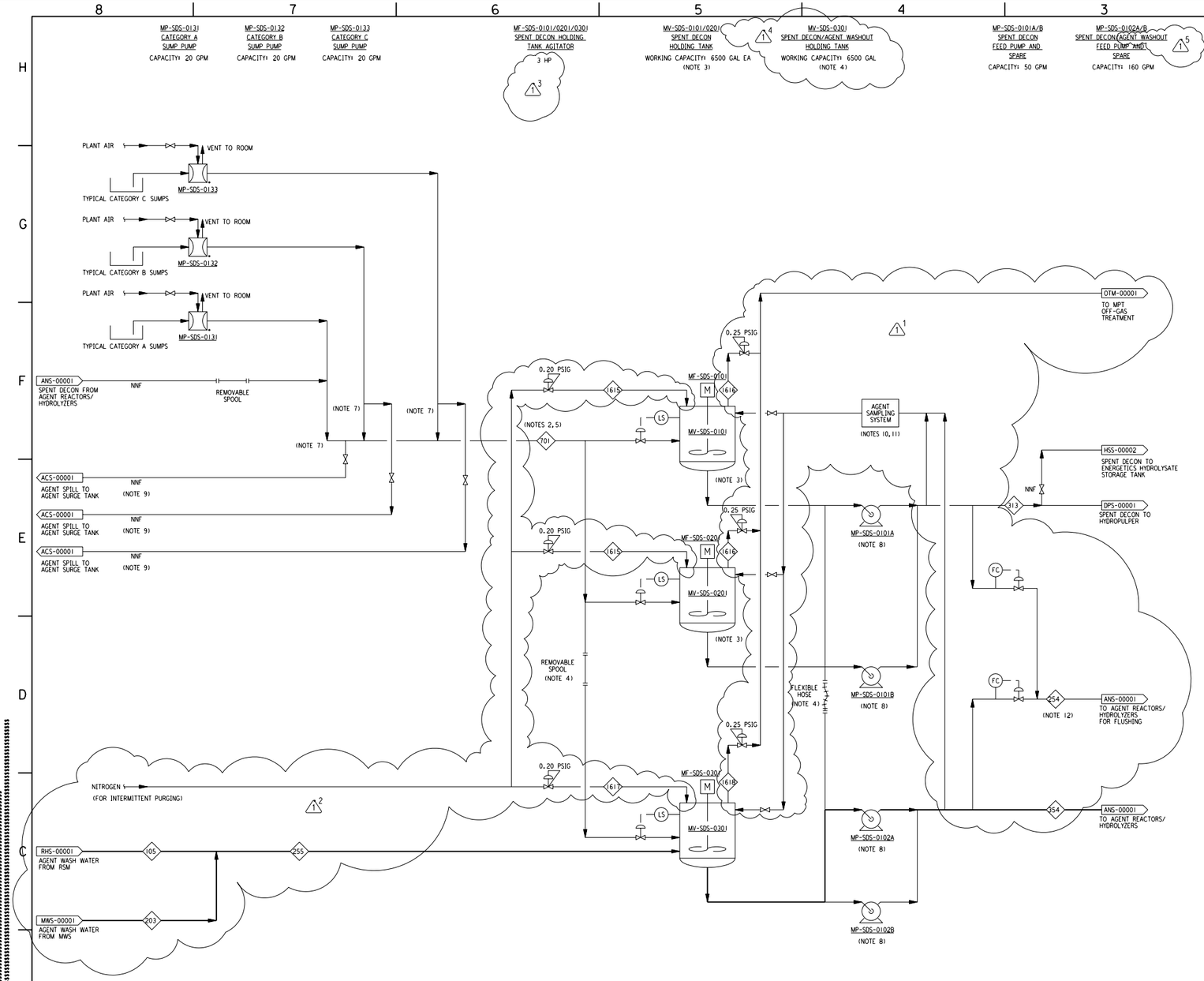

NOTES:

1. ALL STORAGE TANK COMPONENTS ARE LOCATED INSIDE AGENT NEUTRALIZATION ROOM.
2. DELETED
3. SPENT DECON WILL BE COLLECTED IN THE SPENT DECON HOLDING TANKS AND TESTED FOR THE PRESENCE OF AGENT. NORMALLY, AGENT IS NOT EXPECTED TO BE PRESENT AND SPENT DECON WILL BE SENT TO THE HYDROPULPER. IF AGENT IS DETECTED, SPENT DECON WILL BE SENT TO THE AGENT HYDROLYZERS. DURING AGENT CAMPAIGN CHANGEOVER, IF NO AGENT IS DETECTED, THE SPENT DECON SOLUTION IS THEN TRANSFERRED TO THE ENERGETICS HYDROLYSATE STORAGE TANKS.
4. DURING OPERATION, TANK MV-SDS-0301 IS ISOLATED FROM TANKS MV-SDS-0101 AND MV-SDS-0201. MV-SDS-0301 WILL SERVE AS AN AGENT WASH WATER BUFFER TANK BEFORE SENDING TO AGENT REACTORS/HYDROLYZERS.
5. TANKS SHOULD BE FILLED ONE AT A TIME.
6. FOR SYMBOL DEFINITION SEE DRAWING 24915-00-M5-00-00002.
7. CATEGORY "A", "B", AND "C" LINES MUST ENTER EACH SPENT DECON HOLDING TANK FROM THEIR OWN PIPING TO AVOID CROSS CONTAMINATION.
8. MP-SDS-0101A/B TAKE SUCTION FROM ONLY TWO TANKS MV-SDS-0101 AND 0201. MP-SDS-0102A/B TAKE SUCTION FROM ANY OF THE THREE TANKS MV-SDS-0101/0201/0301. THESE FOUR PUMPS WILL NOT TAKE SUCTION FROM THE SAME TANK CONCURRENTLY.
9. IN CASE OF AGENT SPILL IN CATEGORY "A", "B", AND "C", SUMP PUMPS CAN PUMP SPILLED AGENT DIRECTLY TO THE AGENT SURGE TANK.
10. SAMPLING SYSTEM IS LOCATED IN THE GLOVE BOX. LOCAL SAMPLE CONNECTION IS ALSO PROVIDED TO BE USED AS AND IF REQUIRED.
11. SAMPLE STREAMS WILL RETURN TO THE SAME TANK. SEE DRAWING ANS-00002.
12. AGENT WASH WATER WILL BE USED TO FLUSH AGENT LINES AFTER AGENT INJECTION FOR VX CAMPAIGN. FOR GB AND H CAMPAIGNS, SPENT DECON WILL BE USED. SERVICE IS INTERMITTENT.

NO.	DATE	DESCRIPTION	DR	CK	DL	PE	APPD
3							
2							
1							
3	10-13-04	ISSUED FOR DESIGN (IFD)	PC	EV	SH	JB	JU
2	6-11-04	ISSUED FOR DESIGN (IFD)	PC	EV	SH	JB	JU

QUALITY ☒ LEVEL 1 ☐ LEVEL 2 ☐ LEVEL 3 ☐ ALL

BECHTEL PARSONS BLUE GRASS
A JOINT VENTURE OF BECHTEL NATIONAL, INC. AND PARSONS INFRASTRUCTURE & TECHNOLOGY GROUP INC.

DOD PROGRAM MANAGER FOR ASSEMBLED CHEMICAL WEAPONS ASSESSMENT EDGEWOOD, MARYLAND

US ARMY ENGINEERING AND SUPPORT CENTER, HUNTSVILLE HUNTSVILLE, ALABAMA

BLUE GRASS CHEMICAL AGENT DESTRUCTION PILOT PLANT PROJECT (BGCAPP)
RICHMOND, KENTUCKY

CONTRACT NO. DAAA09-03-D-0023

MUNITIONS DEMILITARIZATION BUILDING SPENT DECONTAMINATION SYSTEM PROCESS FLOW DIAGRAM

DRAWING NUMBER 24915-07-M5-SDS-00001 | SHEET 1 OF 2 | REV 1

PROFESSIONAL STAMP

DESIGN FILE: DGNSEC01
PLOTTED BY: USERN ON DATE
AT SYTMC USING COLOR

07-M5-SDS-1-1.PFZ BGCAPP_E2.BDR

MATERIAL BALANCE TABLE FOR PFD: 24915-07-M5-SDS-00001
SPENT DECON SYSTEM — PEAK CASE DURING AGENT CHANGEOVER PERIOD

STREAM NUMBER	313A	313B	701A	701B	1615	1616
DESCRIPTION	GB & H SD TO HYDROPULPER/ HYDROLYZERS	VX SPENT DECON TO HYDROPULPER	GB & H SD TO SPENT DECON HOLDING TANKS	VX SD TO SPENT DECON HOLDING TANKS	NITROGEN TO SPENT DECON TANK	NITROGEN TO OFFGAS TREATMENT
TEMPERATURE, F	77	77	77	77	77	77
PRESSURE, PSIA	20.25	20.25	24.25	24.25	14.43	14.48
INSTANTANEOUS FLOW, GPM (ACFM)	50.00	50.00	20.00	20.00	(21.4)	(2.7)
DENSITY, LB/FT3	65.20	65.04	65.20	65.04	0.070	0.070
VISCOSITY, cP	1.70	0.89	1.70	0.89	0.018	0.018
MOLECULAR WEIGHT	-	-	-	-	28.02	28.02
ENTHALPY, MMBTU/HR	-	-		-	-	-
COMPONENT FLOWS, LB/HR						
GB	-	-	-	-		
VX	-	-	-	-		
H	-	-	-	-		
WATER	470.13	477.78	470.13	477.78		
SODIUM HYDROXIDE	23.98		23.98			
SODIUM HYPOCHLORITE		15.28		15.28		
NITROGEN					0.53	0.53
VOCs (VAPOR)						TRACE
TOTAL PEAK, LB/HR	494.11	493.06	494.11	493.06	0.53	0.53
AVG THROUGHPUT, LB/HR	149.36	155.49	149.36	155.49	0.17	0.17
NOTES	1, 2	1, 3	1, 2	1, 3		

MATERIAL BALANCE TABLE FOR PFD: 24915-07-M5-SDS-00001
SPENT DECON SYSTEM — DURING AGENT GB CO-PROCESSING PERIOD

STREAM NUMBER	105	203	254	255	354	1617	1618
DESCRIPTION	TOTAL AGENT WASHOUT TO SD/ WASHOUT HOLDING TANK	AGENT WASHOUT TO SD/ WASHOUT HOLDING TANK	SD FOR FLUSHING AGENT LINES	AGENT WASHOUT TO SD/ WASHOUT HOLDING TANK	AGENT WASHOUT TO AGENT HYDROLYZERS	NITROGEN TO SPENT DECON TANK	NITROGEN TO OFFGAS TREATMENT
TEMPERATURE, F	77	108	77	90	90	77	90
PRESSURE, PSIA	21.23	27.23	34.23	14.48	34.23	14.43	14.48
INSTANTANEOUS FLOW, GPM	10.00	10.00	20.00	20.00	130.70	(21.4)	(2.7)
DENSITY, LB/FT3	62.53	62.43	61.99	62.50	62.50	0.070	0.069
VISCOSITY, cP	0.96	0.96	0.89	0.96	0.96	0.018	0.018
MOLECULAR WEIGHT	-	-	-	-	-	28.02	28.02
INSTANTANEOUS FLOW, GPM (ACFM)	-	-	-	-	-	-	-
COMPONENT FLOWS, LB/HR							
GB	86.00	43.50		129.50	129.50		
VX							
H							
CELLULOSE ACETATE							
WATER	1500.1	1148.0	126.50	2648.0	2648.0		
NITROGEN						3.11	3.11
VOCs (VAPOR)							TRACE
TOTAL PEAK, LB/HR	1586.1	1191.5	126.50	2777.5	2777.5	3.11	3.11
AVG THROUGHPUT, LB/HR	983.35	865.79	82.96	1849.1	1849.1	2.07	2.07
NOTES			7, 8				

MATERIAL BALANCE TABLE FOR PFD: 24915-07-M5-SDS-00001
SPENT DECON SYSTEM — DURING AGENT VX CO-PROCESSING PERIOD

STREAM NUMBER	105	203	254	255	354	1617	1618
DESCRIPTION	TOTAL AGENT WASHOUT TO SD/ WASHOUT HOLDING TANK	AGENT WASHOUT TO SD/ WASHOUT HOLDING TANK	SD FOR FLUSHING AGENT LINES	AGENT WASHOUT TO SD/ WASHOUT HOLDING TANK	AGENT WASHOUT TO AGENT HYDROLYZERS	NITROGEN TO SPENT DECON TANK	NITROGEN TO OFFGAS TREATMENT
TEMPERATURE, F	77	108	96	96	96	77	96
PRESSURE, PSIA	21.23	27.23	34.23	14.48	34.23	14.43	14.48
INSTANTANEOUS FLOW, GPM	10.00	9.00	20.00	19.00	159.00	(21.4)	(2.5)
DENSITY, LB/FT3	62.29	62.25	62.25	62.25	62.25	0.070	0.068
VISCOSITY, cP	0.96	0.96	0.96	0.96	0.96	0.018	0.018
MOLECULAR WEIGHT	-	-		-	-	28.02	28.02
INSTANTANEOUS FLOW, GPM (ACFM)	-	-		-	-	-	-
COMPONENT FLOWS, LB/HR							
GB							
VX	19.39	6.24	0.29	25.63	25.34		
H							
CELLULOSE ACETATE							
WATER	900.03	1492.4	26.25	2392.4	2366.1		
NITROGEN						2.72	2.72
VOCs (VAPOR)							TRACE
TOTAL PEAK, LB/HR	919.4	1498.6	26.54	2418.0	2391.5	2.72	2.72
AVG THROUGHPUT, LB/HR	570.81	1095.1	17.18	1665.9	1648.7	1.87	1.87
NOTES			7, 8				

MATERIAL BALANCE TABLE FOR PFD: 24915-07-M5-SDS-00001
SPENT DECON SYSTEM — DURING AGENT H PROCESSING PERIOD

STREAM NUMBER	105	203	254	255	354	1617	1618
DESCRIPTION	TOTAL AGENT WASHOUT TO SD/ WASHOUT HOLDING TANK	AGENT WASHOUT TO SD/ WASHOUT HOLDING TANK	SD FOR FLUSHING AGENT LINES	AGENT WASHOUT TO SD/ WASHOUT HOLDING TANK	AGENT WASHOUT TO AGENT HYDROLYZERS	NITROGEN TO SPENT DECON TANK	NITROGEN TO OFFGAS TREATMENT
TEMPERATURE, F		108	77	108	108	77	108
PRESSURE, PSIA		27.23	34.23	14.48	34.23	14.43	14.48
INSTANTANEOUS FLOW, GPM		16.00	20.00	16.00	126.00	(21.4)	(2.1)
DENSITY, LB/FT3		63.19	61.99	63.19	63.19	0.070	0.067
VISCOSITY, cP		0.91	0.89	0.91	0.91	0.018	0.019
MOLECULAR WEIGHT		-	-	-	-	28.02	28.02
INSTANTANEOUS FLOW, GPM (ACFM)		-	-	-	-	-	-
COMPONENT FLOWS, LB/HR							
GB							
VX							
H		215.98		215.98	215.98		
CELLULOSE ACETATE							
WATER		2984.7	43.90	2984.7	2984.7		
NITROGEN						3.55	3.55
VOCs (VAPOR)							TRACE
TOTAL PEAK, LB/HR	0	3200.7	43.90	3200.7	3200.7	3.55	3.55
AVG THROUGHPUT, LB/HR		2105.1	28.88	2105.1	2105.1	2.33	2.33
NOTES			7, 8				

NOTES:

1. EACH TYPE OF AGENT WILL BE PROCESSED IN A SEPARATE CAMPAIGN. TOTAL PEAK CASE REPRESENTS PEAK SPENT DECON CONSUMPTION DURING AGENT CHANGEOVER PERIOD. AVERAGE THROUGHPUT CASE REPRESENTS NORMAL SPENT DECON CONSUMPTION DURING AGENT PROCESSING OPERATION.
2. STREAM 313A AND 701A ARE DEDICATED FOR AGENT GB AND H.
3. STREAM 313B AND 701B ARE DEDICATED FOR AGENT VX.
4. DELETED
5. DELETED
6. DELETED
7. THE CAUSTIC CONTENT OF THE SPENT DECON HAS NOT BEEN TAKEN INTO ACCOUNT IN THE NEUTRALIZATION RECIPE.
8. AGENT WASH WATER WILL BE USED TO FLUSH AGENT LINES AFTER AGENT INJECTION FOR VX CAMPAIGN. FOR GB AND H CAMPAIGNS, SPENT DECON WILL BE USED.

NO.	DATE	DESCRIPTION	DR	CK	DL	PE	APPD
1	10-28-04	ISSUED FOR DESIGN (IFD)	PC	EV	SH	JB	JU
0	6-11-04	ISSUED FOR DESIGN (IFD)	PC	EV	SH	JB	JU

QUALITY ☒ LEVEL 1 ☐ LEVEL 2 ☐ LEVEL 3 ☐ ALL

BECHTEL PARSONS BLUE GRASS — A Joint Venture of Bechtel National, INC. and Parsons Infrastructure & Technology Group Inc.

DOD PROGRAM MANAGER FOR ASSEMBLED CHEMICAL WEAPONS ASSESSMENT EDGEWOOD, MARYLAND

US ARMY ENGINEERING AND SUPPORT CENTER, HUNTSVILLE HUNTSVILLE, ALABAMA

BLUE GRASS CHEMICAL AGENT DESTRUCTION PILOT PLANT PROJECT (BGCAPP)
RICHMOND, KENTUCKY

CONTRACT NO. DAAA09-03-D-0023

MUNITIONS DEMILITARIZATION BUILDING SPENT DECONTAMINATION SYSTEM PROCESS FLOW DIAGRAM

PROFESSIONAL STAMP

DRAWING NUMBER 24915-07-M5-SDS-00001 | SHEET 2 OF 2 | REV 1

07-M5-SDS-1-2.PFZ   BGCAPP_E2.BDR

DESIGN FILE: DGNSPEC$$
PLOTTED BY: USER$ ON DATE$$$$$$$ AT SYTIME USING COLOR$$$$$$$$$$$$$$$$$$$$$$$$$$$$$$$$

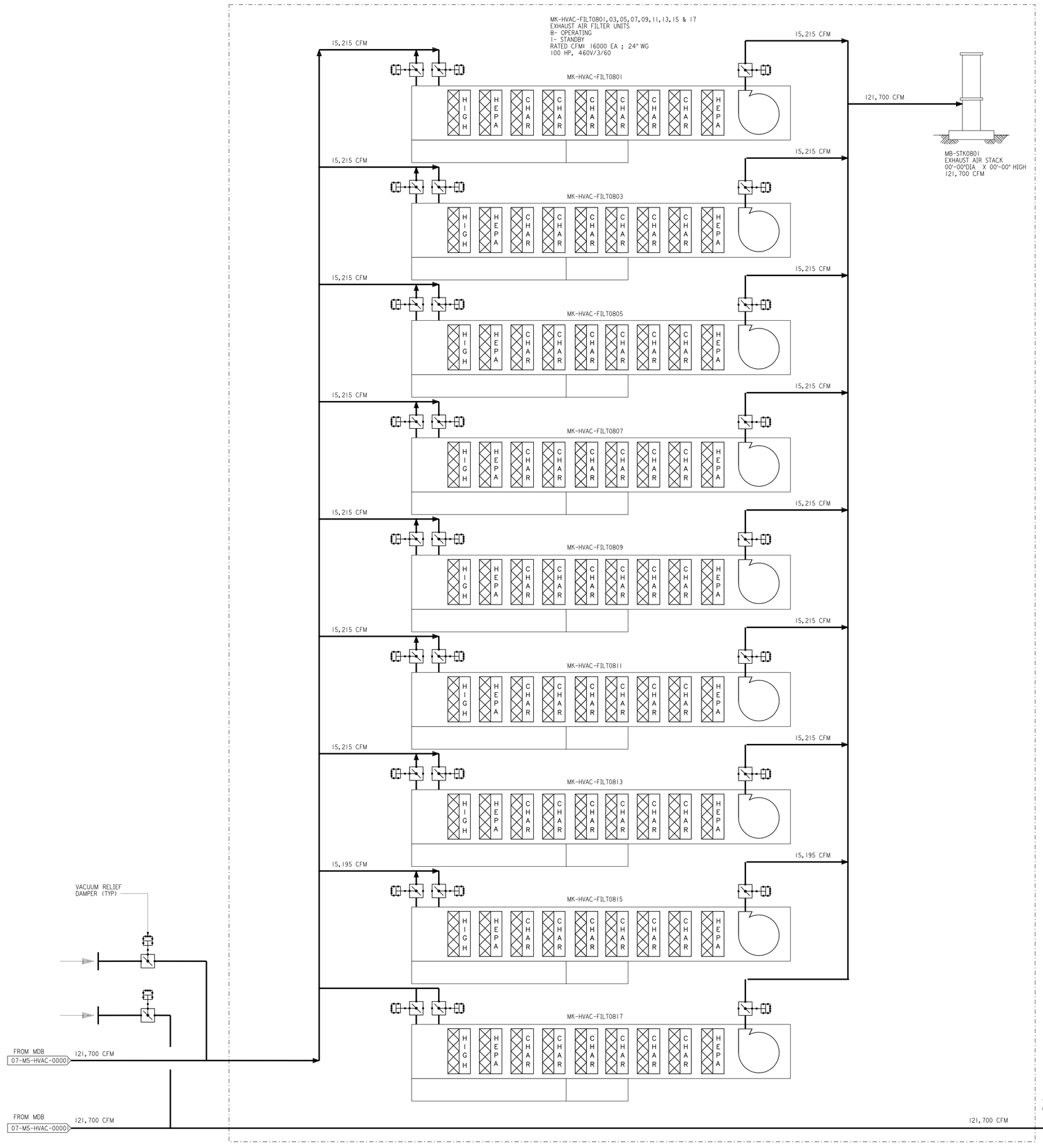

NOTES:

1. FOR SYMBOLS AND LEGEND, SEE DRAWINGS 24915-00-M07-HVAC-00001 AND 00002.
2. DRAWING NUMBERS IN CONTINUATION FLAGS ARE TRUNCATED BY NOT SHOWING PROJECT NUMBER "24915".
3. ALL EQUIPMENT NUMBERS ARE PREFIXED "07" UNLESS OTHERWISE NOTED.
4. FOR CASCADING VENTILATION SYSTEM AIR FLOW DIAGRAMS GENERAL NOTES SEE DRAWING 24915-07-M5-HVAC-00001.

NO.	DATE	DESCRIPTION	DR	CK	DL	PE	APPD
B	7/12/04	IFA. SUPERSEDES SK-MU-0002	DJB	AA	ME	JB	

QUALITY [X] LEVEL 1 [ ] LEVEL 2 [ ] LEVEL 3 [ ] ALL

BECHTEL PARSONS BLUE GRASS
A joint venture of Bechtel National, Inc. and Parsons Infrastructure & Technology Group Inc.

DOD PROGRAM MANAGER FOR ASSEMBLED CHEMICAL WEAPONS ASSESSMENT EDGEWOOD, MARYLAND

US ARMY ENGINEERING AND SUPPORT CENTER, HUNTSVILLE HUNTSVILLE, ALABAMA

BLUE GRASS CHEMICAL AGENT DESTRUCTION PILOT PLANT PROJECT (BGCAPP)
RICHMOND, KENTUCKY

CONTRACT NO. DAAA09-03-D-0023

FILTER AREA CASCADE SYSTEM FILTER UNITS HVAC AIR FLOW DIAGRAM

DRAWING NUMBER 24915-08-M5-HVAC-00001 | SHEET 1 OF 1 | REV B

PROFESSIONAL STAMP

08-m5-hv-01.fdz

BGCAPP_E3.BDR

DESIGN FILE: S:\3D\mu\08-m5-hv-01.fdz
PLOTTED BY: 56315 ON 20-JUL-2004 AT 10:31 USING Color Table= S:\3DStds\ge\edeplot0rg\bw.ctb & Pen Table= S:\3DStds\ge\edeplot0rg\Bluegrass_F.tbl

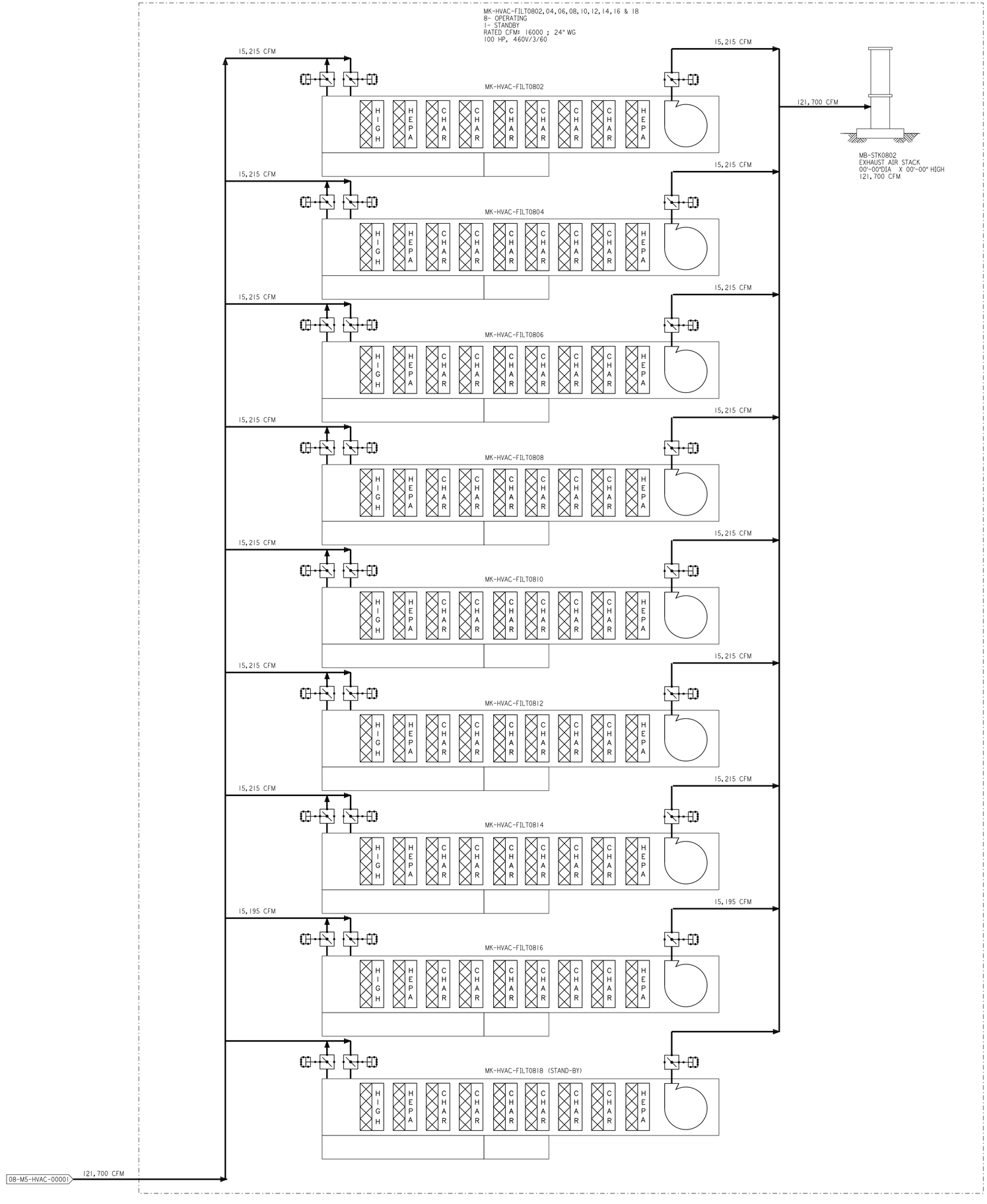

NOTES:

1. FOR SYMBOLS AND LEGEND, SEE DRAWINGS 24915-00-M07-HVAC-00001 AND 00002.
2. DRAWING NUMBERS IN CONTINUATION FLAGS ARE TRUNCATED BY NOT SHOWING PROJECT NUMBER "24915".
3. ALL EQUIPMENT NUMBERS ARE PREFIXED "07" UNLESS OTHERWISE NOTED.
4. FOR CASCADING VENTILATION SYSTEM AIR FLOW DIAGRAMS GENERAL NOTES SEE DRAWING 24915-07-M5-HVAC-00001.

NO.	DATE	DESCRIPTION	DR	CK	DL	PE	APPD
B	7/12/04	IFA. SUPERSEDES SK-MU-0002	DJB	AA	ME	JB	

QUALITY [X] LEVEL 1 [ ] LEVEL 2 [ ] LEVEL 3 [ ] ALL

BECHTEL PARSONS BLUE GRASS
A joint venture of Bechtel National, Inc. and Parsons Infrastructure & Technology Group Inc.

DOD PROGRAM MANAGER FOR ASSEMBLED CHEMICAL WEAPONS ASSESSMENT EDGEWOOD, MARYLAND

US ARMY ENGINEERING AND SUPPORT CENTER, HUNTSVILLE HUNTSVILLE, ALABAMA

BLUE GRASS CHEMICAL AGENT DESTRUCTION PILOT PLANT PROJECT (BGCAPP)
RICHMOND, KENTUCKY

CONTRACT NO. DAAA09-03-D-0023

FILTER AREA CASCADE SYSTEM FILTER UNITS HVAC AIR FLOW DIAGRAM

DRAWING NUMBER 24915-08-M5-HVAC-00002 | SHEET 1 OF 1 | REV B

PROFESSIONAL STAMP

08-m5-hv-02.fdz

BGCAPP_E3.BDR

DESIGN FILE: S:\3D\mu\08-m5-hv-02.fdz
PLOTTED BY: 56315 ON 20-JUL-2004 AT 10:31 USING Color Table- S:\3DStds\ge\edeleplot0rg\bw.ctb & Pen Table- S:\3DStds\ge\edeleplot0rg\Bluegrass_F.tbl

MT-SCWO-0030/0031 HYDROLYSATE BLEND TANK 1/2 2,624 GAL EACH	MP-SCWO-1020 HYDROLYSATE FEED PUMP 1000 LB/HR	MS-SCWO-1020 FLUSH WATER HEATER 0.08 MMBTU/HR	MS-SCWO-1021 FEED WATER PREHEATER 1.37 MMBTU/HR	MX-SCWO-1000 HIGH PRESSURE COMPRESSOR SYSTEM 17,734 LB/HR	MP-SCWO-1023 ACID/BASE DOSING PUMP 19.2 LB/HR	MT-SCWO-1030 SCWO REACTOR 7.5" PROCESS DIAMETER 120" PROCESS LENGTH
MP-SCWO-0030/0031 BLEND PUMP 1/2 20,000 LB/HR EACH	MP-SCWO-1010 HP FUEL PUMP 318 LB/HR	MP-SCWO-1021 FEED WATER PUMP 1000 LB/HR	MX-SCWO-0100 DUNNAGE SLURRY FEED SYSTEM 1000 LB/HR	MS-SCWO-0030/0031 HYDROLYSATE BLEND TANK 1/2 HEATER 0.76 MMBTU/HR EACH	MP-SCWO-1022 QUENCH WATER PUMP 8,157 LB/HR	MX-SCWO-0102 SCWO EFFLUENT COOLING 2.81 MMBTU/HR

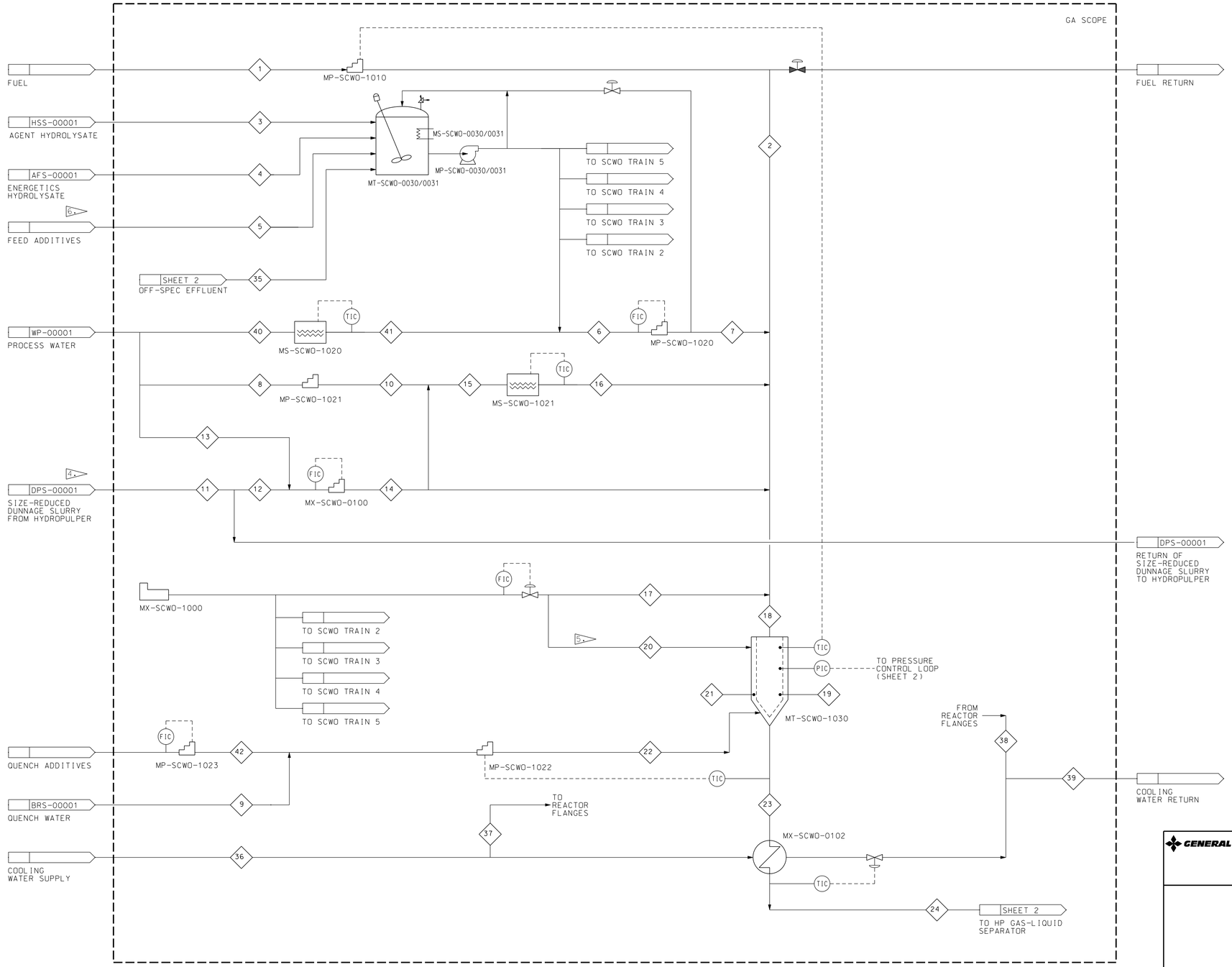

NOTES:

1. DRAWING REPRESENTS A SINGLE SCWO TRAIN. FIVE SCWO TRAINS ARE PROVIDED.
2. XX REPRESENTS M&EB STREAM NUMBERS.
3. ALL COMPONENTS ROUTINELY SUBJECTED TO HIGH TEMPERATURE AND/OR HIGH PRESSURE ARE CONSIDERED QUALITY LEVEL 2. ALL OTHER COMPONENTS ARE CONSIDERED QUALITY LEVEL 3. PLEASE REFERENCE THE SCWO P&ID FOR EQUIPMENT SPECIFIC QUALITY DESIGNATIONS.
4. SIZE-REDUCED DUNNAGE IS PLANNED TO BE PROCESSED SEPARATELY FROM BLENDED AGENT/ENERGETICS HYDROLYSATE (ONE SCWO UNIT IS CURRENTLY ALLOCATED FOR DUNNAGE PROCESSING), ALTHOUGH TESTING MAY BE PERFORMED TO DETERMINE THE EFFICACY OF CO-PROCESSING.
5. AIR SUPPLY FOR REACTOR LINER PURGE.
6. THE FEED ADDITIVES STREAM REPRESENTS MULTIPLE, DEDICATED LINES FOR ALL REQUIRED FEED ADDITIVES.
7. THE FOLLOWING EQUIPMENT ON THIS SHEET SERVES THE SCWO SYSTEM IN IT'S ENTIRETY AND WILL NOT BE PROVIDED ON A PER TRAIN BASIS:

   MT-SCWO-0030/0031
   MP-SCWO-0030/0031
   MS-SCWO-0030/0031
   MX-SCWO-1000
8. EQUIPMENT SPECIFICATIONS ARE BASED ON MAXIMUM INSTANTANEOUS FLOW RATES GIVEN IN THE SCWO M&EB AND INCLUDE NO MARGIN.

Signature Valid
Blayne Monen
cn=Blayne Monen, o=Issued, ou=Configuration Management, c=US
2004.07.12 17:12:20 -07'00'

NO.	DATE	DESCRIPTION	DR	CK	DL	PE	APPD
2	7-12-04	IFD - UPDATED CASE 3	JG	SV	KD	NW	DJ
1	6-30-04	IFD - INCORPORATED COMMENTS, ADDED EQUIP SPECS	JG	SV	KD	NW	DJ
0	5-7-04	IFD - UPDATED W/ CURRENT M&EB DATA	JG	SV	KD	NW	DJ

QUALITY ☐ LEVEL 1 ☒ LEVEL 2 ☒ LEVEL 3 ☐ ALL

BECHTEL PARSONS BLUE GRASS
A Joint Venture of Bechtel National, INC. and Parsons Infrastructure & Technology Group Inc.

DOD PROGRAM MANAGER FOR ASSEMBLED CHEMICAL WEAPONS ASSESSMENT EDGEWOOD, MARYLAND

US ARMY ENGINEERING AND SUPPORT CENTER, HUNTSVILLE HUNTSVILLE, ALABAMA

GENERAL ATOMICS

BLUE GRASS CHEMICAL AGENT DESTRUCTION PILOT PLANT PROJECT (BGCAPP)
RICHMOND, KENTUCKY

CONTRACT NO. DAAA09-03-D-0023

SCWO PROCESS FLOW DIAGRAM

DRAWING NUMBER 24915-10-M5-SCWO-00001 | SHEET 1 OF 8 | REV 2

PROFESSIONAL STAMP

BGCAPP_D3.BDR

...\24915-10-M5-SCWO-00001s01.dgn 07/12/2004 01:02:15 PM

MF-SCWO-1050
HP GAS/LIQUID SEPARATOR
9.9 CU FT

MF-SCWO-1051
HP SOLIDS/LIQUID SEPARATOR
1.9 CU FT

MF-SCWO-1052
LP GAS/LIQUID SEPARATOR
11.0 CU FT

MP-SCWO-1052
LIQUID EFFLUENT PUMP
9,410 LB/HR

MT-SCWO-0041
OFF-SPEC EFFLUENT TANK
5,839 GAL

MP-SCWO-0041
OFF-SPEC EFFLUENT PUMP
21.9 GAL/MIN

MV-SCWO-0040
EMERGENCY RELIEF TANK
9,000 GAL

MP-SCWO-0040
EMERGENCY RELIEF TANK TRANSFER PUMP
25.0 GAL/MIN

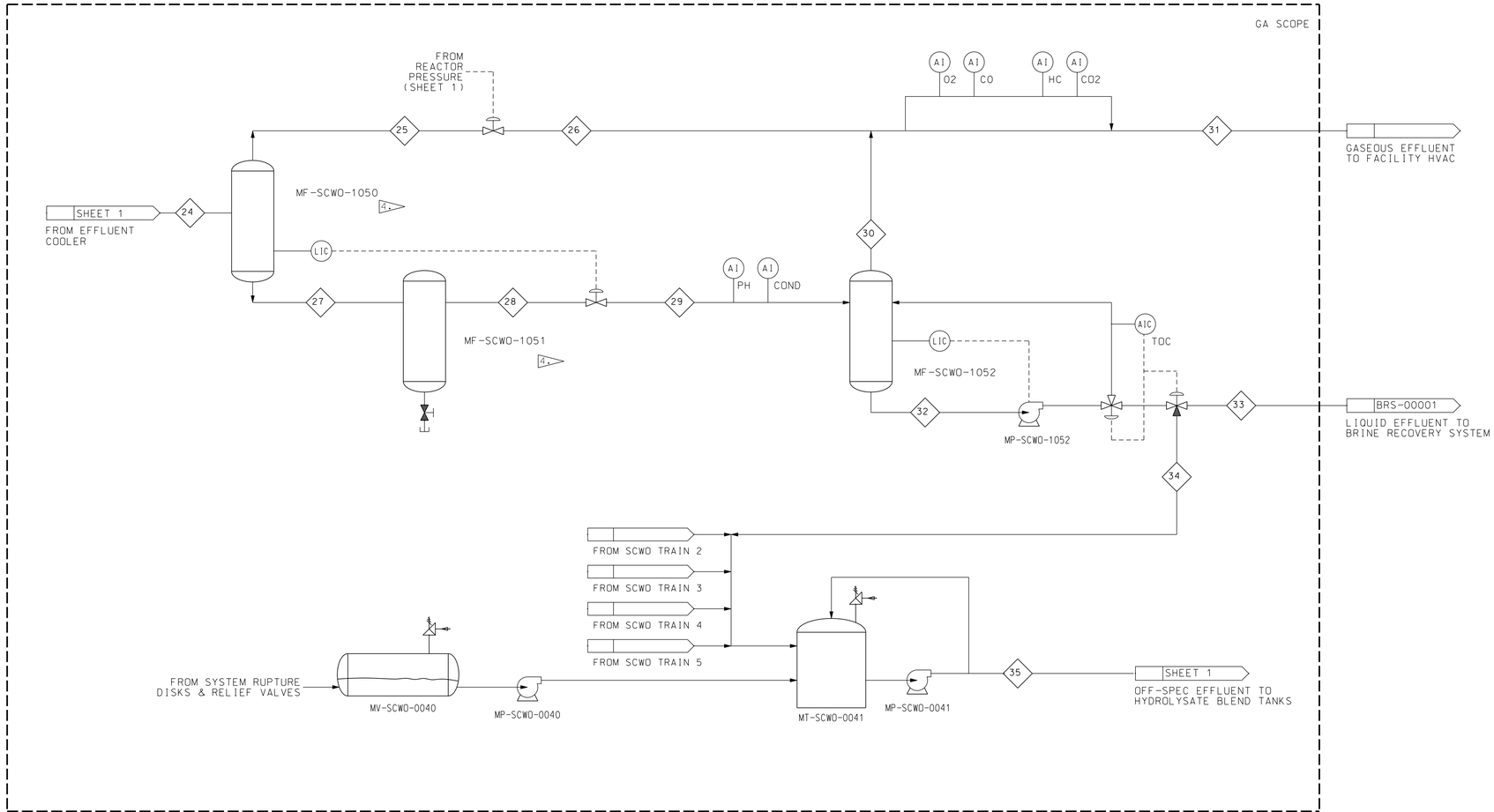

NOTES:

1. DRAWING REPRESENTS A SINGLE SCWO TRAIN. FIVE SCWO TRAINS ARE PROVIDED.
2. XX REPRESENTS M&EB STREAM NUMBERS.
3. ALL COMPONENTS ROUTINELY SUBJECTED TO HIGH TEMPERATURE AND/OR HIGH PRESSURE ARE CONSIDERED QUALITY LEVEL 2. ALL OTHER COMPONENTS ARE CONSIDERED QUALITY LEVEL 3. PLEASE REFERENCE THE SCWO P&ID FOR EQUIPMENT SPECIFIC QUALITY DESIGNATIONS.
4. THE EXPECTED SOLIDS CONCENTRATION IS VERY LOW. SOLIDS WILL BE MANUALLY REMOVED FROM THE COLLECTION VESSEL DURING SCHEDULED MAINTENANCE PERIODS.
5. THE FOLLOWING EQUIPMENT ON THIS SHEET SERVES THE SCWO SYSTEM IN IT'S ENTIRETY AND WILL NOT BE PROVIDED ON A PER TRAIN BASIS:

   MV-SCWO-0040
   MP-SCWO-0040
   MT-SCWO-0041
   MP-SCWO-0041

6. EQUIPMENT SPECIFICATIONS ARE BASED ON MAXIMUM INSTANTANEOUS FLOW RATES GIVEN IN THE SCWO M&EB AND INCLUDE NO MARGIN.

Signature Valid
Blayne Monen
cn=Blayne Monen, o=Issued, ou=Configuration Management, c=US
2004.07.12 17:10:27 -07'00'

NO.	DATE	DESCRIPTION	DR	CK	DL	PE	APPD
2	7-12-04	IFD - UPDATED CASE 3	JG	SV	KD	NW	DJ
1	6-30-04	IFD - INCORPORATED COMMENTS, ADDED EQUIP SPECS	JG	SV	KD	NW	DJ
0	5-7-04	IFD - UPDATED W/CURRENT M&EB DATA	JG	SV	KD	NW	DJ

QUALITY ☐ LEVEL 1 ☒ LEVEL 2 ☒ LEVEL 3 ☐ ALL

BECHTEL PARSONS BLUE GRASS
A Joint Venture of Bechtel National, INC. and Parsons Infrastructure & Technology Group Inc.

DOD PROGRAM MANAGER FOR ASSEMBLED CHEMICAL WEAPONS ASSESSMENT EDGEWOOD, MARYLAND

US ARMY ENGINEERING AND SUPPORT CENTER, HUNTSVILLE HUNTSVILLE, ALABAMA

GENERAL ATOMICS

BLUE GRASS CHEMICAL AGENT DESTRUCTION PILOT PLANT PROJECT (BGCAPP)
RICHMOND, KENTUCKY

CONTRACT NO. DAAA09-03-D-0023

SCWO PROCESS FLOW DIAGRAM

DRAWING NUMBER 24915-10-M5-SCWO-00001
SHEET 2 OF 8
REV 2

PROFESSIONAL STAMP

BGCAPP_D3.BDR

...\24915-10-M5-SCWO-00001s02.dgn 07/12/2004 01:03:07 PM

CASE 1: GB BLENDED HYDROLYSATE FEED BASE CASE

Stream Number:	1	2	3	4	5	6	7	8	9	10	11	12	13	14	15	16	17	18	19	20	21	22	23	24	25	26	27	28	29	30	31	32	33	34	35	36	37	38	39	40	41	42
Stream Description:	LP Fuel	HP Fuel	LP Agent Hydrolysate	LP Energetics Hydrolysate	LP Feed Additives	LP Blended Hydrolysate	HP Blended Hydrolysate	LP Feed Water	LP Quench Water	HP Feed Water	LP Dunnage from DSH	LP Dunnage to HP Slurry Pump	Process Water to HP Slurry Pump	HP Dunnage/ Water	HP Dunnage/ Water to Preheater	HP Dunnage/ Water After Preheater	Air	Combined Nozzle Feed	Pre-Quench Reaction Products	Liner Purge Gas	Liner Purge Gas After Heating	HP Quench Water	Quenched Effluent	Cooled Effluent	Gas Effluent from HP GLS	LP Gas Effluent	Liquid Effluent from HP GLS	Liquid Effluent from SLS	LP Liquid Effluent	Gas Effluent from LP GLS	Recomb. Gas Effluent	Liquid Effluent from LP GLS	Liquid Effluent to BRS	Liquid Effluent to Off-Spec Tank	Off-Spec Effluent to Blend Tanks	Cooling Water Supply	Cooling Water to Reactor Flanges	Cooling Water From Reactor Flanges	Cooling Water Return	Flush Water Supply	Flush Water After Flush Heater	LP Quench Additives
Temperature F	70.0	96.7	80.0	80.0	80.0	80.0	146.8		70.0									70.0	111.1	1200.0	70.0	600.0	81.0	340.0	140.0	140.0	45.0	140.0	140.0	146.8	146.8	49.8	146.8	146.8			90.0	90.0	106.0	120.0			
Pressure psi	14.3	3415.0	14.3	14.3	14.3	14.3	3415.0		14.3									3415.0	3415.0	3415.0	3415.0	3415.0	3415.0	3415.0	3415.0	3415.0	30.0	3415.0	3415.0	30.0	30.0	30.0	30.0	30.0			45.0	45.0	45.0	45.0			
Volume Flow cuft/hr	4.5	4.6	3.6	57.9	1.2	51.8	52.3		130.9									133.4	207.8	708.8	6.2	12.8	129.8	377.5	301.3	145.1	1515.3	156.2	156.2	679.8	523.5	14078.3	156.1	156.1			1119.1	40.2	40.4	1126.5			
Enthalpy MMBtu/hr	-0.861	-0.855	-1.392	-4.398	-0.075	-5.865	-5.800		-55.688									-0.040	-6.695	-6.750	-0.002	0.013	-55.523	-62.260	-64.341	-1.333	-1.348	-63.008	-63.008	-63.008	-0.270	-1.619	-62.738	-62.738			-473.629	-17.017	-16.977	-471.548			
Average Mass Flow lb/hr	236.1	236.1	218.6	743.3	38.1	1000.0	1000.0	0.0	8157.1	0.0	0.0	0.0	0.0	0.0	0.0	0.0	2242.0	3478.1	3478.1	100.0	100.0	8157.1	11735.3	11735.3	2236.6	2236.6	9498.7	9498.7	9498.7	88.3	2324.9	9410.3	9410.3	0.0	0.0	69525.8	2500.0	2500.0	69525.8	0.0	0.0	0.0
Instantaneous Mass Flow lb/hr	236.1	236.1	2186.0	7433.0	381.0	1000.0	1000.0	0.0	8157.1	0.0	0.0	0.0	0.0	0.0	0.0	0.0	2242.0	3478.1	3478.1	100.0	100.0	8157.1	11735.3	11735.3	2236.6	2236.6	9498.7	9498.7	9498.7	88.3	2324.9	9410.3	9410.3	0.0	0.0	69525.8	2500.0	2500.0	69525.8	0.0	0.0	0.0
Mass Flow VAPOR lb/hr																																										
H2O																	0.0	1.8	1104.3	0.0	0.0		94.9	3.9	3.9	3.9			5.1	5.1	8.4											
ISOPROPANOL																	0.0	1.5	0.0	0.0	0.0		0.0	0.0	0.0	0.0			0.0	0.0	0.0											
CO2																	0.0	0.0	410.7	0.0	0.0		366.8	340.1	340.1	340.1			63.1	63.1	403.2											
HCL																	0.0	2.1	0.0	0.0	0.0		0.0	0.0	0.0	0.0			0.0	0.0	0.0											
H2SO4																	0.0	0.0	0.0	0.0	0.0		0.0	0.0	0.0	0.0			0.0	0.0	0.0											
NAOH																	0.0	0.0	0.0	0.0	0.0		0.0	0.0	0.0	0.0			0.0	0.0	0.0											
GB-PYRO-NA																	0.0	0.0	0.0	0.0	0.0		0.0	0.0	0.0	0.0			0.0	0.0	0.0											
MPA-NA2																	0.0	0.0	0.0	0.0	0.0		0.0	0.0	0.0	0.0			0.0	0.0	0.0											
DISOPROPY LUREA																	0.0	0.0	0.0	0.0	0.0		0.0	0.0	0.0	0.0			0.0	0.0	0.0											
O2																	520.1	518.8	86.7	23.2	23.2		108.5	107.9	107.9	107.9			1.9	1.9	109.8											
N2																	1721.9	1719.3	1725.4	76.8	76.8		1785.7	1783.9	1783.9	1783.9			18.2	18.2	1802.1											
H2																	0.0	0.0	0.0	0.0	0.0		0.0	0.0	0.0	0.0			0.0	0.0	0.0											
N2O																	0.0	0.0	0.8	0.0	0.0		0.8	0.7	0.7	0.7			0.1	0.1	0.8											
NHCL																	0.0	0.0	0.0	0.0	0.0		0.0	0.0	0.0	0.0			0.0	0.0	0.0											
C5CL6																	0.0	0.0	0.0	0.0	0.0		0.0	0.0	0.0	0.0			0.0	0.0	0.0											
DIMETHYLPHTHALATE																	0.0	0.0	0.0	0.0	0.0		0.0	0.0	0.0	0.0			0.0	0.0	0.0											
SODIUM STEARATE																	0.0	0.0	0.0	0.0	0.0		0.0	0.0	0.0	0.0			0.0	0.0	0.0											
C7H6O2																	0.0	0.0	0.0	0.0	0.0		0.0	0.0	0.0	0.0			0.0	0.0	0.0											
TRIBUTYLAMINE																	0.0	0.0	0.0	0.0	0.0		0.0	0.0	0.0	0.0			0.0	0.0	0.0											
CHSF																	0.0	0.0	0.0	0.0	0.0		0.0	0.0	0.0	0.0			0.0	0.0	0.0											
CHGF2																	0.0	0.0	0.0	0.0	0.0		0.0	0.0	0.0	0.0			0.0	0.0	0.0											
NANO2																	0.0	0.0	0.0	0.0	0.0		0.0	0.0	0.0	0.0			0.0	0.0	0.0											
NANO3																	0.0	4.8	0.0	0.0	0.0		0.0	0.0	0.0	0.0			0.0	0.0	0.0											
SODIUM FORMATE																	0.0	0.0	0.0	0.0	0.0		0.0	0.0	0.0	0.0			0.0	0.0	0.0											
SODIUM ACETATE																	0.0	0.0	0.0	0.0	0.0		0.0	0.0	0.0	0.0			0.0	0.0	0.0											
GLYCEROL																	0.0	0.0	0.0	0.0	0.0		0.0	0.0	0.0	0.0			0.0	0.0	0.0											
NACL																	0.0	0.0	40.0	0.0	0.0		0.0	0.0	0.0	0.0			0.0	0.0	0.0											
NAF																	0.0	0.0	1.1	0.0	0.0		0.0	0.0	0.0	0.0			0.0	0.0	0.0											
NAHSO4																	0.0	0.0	0.0	0.0	0.0		0.0	0.0	0.0	0.0			0.0	0.0	0.0											
NA2SO4																	0.0	0.0	94.3	0.0	0.0		0.0	0.0	0.0	0.0			0.0	0.0	0.0											
NAH2PO4																	0.0	0.0	13.1	0.0	0.0		0.0	0.0	0.0	0.0			0.0	0.0	0.0											
HF																	0.0	0.0	1.7	0.0	0.0		0.0	0.0	0.0	0.0			0.0	0.0	0.0											
ALUMINUM																	0.0	0.0	0.0	0.0	0.0		0.0	0.0	0.0	0.0			0.0	0.0	0.0											
H3PO4																	0.0	0.0	0.0	0.0	0.0		0.0	0.0	0.0	0.0			0.0	0.0	0.0											
AL2O3																	0.0	0.0	0.1	0.0	0.0		0.0	0.0	0.0	0.0			0.0	0.0	0.0											
Total VAPOR lb/hr	0.0	0.0	0.0	0.0	0.0	0.0	0.0	0.0	0.0	0.0	0.0	0.0	0.0	0.0	0.0	0.0	2242.0	2248.3	3478.1	100.0	100.0	0.0	2356.7	2236.6	2236.6	2236.6	0.0	0.0	88.3	88.3	2324.3	0.0	0.0	0.0	0.0	0.0	0.0	0.0	0.0	0.0	0.0	0.0
Mass Flow LIQUID lb/hr																																										
H2O	70.8	70.8	191.7	609.8	9.0	810.5	810.5		8157.1									879.5					8157.1	9166.5	9257.5			9257.5	9257.5	9252.4		0.6	9252.4	9252.4			69525.8	2500.0	2500.0	69525.8			
ISOPROPANOL	165.3	165.3	0.2	0.0	0.0	0.2	0.2		0.0									164.0					0.0	0.0	0.0			0.0	0.0	0.0		0.0	0.0	0.0			0.0	0.0	0.0	0.0			
CO2	0.0	0.0	0.0	0.0	0.0	0.0	0.0		0.0									0.0					0.0	44.0	70.6			70.6	70.6	7.6		0.0	7.6	7.6			0.0	0.0	0.0	0.0			
HCL	0.0	0.0	0.0	0.0	5.0	5.0	5.0		0.0									2.9					0.0	0.0	0.0			0.0	0.0	0.0		0.0	0.0	0.0			0.0	0.0	0.0	0.0			
H2SO4	0.0	0.0	0.0	0.0	0.0	0.0	0.0		0.0									0.0					0.0	0.0	0.0			0.0	0.0	0.0		0.0	0.0	0.0			0.0	0.0	0.0	0.0			
NAOH	0.0	0.0	3.5	0.0	24.1	27.6	27.6		0.0									27.6					0.0	0.0	0.0			0.0	0.0	0.0		0.0	0.0	0.0			0.0	0.0	0.0	0.0			
GB-PYRO-NA	0.0	0.0	16.9	0.0	0.0	16.9	16.9		0.0									16.9					0.0	0.0	0.0			0.0	0.0	0.0		0.0	0.0	0.0			0.0	0.0	0.0	0.0			
MPA-NA2	0.0	0.0	0.5	0.0	0.0	0.5	0.5		0.0									0.5					0.0	0.0	0.0			0.0	0.0	0.0		0.0	0.0	0.0			0.0	0.0	0.0	0.0			
DISOPROPY LUREA	0.0	0.0	0.7	0.0	0.0	0.7	0.7		0.0									0.7					0.0	0.0	0.0			0.0	0.0	0.0		0.0	0.0	0.0			0.0	0.0	0.0	0.0			
O2	0.0	0.0	0.0	0.0	0.0	0.0	0.0		0.0									1.4					0.0	1.4	1.9			1.9	1.9	0.0		0.0	0.0	0.0			0.0	0.0	0.0	0.0			
N2	0.0	0.0	0.0	0.0	0.0	0.0	0.0		0.0									2.6					0.0	16.5	18.3			18.3	18.3	0.1		0.0	0.1	0.1			0.0	0.0	0.0	0.0			
H2	0.0	0.0	0.0	0.0	0.0	0.0	0.0		0.0									0.0					0.0	0.0	0.0			0.0	0.0	0.0		0.0	0.0	0.0			0.0	0.0	0.0	0.0			
N2O	0.0	0.0	0.0	0.0	0.0	0.0	0.0		0.0									0.0					0.0	0.0	0.1			0.1	0.1	0.0		0.0	0.0	0.0			0.0	0.0	0.0	0.0			
NHCL	0.0	0.0	0.0	4.4	0.0	4.4	4.4		0.0									4.4					0.0	0.0	0.0			0.0	0.0	0.0		0.0	0.0	0.0			0.0	0.0	0.0	0.0			
C5CL6	0.0	0.0	0.0	0.7	0.0	0.7	0.7		0.0									0.7					0.0	0.0	0.0			0.0	0.0	0.0		0.0	0.0	0.0			0.0	0.0	0.0	0.0			
DIMETHYLPHTHALATE	0.0	0.0	0.0	0.4	0.0	0.4	0.4		0.0									0.4					0.0	0.0	0.0			0.0	0.0	0.0		0.0	0.0	0.0			0.0	0.0	0.0	0.0			
SODIUM STEARATE	0.0	0.0	0.0	0.4	0.0	0.4	0.4		0.0									0.4					0.0	0.0	0.0			0.0	0.0	0.0		0.0	0.0	0.0			0.0	0.0	0.0	0.0			
C7H6O2	0.0	0.0	0.0	0.4	0.0	0.4	0.4		0.0									0.4					0.0	0.0	0.0			0.0	0.0	0.0		0.0	0.0	0.0			0.0	0.0	0.0	0.0			
TRIBUTYLAMINE	0.0	0.0	0.3	0.0	0.0	0.3	0.3		0.0									0.3					0.0	0.0	0.0			0.0	0.0	0.0		0.0	0.0	0.0			0.0	0.0	0.0	0.0			
CHSF	0.0	0.0	0.0	0.0	0.0	0.0	0.0		0.0									0.0					0.0	0.0	0.0			0.0	0.0	0.0		0.0	0.0	0.0			0.0	0.0	0.0	0.0			
CHGF2	0.0	0.0	0.1	0.0	0.0	0.1	0.1		0.0									0.1					0.0	0.0	0.0			0.0	0.0	0.0		0.0	0.0	0.0			0.0	0.0	0.0	0.0			
NANO2	0.0	0.0	0.0	11.1	0.0	11.1	11.1		0.0									11.1					0.0	0.0	0.0			0.0	0.0	0.0		0.0	0.0	0.0			0.0	0.0	0.0	0.0			
NANO3	0.0	0.0	0.0	5.4	0.0	5.4	5.4		0.0									0.6					0.0	0.0	0.0			0.0	0.0	0.0		0.0	0.0	0.0			0.0	0.0	0.0	0.0			
SODIUM FORMATE	0.0	0.0	0.0	11.9	0.0	11.9	11.9		0.0									11.9					0.0	0.0	0.0			0.0	0.0	0.0		0.0	0.0	0.0			0.0	0.0	0.0	0.0			
SODIUM ACETATE	0.0	0.0	0.0	12.3	0.0	12.3	12.3		0.0									12.3					0.0	0.0	0.0			0.0	0.0	0.0		0.0	0.0	0.0			0.0	0.0	0.0	0.0			
GLYCEROL	0.0	0.0	0.0	0.9	0.0	0.9	0.9		0.0									0.9					0.0	0.0	0.0			0.0	0.0	0.0		0.0	0.0	0.0			0.0	0.0	0.0	0.0			
NACL	0.0	0.0	0.0	26.3	0.0	26.3	26.3		0.0									26.3					0.0	40.0	40.0			40.0	40.0	40.0		0.0	40.0	40.0			0.0	0.0	0.0	0.0			
NAF	0.0	0.0	4.6	0.0	0.0	4.6	4.6		0.0									4.6					0.0	1.1	1.1			1.1	1.1	1.1		0.0	1.1	1.1			0.0	0.0	0.0	0.0			
NAHSO4	0.0	0.0	0.0	0.0	0.0	0.0	0.0		0.0									0.0					0.0	0.0	0.0			0.0	0.0	0.0		0.0	0.0	0.0			0.0	0.0	0.0	0.0			
NA2SO4	0.0	0.0	0.0	59.5	0.0	59.5	59.5		0.0									59.5					0.0	94.3	94.3			94.3	94.3	94.3		0.0	94.3	94.3			0.0	0.0	0.0	0.0			
NAH2PO4	0.0	0.0	0.0	0.0	0.0	0.0	0.0		0.0									0.0					0.0	13.1	13.1			13.1	13.1	13.1		0.0	13.1	13.1			0.0	0.0	0.0	0.0			
HF	0.0	0.0	0.0	0.0	0.0	0.0	0.0		0.0									0.0					0.0	1.7	1.7			1.7	1.7	1.7		0.0	1.7	1.7			0.0	0.0	0.0	0.0			
ALUMINUM	0.0	0.0	0.0	0.0	0.0	0.0	0.0		0.0									0.0					0.0	0.0	0.0			0.0	0.0	0.0		0.0	0.0	0.0			0.0	0.0	0.0	0.0			
H3PO4	0.0	0.0	0.0	0.0	0.0	0.0	0.0		0.0									0.0					0.0	0.0	0.0			0.0	0.0	0.0		0.0	0.0	0.0			0.0	0.0	0.0	0.0			
AL2O3	0.0	0.0	0.0	0.0	0.0	0.0	0.0		0.0									0.0					0.0	0.1	0.1			0.1	0.1	0.1		0.0	0.1	0.1			0.0	0.0	0.0	0.0			
Total LIQUID lb/hr	236.1	236.1	218.6	743.3	38.1	1000.0	1000.0	0.0	8157.1	0.0	0.0	0.0	0.0	0.0	0.0	0.0	0.0	1229.8	0.0	0.0	0.0	8157.1	9378.6	9498.7	0.0	0.0	9498.7	9498.7	9410.3	0.0	0.6	9410.3	9410.3	0.0	0.0	69525.8	2500.0	2500.0	69525.8	0.0	0.0	0.0

GENERAL NOTES:

1. DATA ARE GIVEN FOR A SINGLE SCWO TRAIN. FIVE SCWO TRAINS ARE PROVIDED.
2. ALL INFORMATION, CALCULATIONS, AND ASSUMPTIONS USED IN THE DETERMINATION OF STREAM DATA MAY BE FOUND IN THE "MASS AND ENERGY BALANCES FOR THE SCWO SYSTEM," CALC. NO. 24915-10-M4-SCWO-00001, REV. 1, JULY 2004. (1, 2)

Blayne Monen
cn=Blayne Monen, o=Issued, ou=Configuration Management, c=US
Signature Valid 2004.07.12 17:10:41 -07'00'

NO.	DATE	DESCRIPTION	DR	CK	DL	PE	APPD
2	7-12-04	IFD, UPDATED CASE 3	JG	SV	KD	NW	DJ
1	6-30-04	IFD, INCORPORATED COMMENTS, ADDED EQUIP SPECS	JG	SV	KD	NW	DJ
0	5-7-04	IFD, UPDATED W/ CURRENT M&EB DATA	JG	SV	KD	NW	DJ

QUALITY ☐ LEVEL 1 ☒ LEVEL 2 ☒ LEVEL 3 ☐ ALL

BECHTEL PARSONS BLUE GRASS
A Joint Venture of Bechtel National, INC. and Parsons Infrastructure & Technology Group Inc.

DOD PROGRAM MANAGER FOR ASSEMBLED CHEMICAL WEAPONS ASSESSMENT EDGEWOOD, MARYLAND

US ARMY ENGINEERING AND SUPPORT CENTER, HUNTSVILLE HUNTSVILLE, ALABAMA

GENERAL ATOMICS

BLUE GRASS CHEMICAL AGENT DESTRUCTION PILOT PLANT PROJECT (BGCAPP)
RICHMOND, KENTUCKY

CONTRACT NO. DAAA09-03-D-0023

SCWO
PROCESS FLOW DIAGRAM

DRAWING NUMBER 24915-10-M5-SCWO-00001 | SHEET 3 OF 8 | REV 2

PROFESSIONAL STAMP

bgcapp_d3.dwg

GENERAL NOTES:

1. DATA ARE GIVEN FOR A SINGLE SCWO TRAIN. FIVE SCWO TRAINS ARE PROVIDED.
2. ALL INFORMATION, CALCULATIONS, AND ASSUMPTIONS USED IN THE DETERMINATION OF STREAM DATA MAY BE FOUND IN THE "MASS AND ENERGY BALANCES FOR THE SCWO SYSTEM," CALC. NO. 24915-10-M4-SCWO-00001, REV. 1, JULY 2004. (2)

CASE 2A: VX BLENDED HYDROLYSATE FEED BASE CASE (FEED RATIO 2.5:1)

Stream Number:	1	2	3	4	5	6	7	8	9	10	11	12	13	14
Stream Description:	LP Fuel	HP Fuel	LP Agent Hydrolysate	LP Energetics Hydrolysate	LP Feed Additives	LP Blended Hydrolysate	HP Blended Hydrolysate	LP Feed Water	LP Quench Water	HP Feed Water	LP Dunnage from DSH	LP Dunnage to HP Slurry Pump	Process Water to HP Slurry Pump	HP Dunnage/ Water
Temperature F	70.0	96.7	80.0	80.0	80.0	80.0	194.8		70.0					
Pressure psi	14.3	3415.0	14.3	14.3	14.3	14.3	3415.0		14.3					
Volume Flow cuft/hr	3.8	3.9	6.9	15.0	0.6	22.5	20.6		119.8					
Enthalpy MMBtu/hr	-0.726	-0.722	-1.592	-3.934	-0.185	-5.709	-5.683		-50.970					
Average Flow lb/hr	199.3	199.3	273.1	682.7	44.1	999.9	999.9	0.0	7466.0	0.0	0.0	0.0	0.0	0.0
Instantaneous Flow lb/hr	199.3	199.3	2731.0	6827.0	441.0	999.9	999.9	0.0	7466.0	0.0	0.0	0.0	0.0	0.0
Mass Flow VAPOR lb/hr														
H2O														
ISOPROPANOL														
ETHANOL														
CO2														
HCL														
H2SO4														
NAOH														
MPA-NA2														
DIISOPROPYLUREA														
RSSR														
EMPA-NA														
RS-NA														
O2														
N2														
H2														
N2O														
NH4CL														
C5CL6														
DIMETHYLPHTHALATE														
SODIUM STEARATE														
C7H6O2														
NANO2														
NANO3														
SODIUM FORMATE														
SODIUM ACETATE														
GLYCEROL														
NACL														
NAHSO4														
NA2SO4														
NAH2PO4														
HF														
H3PO4														
SULFUR														
IRON														
Total VAPOR lb/hr	0.0	0.0	0.0	0.0	0.0	0.0	0.0	0.0	0.0	0.0	0.0	0.0	0.0	0.0
Mass Flow LIQUID lb/hr														
H2O	59.8	59.8	206.8	550.8	14.1	771.7	771.7		7466.0					
ISOPROPANOL	139.5	139.5	0.0	0.0	0.0	0.0	0.0		0.0					
ETHANOL	0.0	0.0	0.7	0.0	0.0	0.7	0.7		0.0					
CO2	0.0	0.0	0.0	0.0	0.0	0.0	0.0		0.0					
HCL	0.0	0.0	0.0	0.0	8.0	8.0	8.0		0.0					
H2SO4	0.0	0.0	0.0	0.0	22.0	22.0	22.0		0.0					
NAOH	0.0	0.0	10.1	0.0	0.0	10.1	10.1		0.0					
MPA-NA2	0.0	0.0	2.2	0.0	0.0	2.2	2.2		0.0					
DIISOPROPYLUREA	0.0	0.0	1.3	0.0	0.0	1.3	1.3		0.0					
RSSR	0.0	0.0	1.0	0.0	0.0	1.0	1.0		0.0					
EMPA-NA	0.0	0.0	22.4	0.0	0.0	22.4	22.4		0.0					
RS-NA	0.0	0.0	28.3	0.0	0.0	28.3	28.3		0.0					
O2	0.0	0.0	0.0	0.0	0.0	0.0	0.0		0.0					
N2	0.0	0.0	0.0	0.0	0.0	0.0	0.0		0.0					
H2	0.0	0.0	0.0	0.0	0.0	0.0	0.0		0.0					
N2O	0.0	0.0	0.0	0.0	0.0	0.0	0.0		0.0					
NH4CL	0.0	0.0	0.0	4.4	0.0	4.4	4.4		0.0					
C5CL6	0.0	0.0	0.0	0.0	0.0	0.0	0.0		0.0					
DIMETHYLPHTHALATE	0.0	0.0	0.0	0.3	0.0	0.3	0.3		0.0					
SODIUM STEARATE	0.0	0.0	0.0	0.3	0.0	0.3	0.3		0.0					
C7H6O2	0.0	0.0	0.0	0.0	0.0	0.0	0.0		0.0					
NANO2	0.0	0.0	0.0	11.1	0.0	11.1	11.1		0.0					
NANO3	0.0	0.0	0.0	5.4	0.0	5.4	5.4		0.0					
SODIUM FORMATE	0.0	0.0	0.0	11.8	0.0	11.8	11.8		0.0					
SODIUM ACETATE	0.0	0.0	0.0	12.2	0.0	12.2	12.2		0.0					
GLYCEROL	0.0	0.0	0.0	1.0	0.0	1.0	1.0		0.0					
NACL	0.0	0.0	0.0	26.3	0.0	26.3	26.3		0.0					
NAHSO4	0.0	0.0	0.0	0.0	0.0	0.0	0.0		0.0					
NA2SO4	0.0	0.0	0.2	59.1	0.0	59.3	59.3		0.0					
NAH2PO4	0.0	0.0	0.0	0.0	0.0	0.0	0.0		0.0					
HF	0.0	0.0	0.0	0.0	0.0	0.0	0.0		0.0					
H3PO4	0.0	0.0	0.0	0.0	0.0	0.0	0.0		0.0					
SULFUR	0.0	0.0	0.1	0.0	0.0	0.1	0.1		0.0					
IRON	0.0	0.0	0.0	0.0	0.0	0.0	0.0		0.0					
Total LIQUID lb/hr	199.3	199.3	273.1	682.7	44.1	999.9	999.9	0.0	7466.0	0.0	0.0	0.0	0.0	0.0

Stream Number:	15	16	17	18	19	20	21	22	23	24	25	26	27	28
Stream Description:	HP Dunnage/ Water to Preheater	HP Dunnage/ Water After Preheater	Air	Combined Nozzle Feed	Pre-Quench Reaction Products	Liner Purge Gas	Liner Purge Gas After Heating	HP Quench Water	Quenched Effluent	Cooled Effluent	Gas Effluent from HP GLS	LP Gas Effluent	Liquid Effluent from HP GLS	Liquid Effluent from SLS
Temperature F			70.0	132.9	1200.0	70.0	600.0	81.0	355.0	140.0	140.0	45.0	140.0	140.0
Pressure psi			3415.0	3415.0	3415.0	3415.0	3415.0	3415.0	3415.0	3415.0	3415.0	30.0	3415.0	3415.0
Volume Flow cuft/hr			138.0	180.8	708.3	6.2	12.8	118.8	379.5	295.2	150.1	13976.1	145.1	145.1
Enthalpy MMBtu/hr			-0.042	-6.446	-6.501	-0.002	0.013	-50.819	-57.307	-59.403	-1.362	-1.379	-58.041	-58.041
Average Flow lb/hr	0.0	0.0	2320.0	3519.1	3519.1	100.0	100.0	7466.0	11085.2	11085.2	2311.5	2311.5	8773.7	8773.7
Instantaneous Flow lb/hr	0.0	0.0	2320.0	3519.1	3519.1	100.0	100.0	7466.0	11085.2	11085.2	2311.5	2311.5	8773.7	8773.7
Mass Flow VAPOR lb/hr														
H2O			0.0	3.1	1052.4	0.0	0.0		117.8	4.1	4.1	4.1		
ISOPROPANOL			0.0	2.1	0.0	0.0	0.0		0.0	0.0	0.0	0.0		
ETHANOL			0.0	0.0	0.0	0.0	0.0		0.0	0.0	0.0	0.0		
CO2			0.0	0.0	412.1	0.0	0.0		372.5	347.7	347.7	347.7		
HCL			0.0	3.9	0.0	0.0	0.0		0.0	0.0	0.0	0.0		
H2SO4			0.0	0.0	0.0	0.0	0.0		0.0	0.0	0.0	0.0		
NAOH			0.0	0.0	0.0	0.0	0.0		0.0	0.0	0.0	0.0		
MPA-NA2			0.0	0.0	0.0	0.0	0.0		0.0	0.0	0.0	0.0		
DIISOPROPYLUREA			0.0	0.0	0.0	0.0	0.0		0.0	0.0	0.0	0.0		
RSSR			0.0	0.0	0.0	0.0	0.0		0.0	0.0	0.0	0.0		
EMPA-NA			0.0	0.0	0.0	0.0	0.0		0.0	0.0	0.0	0.0		
RS-NA			0.0	0.0	0.0	0.0	0.0		0.0	0.0	0.0	0.0		
O2			538.2	537.1	89.7	23.2	23.2		111.6	111.1	111.1	111.1		
N2			1781.7	1779.5	1787.5	76.8	76.8		1849.5	1847.4	1847.4	1847.4		
H2			0.0	0.0	0.0	0.0	0.0		0.0	0.0	0.0	0.0		
N2O			0.0	0.0	1.3	0.0	0.0		1.3	1.2	1.2	1.2		
NH4CL			0.0	0.0	0.0	0.0	0.0		0.0	0.0	0.0	0.0		
C5CL6			0.0	0.0	0.0	0.0	0.0		0.0	0.0	0.0	0.0		
DIMETHYLPHTHALATE			0.0	0.0	0.0	0.0	0.0		0.0	0.0	0.0	0.0		
SODIUM STEARATE			0.0	0.0	0.0	0.0	0.0		0.0	0.0	0.0	0.0		
C7H6O2			0.0	0.0	0.0	0.0	0.0		0.0	0.0	0.0	0.0		
NANO2			0.0	0.0	0.0	0.0	0.0		0.0	0.0	0.0	0.0		
NANO3			0.0	4.3	0.0	0.0	0.0		0.0	0.0	0.0	0.0		
SODIUM FORMATE			0.0	0.0	0.0	0.0	0.0		0.0	0.0	0.0	0.0		
SODIUM ACETATE			0.0	0.0	0.0	0.0	0.0		0.0	0.0	0.0	0.0		
GLYCEROL			0.0	0.0	0.0	0.0	0.0		0.0	0.0	0.0	0.0		
NACL			0.0	0.0	44.0	0.0	0.0		0.0	0.0	0.0	0.0		
NAHSO4			0.0	0.0	0.0	0.0	0.0		0.0	0.0	0.0	0.0		
NA2SO4			0.0	0.0	114.2	0.0	0.0		0.0	0.0	0.0	0.0		
NAH2PO4			0.0	0.0	7.5	0.0	0.0		0.0	0.0	0.0	0.0		
HF			0.0	0.0	0.0	0.0	0.0		0.0	0.0	0.0	0.0		
H3PO4			0.0	0.0	10.5	0.0	0.0		0.0	0.0	0.0	0.0		
SULFUR			0.0	0.0	0.0	0.0	0.0		0.0	0.0	0.0	0.0		
IRON			0.0	0.0	0.0	0.0	0.0		0.0	0.0	0.0	0.0		
Total VAPOR lb/hr	0.0	0.0	2320.0	2330.0	3519.1	100.0	100.0	0.0	2452.8	2311.5	2311.5	2311.5	0.0	0.0
Mass Flow LIQUID lb/hr														
H2O				828.4				7466.0	8400.6	8514.4			8514.4	8514.4
ISOPROPANOL				137.4				0.0	0.0	0.0			0.0	0.0
ETHANOL				0.7				0.0	0.0	0.0			0.0	0.0
CO2				0.0				0.0	39.5	64.4			64.4	64.4
HCL				4.1				0.0	0.0	0.0			0.0	0.0
H2SO4				22.0				0.0	0.0	0.0			0.0	0.0
NAOH				10.1				0.0	0.0	0.0			0.0	0.0
MPA-NA2				2.2				0.0	0.0	0.0			0.0	0.0
DIISOPROPYLUREA				1.3				0.0	0.0	0.0			0.0	0.0
RSSR				1.0				0.0	0.0	0.0			0.0	0.0
EMPA-NA				22.4				0.0	0.0	0.0			0.0	0.0
RS-NA				28.3				0.0	0.0	0.0			0.0	0.0
O2				1.2				0.0	1.2	1.7			1.7	1.7
N2				2.2				0.0	14.8	16.9			16.9	16.9
H2				0.0				0.0	0.0	0.0			0.0	0.0
N2O				0.0				0.0	0.0	0.1			0.1	0.1
NH4CL				4.4				0.0	0.0	0.0			0.0	0.0
C5CL6				0.0				0.0	0.0	0.0			0.0	0.0
DIMETHYLPHTHALATE				0.3				0.0	0.0	0.0			0.0	0.0
SODIUM STEARATE				0.3				0.0	0.0	0.0			0.0	0.0
C7H6O2				0.0				0.0	0.0	0.0			0.0	0.0
NANO2				11.1				0.0	0.0	0.0			0.0	0.0
NANO3				1.1				0.0	0.0	0.0			0.0	0.0
SODIUM FORMATE				11.8				0.0	0.0	0.0			0.0	0.0
SODIUM ACETATE				12.2				0.0	0.0	0.0			0.0	0.0
GLYCEROL				1.0				0.0	0.0	0.0			0.0	0.0
NACL				26.3				0.0	44.0	44.0			44.0	44.0
NAHSO4				0.0				0.0	0.0	0.0			0.0	0.0
NA2SO4				59.3				0.0	114.2	114.2			114.2	114.2
NAH2PO4				0.0				0.0	7.5	7.5			7.5	7.5
HF				0.0				0.0	0.0	0.0			0.0	0.0
H3PO4				0.0				0.0	10.5	10.5			10.5	10.5
SULFUR				0.1				0.0	0.0	0.0			0.0	0.0
IRON				0.0				0.0	0.0	0.0			0.0	0.0
Total LIQUID lb/hr	0.0	0.0	0.0	1189.2	0.0	0.0	0.0	7466.0	8632.4	8773.7	0.0	0.0	8773.7	8773.7

Stream Number:	29	30	31	32	33	34	35	36	37	38	39	40	41	42
Stream Description:	LP Liquid Effluent	Gas Effluent from LP GLS	Recomb. Gas Effluent	Liquid Effluent from LP GLS	Liquid Effluent to BRS	Liquid Effluent to Off-Spec Tank	Off-Spec Effluent to Blend Tanks	Cooling Water Supply	Cooling Water to Reactor Flanges	Cooling Water From Reactor Flanges	Cooling Water Return	Flush Water Supply	Flush Water After Flush Heater	LP Quench Additives
Temperature F	146.8	146.8	48.9	146.8	146.8			90.0	90.0	106.0	120.0			
Pressure psi	30.0	30.0	30.0	30.0	30.0			45.0	45.0	45.0	45.0			
Volume Flow cuft/hr	623.9	478.8	14481.7	145.0	145.0			1127.4	40.2	40.4	1134.8			
Enthalpy MMBtu/hr	-58.041	-0.246	-1.625	-57.795	-57.795			-477.134	-17.031	-16.991	-475.037			
Average Flow lb/hr	8773.7	80.7	2392.2	8692.9	8692.9	0.0	0.0	70040.3	2500.0	2500.0	70040.3	0.0	0.0	0.0
Instantaneous Flow lb/hr	8773.7	80.7	2392.2	8692.9	8692.9	0.0	0.0	70040.3	2500.0	2500.0	70040.3	0.0	0.0	0.0
Mass Flow VAPOR lb/hr														
H2O	4.6	4.6	8.4											
ISOPROPANOL	0.0	0.0	0.0											
ETHANOL	0.0	0.0	0.0											
CO2	57.4	57.4	405.1											
HCL	0.0	0.0	0.0											
H2SO4	0.0	0.0	0.0											
NAOH	0.0	0.0	0.0											
MPA-NA2	0.0	0.0	0.0											
DIISOPROPYLUREA	0.0	0.0	0.0											
RSSR	0.0	0.0	0.0											
EMPA-NA	0.0	0.0	0.0											
RS-NA	0.0	0.0	0.0											
O2	1.7	1.7	112.9											
N2	16.8	16.8	1864.2											
H2	0.0	0.0	0.0											
N2O	0.1	0.1	1.3											
NH4CL	0.0	0.0	0.0											
C5CL6	0.0	0.0	0.0											
DIMETHYLPHTHALATE	0.0	0.0	0.0											
SODIUM STEARATE	0.0	0.0	0.0											
C7H6O2	0.0	0.0	0.0											
NANO2	0.0	0.0	0.0											
NANO3	0.0	0.0	0.0											
SODIUM FORMATE	0.0	0.0	0.0											
SODIUM ACETATE	0.0	0.0	0.0											
GLYCEROL	0.0	0.0	0.0											
NACL	0.0	0.0	0.0											
NAHSO4	0.0	0.0	0.0											
NA2SO4	0.0	0.0	0.0											
NAH2PO4	0.0	0.0	0.0											
HF	0.0	0.0	0.0											
H3PO4	0.0	0.0	0.0											
SULFUR	0.0	0.0	0.0											
IRON	0.0	0.0	0.0											
Total VAPOR lb/hr	80.7	80.7	2391.9	0.0	0.0	0.0	0.0	0.0	0.0	0.0	0.0	0.0	0.0	0.0
Mass Flow LIQUID lb/hr														
H2O	8509.7		0.3	8509.7	8509.7			70040.3	2500.0	2500.0	70040.3			
ISOPROPANOL	0.0		0.0	0.0	0.0			0.0	0.0	0.0	0.0			
ETHANOL	0.0		0.0	0.0	0.0			0.0	0.0	0.0	0.0			
CO2	7.0		0.0	7.0	7.0			0.0	0.0	0.0	0.0			
HCL	0.0		0.0	0.0	0.0			0.0	0.0	0.0	0.0			
H2SO4	0.0		0.0	0.0	0.0			0.0	0.0	0.0	0.0			
NAOH	0.0		0.0	0.0	0.0			0.0	0.0	0.0	0.0			
MPA-NA2	0.0		0.0	0.0	0.0			0.0	0.0	0.0	0.0			
DIISOPROPYLUREA	0.0		0.0	0.0	0.0			0.0	0.0	0.0	0.0			
RSSR	0.0		0.0	0.0	0.0			0.0	0.0	0.0	0.0			
EMPA-NA	0.0		0.0	0.0	0.0			0.0	0.0	0.0	0.0			
RS-NA	0.0		0.0	0.0	0.0			0.0	0.0	0.0	0.0			
O2	0.0		0.0	0.0	0.0			0.0	0.0	0.0	0.0			
N2	0.1		0.0	0.1	0.1			0.0	0.0	0.0	0.0			
H2	0.0		0.0	0.0	0.0			0.0	0.0	0.0	0.0			
N2O	0.0		0.0	0.0	0.0			0.0	0.0	0.0	0.0			
NH4CL	0.0		0.0	0.0	0.0			0.0	0.0	0.0	0.0			
C5CL6	0.0		0.0	0.0	0.0			0.0	0.0	0.0	0.0			
DIMETHYLPHTHALATE	0.0		0.0	0.0	0.0			0.0	0.0	0.0	0.0			
SODIUM STEARATE	0.0		0.0	0.0	0.0			0.0	0.0	0.0	0.0			
C7H6O2	0.0		0.0	0.0	0.0			0.0	0.0	0.0	0.0			
NANO2	0.0		0.0	0.0	0.0			0.0	0.0	0.0	0.0			
NANO3	0.0		0.0	0.0	0.0			0.0	0.0	0.0	0.0			
SODIUM FORMATE	0.0		0.0	0.0	0.0			0.0	0.0	0.0	0.0			
SODIUM ACETATE	0.0		0.0	0.0	0.0			0.0	0.0	0.0	0.0			
GLYCEROL	0.0		0.0	0.0	0.0			0.0	0.0	0.0	0.0			
NACL	44.0		0.0	44.0	44.0			0.0	0.0	0.0	0.0			
NAHSO4	0.0		0.0	0.0	0.0			0.0	0.0	0.0	0.0			
NA2SO4	114.2		0.0	114.2	114.2			0.0	0.0	0.0	0.0			
NAH2PO4	7.5		0.0	7.5	7.5			0.0	0.0	0.0	0.0			
HF	0.0		0.0	0.0	0.0			0.0	0.0	0.0	0.0			
H3PO4	10.5		0.0	10.5	10.5			0.0	0.0	0.0	0.0			
SULFUR	0.0		0.0	0.0	0.0			0.0	0.0	0.0	0.0			
IRON	0.0		0.0	0.0	0.0			0.0	0.0	0.0	0.0			
Total LIQUID lb/hr	8692.9	0.0	0.3	8692.9	8692.9	0.0	0.0	70040.3	2500.0	2500.0	70040.3	0.0	0.0	0.0

CASE 2B: VX BLENDED HYDROLYSATE FEED BASE CASE (FEED RATIO 1.8:1)

Stream Number:	1	2	3	4	5	6	7	8	9	10	11	12	13	14
Stream Description:	LP Fuel	HP Fuel	LP Agent Hydrolysate	LP Energetics Hydrolysate	LP Feed Additives	LP Blended Hydrolysate	HP Blended Hydrolysate	LP Feed Water	LP Quench Water	HP Feed Water	LP Dunnage from DSH	LP Dunnage to HP Slurry Pump	Process Water to HP Slurry Pump	HP Dunnage/ Water
Temperature F	70.0	96.7	80.0	80.0	80.0	80.0	182.1		70.0					
Pressure psi	14.3	3415.0	14.3	14.3	14.3	14.3	3415.0		14.3					
Volume Flow cuft/hr	3.6	3.6	8.7	13.5	0.6	22.8	20.6		119.1					
Enthalpy MMBtu/hr	-0.681	-0.676	-1.987	-3.535	-0.195	-5.714	-5.688		-50.658					
Average Flow lb/hr	186.8	186.8	340.7	613.4	45.9	1000.0	1000.0	0.0	7420.4	0.0	0.0	0.0	0.0	0.0
Instantaneous Flow lb/hr	186.8	186.8	3407.0	6134.0	459.0	1000.0	1000.0	0.0	7420.4	0.0	0.0	0.0	0.0	0.0
Mass Flow VAPOR lb/hr														
H2O														
ISOPROPANOL														
ETHANOL														
CO2														
HCL														
H2SO4														
NAOH														
MPA-NA2														
DIISOPROPYLUREA														
RSSR														
EMPA-NA														
RS-NA														
O2														
N2														
H2														
N2O														
NH4CL														
C5CL6														
DIMETHYLPHTHALATE														
SODIUM STEARATE														
C7H6O2														
NANO2														
NANO3														
SODIUM FORMATE														
SODIUM ACETATE														
GLYCEROL														
NACL														
NAHSO4														
NA2SO4														
NAH2PO4														
HF														
H3PO4														
SULFUR														
IRON														
Total VAPOR lb/hr	0.0	0.0	0.0	0.0	0.0	0.0	0.0	0.0	0.0	0.0	0.0	0.0	0.0	0.0
Mass Flow LIQUID lb/hr														
H2O	56.0	56.0	257.9	494.9	16.1	768.9	768.9		7420.4					
ISOPROPANOL	130.7	130.7	0.0	0.0	0.0	0.0	0.0		0.0					
ETHANOL	0.0	0.0	0.9	0.0	0.0	0.9	0.9		0.0					
CO2	0.0	0.0	0.0	0.0	0.0	0.0	0.0		0.0					
HCL	0.0	0.0	0.0	0.0	9.2	9.2	9.2		0.0					
H2SO4	0.0	0.0	0.0	0.0	20.6	20.6	20.6		0.0					
NAOH	0.0	0.0	12.6	0.0	0.0	12.6	12.6		0.0					
MPA-NA2	0.0	0.0	2.8	0.0	0.0	2.8	2.8		0.0					
DIISOPROPYLUREA	0.0	0.0	1.6	0.0	0.0	1.6	1.6		0.0					
RSSR	0.0	0.0	1.2	0.0	0.0	1.2	1.2		0.0					
EMPA-NA	0.0	0.0	28.0	0.0	0.0	28.0	28.0		0.0					
RS-NA	0.0	0.0	35.3	0.0	0.0	35.3	35.3		0.0					
O2	0.0	0.0	0.0	0.0	0.0	0.0	0.0		0.0					
N2	0.0	0.0	0.0	0.0	0.0	0.0	0.0		0.0					
H2	0.0	0.0	0.0	0.0	0.0	0.0	0.0		0.0					
N2O	0.0	0.0	0.0	0.0	0.0	0.0	0.0		0.0					
NH4CL	0.0	0.0	0.0	4.0	0.0	4.0	4.0		0.0					
C5CL6	0.0	0.0	0.0	0.0	0.0	0.0	0.0		0.0					
DIMETHYLPHTHALATE	0.0	0.0	0.0	0.3	0.0	0.3	0.3		0.0					
SODIUM STEARATE	0.0	0.0	0.0	0.3	0.0	0.3	0.3		0.0					
C7H6O2	0.0	0.0	0.0	0.0	0.0	0.0	0.0		0.0					
NANO2	0.0	0.0	0.0	9.9	0.0	9.9	9.9		0.0					
NANO3	0.0	0.0	0.0	4.8	0.0	4.8	4.8		0.0					
SODIUM FORMATE	0.0	0.0	0.0	10.6	0.0	10.6	10.6		0.0					
SODIUM ACETATE	0.0	0.0	0.0	10.9	0.0	10.9	10.9		0.0					
GLYCEROL	0.0	0.0	0.0	0.9	0.0	0.9	0.9		0.0					
NACL	0.0	0.0	0.0	23.6	0.0	23.6	23.6		0.0					
NAHSO4	0.0	0.0	0.0	0.0	0.0	0.0	0.0		0.0					
NA2SO4	0.0	0.0	0.2	53.1	0.0	53.4	53.4		0.0					
NAH2PO4	0.0	0.0	0.0	0.0	0.0	0.0	0.0		0.0					
HF	0.0	0.0	0.0	0.0	0.0	0.0	0.0		0.0					
H3PO4	0.0	0.0	0.0	0.0	0.0	0.0	0.0		0.0					
SULFUR	0.0	0.0	0.1	0.0	0.0	0.1	0.1		0.0					
IRON	0.0	0.0	0.0	0.0	0.0	0.0	0.0		0.0					
Total LIQUID lb/hr	186.8	186.8	340.7	613.4	45.9	1000.0	1000.0	0.0	7420.4	0.0	0.0	0.0	0.0	0.0

Stream Number:	15	16	17	18	19	20	21	22	23	24	25	26	27	28
Stream Description:	HP Dunnage/ Water to Preheater	HP Dunnage/ Water After Preheater	Air	Combined Nozzle Feed	Pre-Quench Reaction Products	Liner Purge Gas	Liner Purge Gas After Heating	HP Quench Water	Quenched Effluent	Cooled Effluent	Gas Effluent from HP GLS	LP Gas Effluent	Liquid Effluent from HP GLS	Liquid Effluent from SLS
Temperature F			70.0	126.6	1200.0	70.0	600.0	81.0	355.0	140.0	140.0	45.0	140.0	140.0
Pressure psi			3415.0	3415.0	3415.0	3415.0	3415.0	3415.0	3415.0	3415.0	3415.0	30.0	3415.0	3415.0
Volume Flow cuft/hr			139.1	180.0	709.2	6.2	12.8	118.1	380.0	295.3	151.2	14071.3	144.1	144.1
Enthalpy MMBtu/hr			-0.042	-6.406	-6.461	-0.002	0.013	-50.508	-56.956	-59.042	-1.361	-1.377	-57.681	-57.681
Average Flow lb/hr	0.0	0.0	2338.4	3525.1	3525.1	100.0	100.0	7420.4	11045.5	11045.5	2326.2	2326.2	8719.3	8719.3
Instantaneous Flow lb/hr	0.0	0.0	2338.4	3525.1	3525.1	100.0	100.0	7420.4	11045.5	11045.5	2326.2	2326.2	8719.3	8719.3
Mass Flow VAPOR lb/hr														
H2O			0.0	2.7	1043.9	0.0	0.0		118.6	4.1	4.1	4.1		
ISOPROPANOL			0.0	1.8	0.0	0.0	0.0		0.0	0.0	0.0	0.0		
ETHANOL			0.0	0.0	0.0	0.0	0.0		0.0	0.0	0.0	0.0		
CO2			0.0	0.0	410.8	0.0	0.0		371.8	347.3	347.3	347.3		
HCL			0.0	4.4	0.0	0.0	0.0		0.0	0.0	0.0	0.0		
H2SO4			0.0	0.0	0.0	0.0	0.0		0.0	0.0	0.0	0.0		
NAOH			0.0	0.0	0.0	0.0	0.0		0.0	0.0	0.0	0.0		
MPA-NA2			0.0	0.0	0.0	0.0	0.0		0.0	0.0	0.0	0.0		
DIISOPROPYLUREA			0.0	0.0	0.0	0.0	0.0		0.0	0.0	0.0	0.0		
RSSR			0.0	0.0	0.0	0.0	0.0		0.0	0.0	0.0	0.0		
EMPA-NA			0.0	0.0	0.0	0.0	0.0		0.0	0.0	0.0	0.0		
RS-NA			0.0	0.0	0.0	0.0	0.0		0.0	0.0	0.0	0.0		
O2			542.5	541.3	90.4	23.2	23.2		112.4	111.9	111.9	111.9		
N2			1795.9	1793.7	1801.8	76.8	76.8		1863.8	1861.8	1861.8	1861.8		
H2			0.0	0.0	0.0	0.0	0.0		0.0	0.0	0.0	0.0		
N2O			0.0	0.0	1.3	0.0	0.0		1.3	1.2	1.2	1.2		
NH4CL			0.0	0.0	0.0	0.0	0.0		0.0	0.0	0.0	0.0		
C5CL6			0.0	0.0	0.0	0.0	0.0		0.0	0.0	0.0	0.0		
DIMETHYLPHTHALATE			0.0	0.0	0.0	0.0	0.0		0.0	0.0	0.0	0.0		
SODIUM STEARATE			0.0	0.0	0.0	0.0	0.0		0.0	0.0	0.0	0.0		
C7H6O2			0.0	0.0	0.0	0.0	0.0		0.0	0.0	0.0	0.0		
NANO2			0.0	0.0	0.0	0.0	0.0		0.0	0.0	0.0	0.0		
NANO3			0.0	4.0	0.0	0.0	0.0		0.0	0.0	0.0	0.0		
SODIUM FORMATE			0.0	0.0	0.0	0.0	0.0		0.0	0.0	0.0	0.0		
SODIUM ACETATE			0.0	0.0	0.0	0.0	0.0		0.0	0.0	0.0	0.0		
GLYCEROL			0.0	0.0	0.0	0.0	0.0		0.0	0.0	0.0	0.0		
NACL			0.0	0.0	42.7	0.0	0.0		0.0	0.0	0.0	0.0		
NAHSO4			0.0	0.0	0.0	0.0	0.0		0.0	0.0	0.0	0.0		
NA2SO4			0.0	0.0	111.9	0.0	0.0		0.0	0.0	0.0	0.0		
NAH2PO4			0.0	0.0	9.3	0.0	0.0		0.0	0.0	0.0	0.0		
HF			0.0	0.0	0.0	0.0	0.0		0.0	0.0	0.0	0.0		
H3PO4			0.0	0.0	13.1	0.0	0.0		0.0	0.0	0.0	0.0		
SULFUR			0.0	0.0	0.0	0.0	0.0		0.0	0.0	0.0	0.0		
IRON			0.0	0.0	0.0	0.0	0.0		0.0	0.0	0.0	0.0		
Total VAPOR lb/hr	0.0	0.0	2338.4	2348.0	3525.1	100.0	100.0	0.0	2467.8	2326.2	2326.2	2326.2	0.0	0.0
Mass Flow LIQUID lb/hr														
H2O				822.3				7420.4	8345.7	8460.2			8460.2	8460.2
ISOPROPANOL				128.9				0.0	0.0	0.0			0.0	0.0
ETHANOL				0.9				0.0	0.0	0.0			0.0	0.0
CO2				0.0				0.0	39.0	63.5			63.5	63.5
HCL				4.8				0.0	0.0	0.0			0.0	0.0
H2SO4				20.6				0.0	0.0	0.0			0.0	0.0
NAOH				12.6				0.0	0.0	0.0			0.0	0.0
MPA-NA2				2.8				0.0	0.0	0.0			0.0	0.0
DIISOPROPYLUREA				1.6				0.0	0.0	0.0			0.0	0.0
RSSR				1.2				0.0	0.0	0.0			0.0	0.0
EMPA-NA				28.0				0.0	0.0	0.0			0.0	0.0
RS-NA				35.3				0.0	0.0	0.0			0.0	0.0
O2				1.2				0.0	1.2	1.7			1.7	1.7
N2				2.2				0.0	14.8	16.8			16.8	16.8
H2				0.0				0.0	0.0	0.0			0.0	0.0
N2O				0.0				0.0	0.0	0.1			0.1	0.1
NH4CL				4.0				0.0	0.0	0.0			0.0	0.0
C5CL6				0.0				0.0	0.0	0.0			0.0	0.0
DIMETHYLPHTHALATE				0.3				0.0	0.0	0.0			0.0	0.0
SODIUM STEARATE				0.3				0.0	0.0	0.0			0.0	0.0
C7H6O2				0.0				0.0	0.0	0.0			0.0	0.0
NANO2				9.9				0.0	0.0	0.0			0.0	0.0
NANO3				0.8				0.0	0.0	0.0			0.0	0.0
SODIUM FORMATE				10.6				0.0	0.0	0.0			0.0	0.0
SODIUM ACETATE				10.9				0.0	0.0	0.0			0.0	0.0
GLYCEROL				0.9				0.0	0.0	0.0			0.0	0.0
NACL				23.6				0.0	42.7	42.7			42.7	42.7
NAHSO4				0.0				0.0	0.0	0.0			0.0	0.0
NA2SO4				53.4				0.0	111.9	111.9			111.9	111.9
NAH2PO4				0.0				0.0	9.3	9.3			9.3	9.3
HF				0.0				0.0	0.0	0.0			0.0	0.0
H3PO4				0.0				0.0	13.1	13.1			13.1	13.1
SULFUR				0.1				0.0	0.0	0.0			0.0	0.0
IRON				0.0				0.0	0.0	0.0			0.0	0.0
Total LIQUID lb/hr	0.0	0.0	0.0	1177.2	0.0	0.0	0.0	7420.4	8577.6	8719.3	0.0	0.0	8719.3	8719.3

Stream Number:	29	30	31	32	33	34	35	36	37	38	39	40	41	42
Stream Description:	LP Liquid Effluent	Gas Effluent from LP GLS	Recomb. Gas Effluent	Liquid Effluent from LP GLS	Liquid Effluent to BRS	Liquid Effluent to Off-Spec Tank	Off-Spec Effluent to Blend Tanks	Cooling Water Supply	Cooling Water to Reactor Flanges	Cooling Water From Reactor Flanges	Cooling Water Return	Flush Water Supply	Flush Water After Flush Heater	LP Quench Additives
Temperature F	146.9	146.9	48.7	146.9	146.9			90.0	90.0	106.0	120.0			
Pressure psi	30.0	30.0	30.0	30.0	30.0			45.0	45.0	45.0	45.0			
Volume Flow cuft/hr	617.5	473.4	14569.7	144.1	144.1			1121.8	40.2	40.4	1129.1			
Enthalpy MMBtu/hr	-57.681	-0.243	-1.620	-57.438	-57.438			-474.756	-17.031	-16.991	-472.669			
Average Flow lb/hr	8719.3	79.7	2406.0	8639.5	8639.5	0.0	0.0	69691.1	2500.0	2500.0	69691.1	0.0	0.0	0.0
Instantaneous Flow lb/hr	8719.3	79.7	2406.0	8639.5	8639.5	0.0	0.0	69691.1	2500.0	2500.0	69691.1	0.0	0.0	0.0
Mass Flow VAPOR lb/hr														
H2O	4.6	4.6	8.4											
ISOPROPANOL	0.0	0.0	0.0											
ETHANOL	0.0	0.0	0.0											
CO2	56.6	56.6	403.9											
HCL	0.0	0.0	0.0											
H2SO4	0.0	0.0	0.0											
NAOH	0.0	0.0	0.0											
MPA-NA2	0.0	0.0	0.0											
DIISOPROPYLUREA	0.0	0.0	0.0											
RSSR	0.0	0.0	0.0											
EMPA-NA	0.0	0.0	0.0											
RS-NA	0.0	0.0	0.0											
O2	1.7	1.7	113.6											
N2	16.7	16.7	1878.5											
H2	0.0	0.0	0.0											
N2O	0.1	0.1	1.3											
NH4CL	0.0	0.0	0.0											
C5CL6	0.0	0.0	0.0											
DIMETHYLPHTHALATE	0.0	0.0	0.0											
SODIUM STEARATE	0.0	0.0	0.0											
C7H6O2	0.0	0.0	0.0											
NANO2	0.0	0.0	0.0											
NANO3	0.0	0.0	0.0											
SODIUM FORMATE	0.0	0.0	0.0											
SODIUM ACETATE	0.0	0.0	0.0											
GLYCEROL	0.0	0.0	0.0											
NACL	0.0	0.0	0.0											
NAHSO4	0.0	0.0	0.0											
NA2SO4	0.0	0.0	0.0											
NAH2PO4	0.0	0.0	0.0											
HF	0.0	0.0	0.0											
H3PO4	0.0	0.0	0.0											
SULFUR	0.0	0.0	0.0											
IRON	0.0	0.0	0.0											
Total VAPOR lb/hr	79.7	79.7	2405.7	0.0	0.0	0.0	0.0	0.0	0.0	0.0	0.0	0.0	0.0	0.0
Mass Flow LIQUID lb/hr														
H2O	8455.6		0.3	8455.6	8455.6			69691.1	2500.0	2500.0	69691.1			
ISOPROPANOL	0.0		0.0	0.0	0.0			0.0	0.0	0.0	0.0			
ETHANOL	0.0		0.0	0.0	0.0			0.0	0.0	0.0	0.0			
CO2	6.9		0.0	6.9	6.9			0.0	0.0	0.0	0.0			
HCL	0.0		0.0	0.0	0.0			0.0	0.0	0.0	0.0			
H2SO4	0.0		0.0	0.0	0.0			0.0	0.0	0.0	0.0			
NAOH	0.0		0.0	0.0	0.0			0.0	0.0	0.0	0.0			
MPA-NA2	0.0		0.0	0.0	0.0			0.0	0.0	0.0	0.0			
DIISOPROPYLUREA	0.0		0.0	0.0	0.0			0.0	0.0	0.0	0.0			
RSSR	0.0		0.0	0.0	0.0			0.0	0.0	0.0	0.0			
EMPA-NA	0.0		0.0	0.0	0.0			0.0	0.0	0.0	0.0			
RS-NA	0.0		0.0	0.0	0.0			0.0	0.0	0.0	0.0			
O2	0.0		0.0	0.0	0.0			0.0	0.0	0.0	0.0			
N2	0.1		0.0	0.1	0.1			0.0	0.0	0.0	0.0			
H2	0.0		0.0	0.0	0.0			0.0	0.0	0.0	0.0			
N2O	0.0		0.0	0.0	0.0			0.0	0.0	0.0	0.0			
NH4CL	0.0		0.0	0.0	0.0			0.0	0.0	0.0	0.0			
C5CL6	0.0		0.0	0.0	0.0			0.0	0.0	0.0	0.0			
DIMETHYLPHTHALATE	0.0		0.0	0.0	0.0			0.0	0.0	0.0	0.0			
SODIUM STEARATE	0.0		0.0	0.0	0.0			0.0	0.0	0.0	0.0			
C7H6O2	0.0		0.0	0.0	0.0			0.0	0.0	0.0	0.0			
NANO2	0.0		0.0	0.0	0.0			0.0	0.0	0.0	0.0			
NANO3	0.0		0.0	0.0	0.0			0.0	0.0	0.0	0.0			
SODIUM FORMATE	0.0		0.0	0.0	0.0			0.0	0.0	0.0	0.0			
SODIUM ACETATE	0.0		0.0	0.0	0.0			0.0	0.0	0.0	0.0			
GLYCEROL	0.0		0.0	0.0	0.0			0.0	0.0	0.0	0.0			
NACL	42.7		0.0	42.7	42.7			0.0	0.0	0.0	0.0			
NAHSO4	0.0		0.0	0.0	0.0			0.0	0.0	0.0	0.0			
NA2SO4	111.9		0.0	111.9	111.9			0.0	0.0	0.0	0.0			
NAH2PO4	9.3		0.0	9.3	9.3			0.0	0.0	0.0	0.0			
HF	0.0		0.0	0.0	0.0			0.0	0.0	0.0	0.0			
H3PO4	13.1		0.0	13.1	13.1			0.0	0.0	0.0	0.0			
SULFUR	0.0		0.0	0.0	0.0			0.0	0.0	0.0	0.0			
IRON	0.0		0.0	0.0	0.0			0.0	0.0	0.0	0.0			
Total LIQUID lb/hr	8639.5	0.0	0.3	8639.5	8639.5	0.0	0.0	69691.1	2500.0	2500.0	69691.1	0.0	0.0	0.0

Blayne Monen
cn=Blayne Monen, o=Issued, ou=Configuration Management, c=US
Signature Valid 2004.07.12 17:10:54 -07'00'

NO.	DATE	DESCRIPTION	DR	CK	DL	PE	APPD
2	7-12-04	IFD, UPDATED CASE 3	JG	SV	KD	NW	DJ
1	6-30-04	IFD, INCORPORATED COMMENTS, ADDED EQUIP SPECS	JG	SV	KD	NW	DJ
0	5-7-04	IFD, UPDATED W/ CURRENT M&EB DATA	JG	SV	KD	NW	DJ

QUALITY ☐ LEVEL 1 ☒ LEVEL 2 ☒ LEVEL 3 ☐ ALL

BECHTEL PARSONS BLUE GRASS
A Joint Venture of Bechtel National, INC. and Parsons Infrastructure & Technology Group Inc.

DOD PROGRAM MANAGER FOR ASSEMBLED CHEMICAL WEAPONS ASSESSMENT EDGEWOOD, MARYLAND

US ARMY ENGINEERING AND SUPPORT CENTER, HUNTSVILLE HUNTSVILLE, ALABAMA

GENERAL ATOMICS

BLUE GRASS CHEMICAL AGENT DESTRUCTION PILOT PLANT PROJECT (BGCAPP)
RICHMOND, KENTUCKY

CONTRACT NO. DAAA09-03-D-0023

SCWO PROCESS FLOW DIAGRAM

PROFESSIONAL STAMP

DRAWING NUMBER 24915-10-M5-SCWO-00001 | SHEET 4 OF 8 | REV 2

bgcapp_d3.dwg

CASE 3: H BLENDED HYDROLYSATE FEED BASE CASE

Stream Number:	1	2	3	4	5	6	7	8	9	10	11	12	13	14	15	16
Stream Description:	LP Fuel	HP Fuel	LP Agent Hydrolysate	LP Energetics Hydrolysate	LP Feed Additives	LP Blended Hydrolysate	HP Blended Hydrolysate	LP Feed Water	LP Quench Water	HP Feed Water	LP Dunnage from DSH	LP Dunnage to HP Slurry Pump	Process Water to HP Slurry Pump	HP Dunnage/ Water	HP Dunnage/ Water to Preheater	HP Dunnage/ Water After Preheater
Temperature F	70.0	96.7	80.0	80.0	80.0	79.7	196.3		70.0							
Pressure psi	14.3	3415.0	14.3	14.3	14.3	14.3	3415.0		14.3							
Volume Flow cuft/hr	4.1	4.2	9.2	10.7	2.3	22.2	19.5		100.6							
Enthalpy Mbtu/hr	-0.785	-0.780	-2.979	-2.772	-0.134	-5.865	-5.861		-42.768							
Average Mass Flow lb/hr	215.3	215.3	483.3	483.2	33.6	1000.1	1000.1	0.0	6264.7	0.0	0.0	0.0	0.0	0.0	0.0	0.0
Instantaneous Mass Flow lb/hr	215.3	215.3	483.3	483.2	33.6	1000.1	1000.1	0.0	6264.7	0.0	0.0	0.0	0.0	0.0	0.0	0.0
Mass Flow VAPOR lb/hr																
H2O																
ISOPROPANOL																
C2H6O2																
THIODIGLYCOL																
Q-OH																
C6H13S2O																
TRITHIOLANE																
DITHIANE																
CL2																
CO2																
HCL																
H2SO4																
NAOH																
HCLO																
O2																
N2																
H2																
N2O																
NH4CL																
C5CL6																
DIMETHYLPHTHALATE																
SODIUM STEARATE																
C7H6O2																
GLYCEROL																
NANO2																
NANO3																
SODIUM FORMATE																
SODIUM ACETATE																
NACL																
NAF																
NAHSO4																
NA2SO4																
NAH2PO4																
HF																
FE																
SULFUR																
FE2O3																
Total VAPOR lb/hr	0.0	0.0	0.0	0.0	0.0	0.0	0.0	0.0	0.0	0.0	0.0	0.0	0.0	0.0	0.0	0.0
Mass Flow LIQUID lb/hr																
H2O	64.6	64.6	427.8	389.2	16.8	833.8	833.8		6264.7							
ISOPROPANOL	150.7	150.7	0.0	0.0	0.0	0.0	0.0		0.0							
C2H6O2	0.0	0.0	0.2	0.0	0.0	0.2	0.2		0.0							
THIODIGLYCOL	0.0	0.0	16.1	0.0	0.0	16.1	16.1		0.0							
Q-OH	0.0	0.0	2.4	0.0	0.0	2.4	2.4		0.0							
C6H13S2O	0.0	0.0	7.4	0.0	0.0	7.4	7.4		0.0							
TRITHIOLANE	0.0	0.0	0.6	0.0	0.0	0.6	0.6		0.0							
DITHIANE	0.0	0.0	0.5	0.0	0.0	0.5	0.5		0.0							
CL2	0.0	0.0	0.0	0.0	0.0	0.0	0.0		0.0							
CO2	0.0	0.0	0.0	0.0	0.0	0.0	0.0		0.0							
HCL	0.0	0.0	0.0	0.0	0.0	0.0	0.0		0.0							
H2SO4	0.0	0.0	0.0	0.0	0.0	0.0	0.0		0.0							
NAOH	0.0	0.0	0.2	0.0	16.8	17.0	17.0		0.0							
HCLO	0.0	0.0	0.0	0.0	0.0	0.0	0.0		0.0							
O2	0.0	0.0	0.0	0.0	0.0	0.0	0.0		0.0							
N2	0.0	0.0	0.0	0.0	0.0	0.0	0.0		0.0							
H2	0.0	0.0	0.0	0.0	0.0	0.0	0.0		0.0							
N2O	0.0	0.0	0.0	0.0	0.0	0.0	0.0		0.0							
NH4CL	0.0	0.0	0.0	3.3	0.0	3.3	3.3		0.0							
C5CL6	0.0	0.0	0.0	0.0	0.0	0.0	0.0		0.0							
DIMETHYLPHTHALATE	0.0	0.0	0.0	0.2	0.0	0.2	0.2		0.0							
SODIUM STEARATE	0.0	0.0	0.0	0.2	0.0	0.2	0.2		0.0							
C7H6O2	0.0	0.0	0.0	0.0	0.0	0.0	0.0		0.0							
GLYCEROL	0.0	0.0	0.0	0.5	0.0	0.5	0.5		0.0							
NANO2	0.0	0.0	0.0	6.7	0.0	6.7	6.7		0.0							
NANO3	0.0	0.0	0.0	3.1	0.0	3.1	3.1		0.0							
SODIUM FORMATE	0.0	0.0	0.0	7.9	0.0	7.9	7.9		0.0							
SODIUM ACETATE	0.0	0.0	0.0	7.1	0.0	7.1	7.1		0.0							
NACL	0.0	0.0	20.1	20.0	0.0	40.1	40.1		0.0							
NAF	0.0	0.0	0.0	0.0	0.0	0.0	0.0		0.0							
NAHSO4	0.0	0.0	0.0	0.0	0.0	0.0	0.0		0.0							
NA2SO4	0.0	0.0	0.0	45.0	0.0	45.0	45.0		0.0							
NAH2PO4	0.0	0.0	0.0	0.0	0.0	0.0	0.0		0.0							
HF	0.0	0.0	0.0	0.0	0.0	0.0	0.0		0.0							
FE	0.0	0.0	3.5	0.0	0.0	3.5	3.5		0.0							
SULFUR	0.0	0.0	4.4	0.0	0.0	4.4	4.4		0.0							
FE2O3	0.0	0.0	0.0	0.0	0.0	0.0	0.0		0.0							
Total LIQUID lb/hr	215.3	215.3	483.3	483.2	33.6	1000.1	1000.1	0.0	6264.7	0.0	0.0	0.0	0.0	0.0	0.0	0.0

Stream Number:	17	18	19	20	21	22	23	24	25	26	27	28	29	30
Stream Description:	Air	Combined Nozzle Feed	Pre-Quench Reaction Products		Liner Purge Gas After Heating	HP Quench Water	Quenched Effluent	Cooled Effluent	Gas Effluent from HP GLS	LP Gas Effluent	Liquid Effluent from HP GLS	Liquid Effluent from SLS	LP Liquid Effluent	Gas Effluent from LP GLS
Temperature F	70.0	136.9	1200.0	70.0	600.0	81.0	390.0	140.0	140.0	45.0	140.0	140.0	146.9	146.9
Pressure psi	3415.0	3415.0	3415.0	3415.0	3415.0	3415.0	3415.0	3415.0	3415.0	30.0	3415.0	3415.0	30.0	30.0
Volume Flow cuft/hr	132.2	173.9	702.6	6.2	12.8	99.7	366.2	269.3	143.8	13388.3	125.5	125.5	537.4	412.0
Enthalpy Mbtu/hr	-0.040	-6.680	-6.735	-0.002	0.013	-42.642	-49.364	-51.533	-1.295	-1.310	-50.239	-50.239	-50.239	-0.211
Average Mass Flow lb/hr	2222.2	3437.5	3437.5	100.0	100.0	6264.7	9802.2	9802.2	2213.2	2213.2	7589.1	7589.1	7589.1	69.4
Instantaneous Mass Flow lb/hr	2222.2	3437.5	3437.5	100.0	100.0	6264.7	9802.2	9802.2	2213.2	2213.2	7589.1	7589.1	7589.1	69.4
Mass Flow VAPOR lb/hr														
H2O	0.0	3.3	1107.5	0.0	0.0		171.1	3.9	3.9	3.9			4.0	4.0
ISOPROPANOL	0.0	2.3	0.0	0.0	0.0		0.0	0.0	0.0	0.0			0.0	0.0
C2H6O2	0.0	0.0	0.0	0.0	0.0		0.0	0.0	0.0	0.0			0.0	0.0
THIODIGLYCOL	0.0	0.0	0.0	0.0	0.0		0.0	0.0	0.0	0.0			0.0	0.0
Q-OH	0.0	0.0	0.0	0.0	0.0		0.0	0.0	0.0	0.0			0.0	0.0
C6H13S2O	0.0	0.0	0.0	0.0	0.0		0.0	0.0	0.0	0.0			0.0	0.0
TRITHIOLANE	0.0	0.0	0.0	0.0	0.0		0.0	0.0	0.0	0.0			0.0	0.0
DITHIANE	0.0	0.0	0.0	0.0	0.0		0.0	0.0	0.0	0.0			0.0	0.0
CL2	0.0	0.0	0.0	0.0	0.0		0.0	0.0	0.0	0.0			0.0	0.0
CO2	0.0	0.0	385.6	0.0	0.0		352.5	330.3	330.3	330.3			49.3	49.3
HCL	0.0	0.0	0.0	0.0	0.0		0.0	0.0	0.0	0.0			0.0	0.0
H2SO4	0.0	0.0	0.0	0.0	0.0		0.0	0.0	0.0	0.0			0.0	0.0
NAOH	0.0	0.0	0.0	0.0	0.0		0.0	0.0	0.0	0.0			0.0	0.0
HCLO	0.0	0.0	0.0	0.0	0.0		0.0	0.0	0.0	0.0			0.0	0.0
O2	515.5	514.3	85.9	23.2	23.2		108.1	107.6	107.6	107.6			1.5	1.5
N2	1706.6	1704.3	1708.8	76.8	76.8		1773.6	1770.9	1770.9	1770.9			14.6	14.6
H2	0.0	0.0	0.0	0.0	0.0		0.0	0.0	0.0	0.0			0.0	0.0
N2O	0.0	0.0	0.5	0.0	0.0		0.5	0.5	0.5	0.5			0.0	0.0
NH4CL	0.0	0.0	0.0	0.0	0.0		0.0	0.0	0.0	0.0			0.0	0.0
C5CL6	0.0	0.0	0.0	0.0	0.0		0.0	0.0	0.0	0.0			0.0	0.0
DIMETHYLPHTHALATE	0.0	0.0	0.0	0.0	0.0		0.0	0.0	0.0	0.0			0.0	0.0
SODIUM STEARATE	0.0	0.0	0.0	0.0	0.0		0.0	0.0	0.0	0.0			0.0	0.0
C7H6O2	0.0	0.0	0.0	0.0	0.0		0.0	0.0	0.0	0.0			0.0	0.0
GLYCEROL	0.0	0.0	0.0	0.0	0.0		0.0	0.0	0.0	0.0			0.0	0.0
NANO2	0.0	0.0	0.0	0.0	0.0		0.0	0.0	0.0	0.0			0.0	0.0
NANO3	0.0	0.0	0.0	0.0	0.0		0.0	0.0	0.0	0.0			0.0	0.0
SODIUM FORMATE	0.0	0.0	0.0	0.0	0.0		0.0	0.0	0.0	0.0			0.0	0.0
SODIUM ACETATE	0.0	0.0	0.0	0.0	0.0		0.0	0.0	0.0	0.0			0.0	0.0
NACL	0.0	0.0	0.0	0.0	0.0		0.0	0.0	0.0	0.0			0.0	0.0
NAF	0.0	0.0	0.0	0.0	0.0		0.0	0.0	0.0	0.0			0.0	0.0
NAHSO4	0.0	0.0	0.0	0.0	0.0		0.0	0.0	0.0	0.0			0.0	0.0
NA2SO4	0.0	0.0	0.0	0.0	0.0		0.0	0.0	0.0	0.0			0.0	0.0
NAH2PO4	0.0	0.0	0.0	0.0	0.0		0.0	0.0	0.0	0.0			0.0	0.0
HF	0.0	0.0	0.0	0.0	0.0		0.0	0.0	0.0	0.0			0.0	0.0
FE	0.0	0.0	0.0	0.0	0.0		0.0	0.0	0.0	0.0			0.0	0.0
SULFUR	0.0	0.0	0.0	0.0	0.0		0.0	0.0	0.0	0.0			0.0	0.0
FE2O3	0.0	0.0	0.0	0.0	0.0		0.0	0.0	0.0	0.0			0.0	0.0
Total VAPOR lb/hr	2222.2	2226.5	3437.5	100.0	100.0	0.0	2405.9	2213.2	2213.2	2213.2	0.0	0.0	69.4	69.4
Mass Flow LIQUID lb/hr														
H2O		895.2				6264.7	7201.1	7368.3			7368.3	7368.3	7364.3	
ISOPROPANOL		148.4				0.0	0.0	0.0			0.0	0.0	0.0	
C2H6O2		0.2				0.0	0.0	0.0			0.0	0.0	0.0	
THIODIGLYCOL		16.1				0.0	0.0	0.0			0.0	0.0	0.0	
Q-OH		2.4				0.0	0.0	0.0			0.0	0.0	0.0	
C6H13S2O		7.4				0.0	0.0	0.0			0.0	0.0	0.0	
TRITHIOLANE		0.6				0.0	0.0	0.0			0.0	0.0	0.0	
DITHIANE		0.5				0.0	0.0	0.0			0.0	0.0	0.0	
CL2		0.0				0.0	0.0	0.0			0.0	0.0	0.0	
CO2		0.0				0.0	33.1	55.3			55.3	55.3	6.0	
HCL		0.0				0.0	0.0	0.0			0.0	0.0	0.0	
H2SO4		0.0				0.0	0.0	0.0			0.0	0.0	0.0	
NAOH		17.0				0.0	0.0	0.0			0.0	0.0	0.0	
HCLO		0.0				0.0	0.0	0.0			0.0	0.0	0.0	
O2		1.2				0.0	1.0	1.5			1.5	1.5	0.0	
N2		2.4				0.0	12.0	14.6			14.6	14.6	0.1	
H2		0.0				0.0	0.0	0.0			0.0	0.0	0.0	
N2O		0.0				0.0	0.0	0.0			0.0	0.0	0.0	
NH4CL		3.3				0.0	0.0	0.0			0.0	0.0	0.0	
C5CL6		0.0				0.0	0.0	0.0			0.0	0.0	0.0	
DIMETHYLPHTHALATE		0.2				0.0	0.0	0.0			0.0	0.0	0.0	
SODIUM STEARATE		0.2				0.0	0.0	0.0			0.0	0.0	0.0	
C7H6O2		0.0				0.0	0.0	0.0			0.0	0.0	0.0	
GLYCEROL		0.5				0.0	0.0	0.0			0.0	0.0	0.0	
NANO2		6.7				0.0	0.0	0.0			0.0	0.0	0.0	
NANO3		0.7				0.0	0.0	0.0			0.0	0.0	0.0	
SODIUM FORMATE		7.9				0.0	0.0	0.0			0.0	0.0	0.0	
SODIUM ACETATE		7.1				0.0	0.0	0.0			0.0	0.0	0.0	
NACL		40.1				0.0	43.7	43.7			43.7	43.7	43.7	
NAF		0.0				0.0	0.0	0.0			0.0	0.0	0.0	
NAHSO4		0.0				0.0	14.9	14.9			14.9	14.9	14.9	
NA2SO4		45.0				0.0	85.7	85.7			85.7	85.7	85.7	
NAH2PO4		0.0				0.0	0.0	0.0			0.0	0.0	0.0	
HF		0.0				0.0	0.0	0.0			0.0	0.0	0.0	
FE		3.5				0.0	0.0	0.0			0.0	0.0	0.0	
SULFUR		4.4				0.0	0.0	0.0			0.0	0.0	0.0	
FE2O3		0.0				0.0	5.0	5.0			5.0	5.0	5.0	
Total LIQUID lb/hr	0.0	1211.0	0.0	0.0	0.0	6264.7	7396.3	7589.1	0.0	0.0	7589.1	7589.1	7519.7	0.0

Stream Number:	31	32	33	34	35	36	37	38	39	40	41	42
Stream Description:	Recomb. Gas Effluent	Liquid Effluent from LP GLS	Liquid Effluent to BRS	Liquid Effluent to Off-Spec Tank	Off-Spec Effluent to Blend Tanks	Cooling Water Supply	Cooling Water to Reactor Flanges	Cooling Water From Reactor Flanges	Cooling Water Return	Flush Water Supply	Flush Water After Flush Heater	LP Quench Additives
Temperature F	48.1	146.9	146.9			90.0	90.0	106.0	120.0			
Pressure psi	30.0	30.0	30.0			45.0	45.0	45.0	45.0			
Volume Flow cuft/hr	13815.4	125.4	125.4			1166.6	40.2	40.4	1174.3			
Enthalpy Mbtu/hr	-1.522	-50.027	-50.027			-493.742	-17.017	-16.977	-491.572			
Average Mass Flow lb/hr	2282.5	7519.7	7519.7	0.0	0.0	72478.2	2500.0	2500.0	72478.2	0.0	0.0	0.0
Instantaneous Mass Flow lb/hr	2282.5	7519.7	7519.7	0.0	0.0	72478.2	2500.0	2500.0	72478.2	0.0	0.0	0.0
Mass Flow VAPOR lb/hr												
H2O	7.8											
ISOPROPANOL	0.0											
C2H6O2	0.0											
THIODIGLYCOL	0.0											
Q-OH	0.0											
C6H13S2O	0.0											
TRITHIOLANE	0.0											
DITHIANE	0.0											
CL2	0.0											
CO2	379.6											
HCL	0.0											
H2SO4	0.0											
NAOH	0.0											
HCLO	0.0											
O2	109.1											
N2	1785.5											
H2	0.0											
N2O	0.5											
NH4CL	0.0											
C5CL6	0.0											
DIMETHYLPHTHALATE	0.0											
SODIUM STEARATE	0.0											
C7H6O2	0.0											
GLYCEROL	0.0											
NANO2	0.0											
NANO3	0.0											
SODIUM FORMATE	0.0											
SODIUM ACETATE	0.0											
NACL	0.0											
NAF	0.0											
NAHSO4	0.0											
NA2SO4	0.0											
NAH2PO4	0.0											
HF	0.0											
FE	0.0											
SULFUR	0.0											
FE2O3	0.0											
Total VAPOR lb/hr	2282.4	0.0	0.0	0.0	0.0	0.0	0.0	0.0	0.0	0.0	0.0	0.0
Mass Flow LIQUID lb/hr	0.1	7364.3	7364.3			72478.2	2500.0	2500.0	72478.2			
H2O	0.0	0.0	0.0			0.0	0.0	0.0	0.0			
ISOPROPANOL	0.0	0.0	0.0			0.0	0.0	0.0	0.0			
C2H6O2	0.0	0.0	0.0			0.0	0.0	0.0	0.0			
THIODIGLYCOL	0.0	0.0	0.0			0.0	0.0	0.0	0.0			
Q-OH	0.0	0.0	0.0			0.0	0.0	0.0	0.0			
C6H13S2O	0.0	0.0	0.0			0.0	0.0	0.0	0.0			
TRITHIOLANE	0.0	0.0	0.0			0.0	0.0	0.0	0.0			
DITHIANE	0.0	0.0	0.0			0.0	0.0	0.0	0.0			
CL2	0.0	6.0	6.0			0.0	0.0	0.0	0.0			
CO2	0.0	0.0	0.0			0.0	0.0	0.0	0.0			
HCL	0.0	0.0	0.0			0.0	0.0	0.0	0.0			
H2SO4	0.0	0.0	0.0			0.0	0.0	0.0	0.0			
NAOH	0.0	0.0	0.0			0.0	0.0	0.0	0.0			
HCLO	0.0	0.0	0.0			0.0	0.0	0.0	0.0			
O2	0.0	0.1	0.1			0.0	0.0	0.0	0.0			
N2	0.0	0.1	0.1			0.0	0.0	0.0	0.0			
H2	0.0	0.0	0.0			0.0	0.0	0.0	0.0			
N2O	0.0	0.0	0.0			0.0	0.0	0.0	0.0			
NH4CL	0.0	0.0	0.0			0.0	0.0	0.0	0.0			
C5CL6	0.0	0.0	0.0			0.0	0.0	0.0	0.0			
DIMETHYLPHTHALATE	0.0	0.0	0.0			0.0	0.0	0.0	0.0			
SODIUM STEARATE	0.0	0.0	0.0			0.0	0.0	0.0	0.0			
C7H6O2	0.0	0.0	0.0			0.0	0.0	0.0	0.0			
GLYCEROL	0.0	0.0	0.0			0.0	0.0	0.0	0.0			
NANO2	0.0	0.0	0.0			0.0	0.0	0.0	0.0			
NANO3	0.0	0.0	0.0			0.0	0.0	0.0	0.0			
SODIUM FORMATE	0.0	0.0	0.0			0.0	0.0	0.0	0.0			
SODIUM ACETATE	0.0	0.0	0.0			0.0	0.0	0.0	0.0			
NACL	43.7	43.7	43.7			0.0	0.0	0.0	0.0			
NAF	0.0	0.0	0.0			0.0	0.0	0.0	0.0			
NAHSO4	0.0	14.9	14.9			0.0	0.0	0.0	0.0			
NA2SO4	0.0	85.7	85.7			0.0	0.0	0.0	0.0			
NAH2PO4	0.0	0.0	0.0			0.0	0.0	0.0	0.0			
HF	0.0	0.0	0.0			0.0	0.0	0.0	0.0			
FE	0.0	0.0	0.0			0.0	0.0	0.0	0.0			
SULFUR	0.0	0.0	0.0			0.0	0.0	0.0	0.0			
FE2O3	0.0	5.0	5.0			0.0	0.0	0.0	0.0			
Total LIQUID lb/hr	0.1	7519.7	7519.7	0.0	0.0	72478.2	2500.0	2500.0	72478.2	0.0	0.0	0.0

GENERAL NOTES:

1. DATA ARE GIVEN FOR A SINGLE SCWO TRAIN. FIVE SCWO TRAINS ARE PROVIDED.
2. ALL INFORMATION, CALCULATIONS, AND ASSUMPTIONS USED IN THE DETERMINATION OF STREAM DATA MAY BE FOUND IN THE "MASS AND ENERGY BALANCES FOR THE SCWO SYSTEM," CALC. NO. 24915-10-M4-SCWO-00001, REV. 1, JULY 2004.

Blayne Monen
cn=Blayne Monen, o=Issued, ou=Configuration Management, c=US
Signature Valid 2004.07.12 17:11:08 -07'00'

NO.	DATE	DESCRIPTION	DR	CK	DL	PE	APPD
2	7-12-04	IFD, UPDATED CASE 3	JG	SV	KD	NW	DJ
1	6-30-04	IFD, INCORPORATED COMMENTS, ADDED EQUIP SPECS	JG	SV	KD	NW	DJ
0	5-7-04	IFD, UPDATED W/ CURRENT M&EB DATA	JG	SV	KD	NW	DJ

QUALITY ☐ LEVEL 1 ☒ LEVEL 2 ☒ LEVEL 3 ☐ ALL

BECHTEL PARSONS BLUE GRASS
A Joint Venture of Bechtel National, INC. and Parsons Infrastructure & Technology Group Inc.

DOD PROGRAM MANAGER FOR ASSEMBLED CHEMICAL WEAPONS ASSESSMENT EDGEWOOD, MARYLAND

US ARMY ENGINEERING AND SUPPORT CENTER, HUNTSVILLE HUNTSVILLE, ALABAMA

GENERAL ATOMICS

BLUE GRASS CHEMICAL AGENT DESTRUCTION PILOT PLANT PROJECT (BGCAPP)

RICHMOND, KENTUCKY

CONTRACT NO. DAAA09-03-D-0023

SCWO PROCESS FLOW DIAGRAM

DRAWING NUMBER 24915-10-M5-SCWO-00001 | SHEET 5 OF 8 | REV 2

PROFESSIONAL STAMP

bgcapp_d3.dwg

CASE 4: DUNNAGE SLURRY FEED BASE CASE

Stream Number:	1	2	3	4	5	6	7	8	9	10	11	12	13	14	15	16	17	18	19	20	21	22	23	24	25	26	27	28	29	30	31	32	33	34	35	36	37	38	39	40	41	42
Stream Description:	LP Fuel	HP Fuel	LP Agent Hydrolysate	LP Energetics Hydrolysate	LP Feed Additives	LP Blended Hydrolysate	HP Blended Hydrolysate	LP Feed Water	LP Quench Water	HP Feed Water	LP Dunnage from DSH	LP Dunnage to HP Slurry Pump	Process Water to HP Slurry Pump	HP Dunnage/ Water	HP Dunnage/ Water to Preheater	HP Dunnage/ Water After Preheater	Air	Combustor Nozzle Feed	Pre-Quench Reaction Products	Liner Purge Gas	Liner Purge Gas After Heating	HP Quench Water	Quenched Effluent	Cooled Effluent	Gas Effluent from HP GLS	LP Gas Effluent	Liquid Effluent from HP GLS	Liquid Effluent from SLS	LP Liquid Effluent	Gas Effluent from LP GLS	Recomb. Gas Effluent	Liquid Effluent from LP GLS	Liquid Effluent to BRS	Liquid Effluent to Off-Spec Tank	Off-Spec Effluent to Blend Tanks	Cooling Water Supply	Cooling Water to Reactor Flanges	Cooling Water From Reactor Flanges	Cooling Water Return	Flush Water Supply	Flush Water After Flush Heater	LP Quench Additives
Temperature F	70.0	96.7							70.0		70.0	70.0		89.5	89.5	500.0	70.0	315.2	1200.0	70.0	600.0	81.0	340.0	140.0	140.0	45.0	140.0	140.0	146.7	146.7	51.6	146.7	146.7			90.0	90.0	106.0	120.0			
Pressure psi	14.3	3415.0							14.3		14.3	14.3		3415.0	3415.0	3415.0	3415.0	3415.0	3415.0	3415.0	3415.0	3415.0	3415.0	3415.0	3415.0	30.0	3415.0	3415.0	30.0	30.0	30.0	30.0	30.0			45.0	45.0	45.0	45.0			
Volume Flow cuft/hr	2.0	2.0							106.1		17.9	17.9		17.8	17.8	21.2	91.1	162.9	526.9	6.0	12.4	105.2	286.0	230.4	102.1	9556.4	128.3	128.3	583.5	455.6	10058.7	127.8	127.8			899.2	40.2	40.4	905.1			
Enthalpy MMBtu/hr	-0.374	-0.372							-45.157		-5.462	-5.462		-5.439	-5.439	-5.091	-0.027	-5.490	-5.545	-0.002	0.013	-45.023	-50.555	-52.227	-1.047	-1.057	-51.180	-51.180	-51.180	-0.243	-1.301	-50.937	-50.937			-380.551	-17.031	-16.991	-378.879			
Average Mass Flow lb/hr	102.7	102.7	0.0	0.0	0.0	0.0	0.0	0.0	6609.2	0.0	1000.0	1000.0	0.0	1000.0	1000.0	1000.0	1530.3	2633.0	2633.0	100.0	100.0	6609.2	9342.2	9342.2	1592.0	1592.0	7750.3	7750.3	7750.3	77.7	1669.7	7672.6	7672.6	0.0	0.0	55862.5	2500.0	2500.0	55862.5	0.0	0.0	0.0
Instantaneous Mass Flow lb/hr	102.7	102.7	0.0	0.0	0.0	0.0	0.0	0.0	6609.2	0.0	1000.0	1000.0	0.0	1000.0	1000.0	1000.0	1530.3	2633.0	2633.0	100.0	100.0	6609.2	9342.2	9342.2	1592.0	1592.0	7750.3	7750.3	7750.3	77.7	1669.7	7672.6	7672.6	0.0	0.0	55862.5	2500.0	2500.0	55862.5	0.0	0.0	0.0
Mass Flow VAPOR lb/hr																																										
H2O																	0.0	42.5	898.6	0.0	0.0		67.7	2.8	2.8	2.8			4.4	4.4	6.4											
CL2																	0.0	0.0	0.0	0.0	0.0		0.0	0.0	0.0	0.0			0.0	0.0	0.0											
CO2																	0.0	0.0	330.9	0.0	0.0		290.7	267.4	267.4	267.4			57.0	57.0	324.4											
HCL																	0.0	3.1	0.0	0.0	0.0		0.0	0.0	0.0	0.0			0.0	0.0	0.0											
H2SO4																	0.0	0.0	0.0	0.0	0.0		0.0	0.0	0.0	0.0			0.0	0.0	0.0											
NAOH																	0.0	0.0	0.0	0.0	0.0		0.0	0.0	0.0	0.0			0.0	0.0	0.0											
HCLO																	0.0	0.0	0.0	0.0	0.0		0.0	0.0	0.0	0.0			0.0	0.0	0.0											
N2																	1175.3	1173.7	1178.2	76.8	76.8		1241.8	1240.4	1240.4	1240.4			14.6	14.6	1255.0											
O2																	355.0	354.4	59.2	23.2	23.2		81.2	80.7	80.7	80.7			1.6	1.6	82.3											
H2																	0.0	0.0	0.0	0.0	0.0		0.0	0.0	0.0	0.0			0.0	0.0	0.0											
N2O																	0.0	0.0	0.7	0.0	0.0		0.7	0.6	0.6	0.6			0.1	0.1	0.7											
NAHCO3																	0.0	0.0	0.0	0.0	0.0		0.0	0.0	0.0	0.0			0.0	0.0	0.0											
NAHSO4																	0.0	0.0	1.8	0.0	0.0		0.0	0.0	0.0	0.0			0.0	0.0	0.0											
NACL																	0.0	0.0	49.7	0.0	0.0		0.0	0.0	0.0	0.0			0.0	0.0	0.0											
NA2CO3																	0.0	0.0	0.0	0.0	0.0		0.0	0.0	0.0	0.0			0.0	0.0	0.0											
NAGLO																	0.0	0.0	0.0	0.0	0.0		0.0	0.0	0.0	0.0			0.0	0.0	0.0											
K2O																	0.0	0.0	0.0	0.0	0.0		0.0	0.0	0.0	0.0			0.0	0.0	0.0											
K2SO4																	0.0	0.0	0.5	0.0	0.0		0.0	0.0	0.0	0.0			0.0	0.0	0.0											
ISOPROPANOL																	0.0	9.9	0.0	0.0	0.0		0.0	0.0	0.0	0.0			0.0	0.0	0.0											
CARBOXYMETHYLCELLULOSE																	0.0	0.0	0.0	0.0	0.0		0.0	0.0	0.0	0.0			0.0	0.0	0.0											
C14H28																	0.0	0.0	0.0	0.0	0.0		0.0	0.0	0.0	0.0			0.0	0.0	0.0											
NA2SO4																	0.0	0.0	113.5	0.0	0.0		0.0	0.0	0.0	0.0			0.0	0.0	0.0											
NANO2																	0.0	0.0	0.0	0.0	0.0		0.0	0.0	0.0	0.0			0.0	0.0	0.0											
NANO3																	0.0	0.0	0.0	0.0	0.0		0.0	0.0	0.0	0.0			0.0	0.0	0.0											
SODIUM FORMATE																	0.0	0.0	0.0	0.0	0.0		0.0	0.0	0.0	0.0			0.0	0.0	0.0											
SODIUM ACETATE																	0.0	0.0	0.0	0.0	0.0		0.0	0.0	0.0	0.0			0.0	0.0	0.0											
GLYCEROL																	0.0	0.0	0.0	0.0	0.0		0.0	0.0	0.0	0.0			0.0	0.0	0.0											
PLASTIC (CH2)n																	0.0	0.0	0.0	0.0	0.0		0.0	0.0	0.0	0.0			0.0	0.0	0.0											
WOOD ($C_{6.94}H_{10}N_{0.03}O_{4.782}$)																	0.0	0.0	0.0	0.0	0.0		0.0	0.0	0.0	0.0			0.0	0.0	0.0											
Total VAPOR lb/hr	0.0	0.0	0.0	0.0	0.0	0.0	0.0	0.0	0.0	0.0	0.0	0.0	0.0	0.0	0.0	0.0	1530.3	1583.5	2633.0	100.0	100.0	0.0	1682.0	1592.0	1592.0	1592.0	0.0	0.0	77.7	77.7	1668.9	0.0	0.0	0.0	0.0	0.0	0.0	0.0	0.0	0.0	0.0	0.0
Mass Flow LIQUID lb/hr																																										
H2O	30.8	30.8							6609.2		724.3	724.3		724.3	724.3	724.3		712.7				6609.2	7440.2	7505.0			7505.0	7505.0	7500.6		0.8	7500.6	7500.6			55862.5	2500.0	2500.0	55862.5			
CL2	0.0	0.0									0.0	0.0		0.0	0.0	0.0		0.0				0.0	0.0	0.0			0.0	0.0	0.0		0.0	0.0	0.0			0.0	0.0	0.0	0.0			
CO2	0.0	0.0							0.0		0.0	0.0		0.0	0.0	0.0		0.0				0.0	40.2	63.4			63.4	63.4	6.4		0.0	6.4	6.4			0.0	0.0	0.0	0.0			
HCL	0.0	0.0							0.0		6.0	6.0		6.0	6.0	6.0		2.9				0.0	0.0	0.0			0.0	0.0	0.0		0.0	0.0	0.0			0.0	0.0	0.0	0.0			
H2SO4	0.0	0.0							0.0		21.0	21.0		21.0	21.0	21.0		21.0				0.0	0.0	0.0			0.0	0.0	0.0		0.0	0.0	0.0			0.0	0.0	0.0	0.0			
NAOH	0.0	0.0							0.0		0.0	0.0		0.0	0.0	0.0		0.0				0.0	0.0	0.0			0.0	0.0	0.0		0.0	0.0	0.0			0.0	0.0	0.0	0.0			
HCLO	0.0	0.0							0.0		0.0	0.0		0.0	0.0	0.0		0.0				0.0	0.0	0.0			0.0	0.0	0.0		0.0	0.0	0.0			0.0	0.0	0.0	0.0			
N2	0.0	0.0							0.0		0.0	0.0		0.0	0.0	0.0		1.5				0.0	13.2	14.6			14.6	14.6	0.1		0.0	0.1	0.1			0.0	0.0	0.0	0.0			
O2	0.0	0.0							0.0		0.0	0.0		0.0	0.0	0.0		0.7				0.0	1.2	1.6			1.6	1.6	0.0		0.0	0.0	0.0			0.0	0.0	0.0	0.0			
H2	0.0	0.0							0.0		0.0	0.0		0.0	0.0	0.0		0.0				0.0	0.0	0.0			0.0	0.0	0.0		0.0	0.0	0.0			0.0	0.0	0.0	0.0			
N2O	0.0	0.0							0.0		0.0	0.0		0.0	0.0	0.0		0.0				0.0	0.0	0.1			0.1	0.1	0.0		0.0	0.0	0.0			0.0	0.0	0.0	0.0			
NAHCO3	0.0	0.0							0.0		0.0	0.0		0.0	0.0	0.0		0.0				0.0	0.0	0.0			0.0	0.0	0.0		0.0	0.0	0.0			0.0	0.0	0.0	0.0			
NAHSO4	0.0	0.0							0.0		0.0	0.0		0.0	0.0	0.0		0.8				0.0	1.8	1.8			1.8	1.8	1.8		0.0	1.8	1.8			0.0	0.0	0.0	0.0			
NACL	0.0	0.0							0.0		39.5	39.5		39.5	39.5	39.5		39.5				0.0	49.7	49.7			49.7	49.7	49.7		0.0	49.7	49.7			0.0	0.0	0.0	0.0			
NA2CO3	0.0	0.0							0.0		0.0	0.0		0.0	0.0	0.0		0.0				0.0	0.0	0.0			0.0	0.0	0.0		0.0	0.0	0.0			0.0	0.0	0.0	0.0			
NAGLO	0.0	0.0							0.0		0.8	0.8		0.8	0.8	0.8		0.8				0.0	0.0	0.0			0.0	0.0	0.0		0.0	0.0	0.0			0.0	0.0	0.0	0.0			
K2O	0.0	0.0							0.0		0.3	0.3		0.3	0.3	0.3		0.3				0.0	0.0	0.0			0.0	0.0	0.0		0.0	0.0	0.0			0.0	0.0	0.0	0.0			
K2SO4	0.0	0.0							0.0		0.0	0.0		0.0	0.0	0.0		0.0				0.0	0.5	0.5			0.5	0.5	0.5		0.0	0.5	0.5			0.0	0.0	0.0	0.0			
ISOPROPANOL	71.9	71.9							0.0		0.0	0.0		0.0	0.0	0.0		62.0				0.0	0.0	0.0			0.0	0.0	0.0		0.0	0.0	0.0			0.0	0.0	0.0	0.0			
CARBOXYMETHYLCELLULOSE	0.0	0.0							0.0		7.2	7.2		7.2	7.2	7.2		7.2				0.0	0.0	0.0			0.0	0.0	0.0		0.0	0.0	0.0			0.0	0.0	0.0	0.0			
C14H28	0.0	0.0							0.0		3.6	3.6		3.6	3.6	3.6		3.5				0.0	0.0	0.0			0.0	0.0	0.0		0.0	0.0	0.0			0.0	0.0	0.0	0.0			
NA2SO4	0.0	0.0							0.0		85.7	85.7		85.7	85.7	85.7		85.7				0.0	113.5	113.5			113.5	113.5	113.5		0.0	113.5	113.5			0.0	0.0	0.0	0.0			
NANO2	0.0	0.0							0.0		11.1	11.1		11.1	11.1	11.1		11.1				0.0	0.0	0.0			0.0	0.0	0.0		0.0	0.0	0.0			0.0	0.0	0.0	0.0			
NANO3	0.0	0.0							0.0		6.0	6.0		6.0	6.0	6.0		6.0				0.0	0.0	0.0			0.0	0.0	0.0		0.0	0.0	0.0			0.0	0.0	0.0	0.0			
SODIUM FORMATE	0.0	0.0							0.0		11.6	11.6		11.6	11.6	11.6		11.6				0.0	0.0	0.0			0.0	0.0	0.0		0.0	0.0	0.0			0.0	0.0	0.0	0.0			
SODIUM ACETATE	0.0	0.0							0.0		12.0	12.0		12.0	12.0	12.0		12.0				0.0	0.0	0.0			0.0	0.0	0.0		0.0	0.0	0.0			0.0	0.0	0.0	0.0			
GLYCEROL	0.0	0.0							0.0		0.9	0.9		0.9	0.9	0.9		0.9				0.0	0.0	0.0			0.0	0.0	0.0		0.0	0.0	0.0			0.0	0.0	0.0	0.0			
PLASTIC (CH2)n	0.0	0.0							0.0		1.4	1.4		1.4	1.4	1.4		1.4				0.0	0.0	0.0			0.0	0.0	0.0		0.0	0.0	0.0			0.0	0.0	0.0	0.0			
WOOD ($C_{6.94}H_{10}N_{0.03}O_{4.782}$)	0.0	0.0							0.0		68.8	68.8		68.8	68.8	68.8		68.8				0.0	0.0	0.0			0.0	0.0	0.0		0.0	0.0	0.0			0.0	0.0	0.0	0.0			
Total LIQUID lb/hr	102.7	102.7	0.0	0.0	0.0	0.0	0.0	0.0	6609.2	0.0	1000.0	1000.0	0.0	1000.0	1000.0	1000.0	0.0	1049.5	0.0	0.0	0.0	6609.2	7660.2	7750.3	0.0	0.0	7750.3	7750.3	7672.6	0.0	0.8	7672.6	7672.6	0.0	0.0	55862.5	2500.0	2500.0	55862.5	0.0	0.0	0.0
*** LIQUID PHASE ***																																										
Density lb/gal	7.0	6.9							8.3		7.5	7.5		7.5	7.5	6.3		6.9				8.4	7.4	8.1			8.1	8.1	8.0		8.3	8.0	8.0			8.3	8.3	8.3	8.3			

GENERAL NOTES:

1. DATA ARE GIVEN FOR A SINGLE SCWO TRAIN. FIVE SCWO TRAINS ARE PROVIDED.
2. ALL INFORMATION, CALCULATIONS, AND ASSUMPTIONS USED IN THE DETERMINATION OF STREAM DATA MAY BE FOUND IN THE "MASS AND ENERGY BALANCES FOR THE SCWO SYSTEM," CALC. NO. 24915-10-M4-SCWO-00001, REV. 1, JULY 2004. 5 2

Signature Valid
Blayne Monen
cn=Blayne Monen, o=Issued, ou=Configuration Management, c=US
2004.07.12 17:11:22 -07'00'

NO.	DATE	DESCRIPTION	DR	CK	DL	PE	APPD
2	7-12-04	IFD, UPDATED CASE 3	JG	SV	KD	NW	DJ
1	6-30-04	IFD, INCORPORATED COMMENTS, ADDED EQUIP SPECS	JG	SV	KD	NW	DJ
0	5-7-04	IFD, UPDATED W/ CURRENT M&EB DATA	JG	SV	KD	NW	DJ

QUALITY ☐ LEVEL 1 ☒ LEVEL 2 ☒ LEVEL 3 ☐ ALL

BECHTEL PARSONS BLUE GRASS
A Joint Venture of Bechtel Nations, INC. and Parsons Infrastructure & Technology Group Inc.

DOD PROGRAM MANAGER FOR ASSEMBLED CHEMICAL WEAPONS ASSESSMENT EDGEWOOD, MARYLAND

US ARMY ENGINEERING AND SUPPORT CENTER, HUNTSVILLE HUNTSVILLE, ALABAMA

GENERAL ATOMICS

BLUE GRASS CHEMICAL AGENT DESTRUCTION PILOT PLANT PROJECT (BGCAPP)
RICHMOND, KENTUCKY

CONTRACT NO. DAAA09-03-D-0023

SCWO
PROCESS FLOW DIAGRAM

PROFESSIONAL STAMP

DRAWING NUMBER 24915-10-M5-SCWO-00001 | SHEET 6 OF 8 | REV 2

bgcapp_d3.dwg

CASE 5: CARBON SLURRY FEED BASE CASE

Stream Number:	1	2	3	4	5	6	7	8	9	10	11	12	13	14	15	16
Stream Description:	LP Fuel	HP Fuel	LP Agent Hydrolysate	LP Energetics Hydrolysate	LP Feed Additives	LP Blended Hydrolysate	HP Blended Hydrolysate	LP Feed Water	LP Quench Water	HP Feed Water	LP Carbon from DSH	LP Carbon to HP Slurry Pump	Process Water to HP Slurry Pump	HP Carbon/ Water	HP Carbon/ Water to Preheater	HP Carbon/ Water After Preheater
Temperature F	70.0	96.7						70.0	70.0	81.0	70.0	70.0		118.1	90.9	90.9
Pressure psi	14.3	3415.0						14.3	14.3	3415.0	14.3	14.3		3415.0	3415.0	3415.0
Volume Flow cuft/hr	3.1	3.2						8.0	68.0	8.0	8.1	8.1		8.1	16.0	16.0
Enthalpy MMBtu/hr	-0.593	-0.589						-3.416	-28.931	-3.406	-1.264	-1.264		-1.254	-4.660	-4.660
Average Mass Flow lb/hr	162.7	162.7	0.0	0.0	0.0	0.0	0.0	500.0	4234.4	500.0	200.0	200.0	0.0	200.0	700.0	700.0
Instantaneous Mass Flow lb/hr	162.7	162.7	0.0	0.0	0.0	0.0	0.0	500.0	4234.4	500.0	200.0	200.0	0.0	200.0	700.0	700.0
Mass Flow VAPOR lb/hr																
H2O																
CO2																
N2																
O2																
N2O																
NAHCO3																
NACL																
NACLO																
ISOPROPANOL																
CARBON																
CARBOXYMETHYLCELLULOSE																
Total VAPOR lb/hr	0.0	0.0	0.0	0.0	0.0	0.0	0.0	0.0	0.0	0.0	0.0	0.0	0.0	0.0	0.0	0.0
Mass Flow LIQUID lb/hr																
H2O	48.8	48.8						500.0	4234.4	500.0	174.5	174.5		174.5	674.5	674.5
CO2	0.0	0.0						0.0	0.0	0.0	0.0	0.0		0.0	0.0	0.0
N2	0.0	0.0						0.0	0.0	0.0	0.0	0.0		0.0	0.0	0.0
O2	0.0	0.0						0.0	0.0	0.0	0.0	0.0		0.0	0.0	0.0
N2O	0.0	0.0						0.0	0.0	0.0	0.0	0.0		0.0	0.0	0.0
NAHCO3	0.0	0.0						0.0	0.0	0.0	0.0	0.0		0.0	0.0	0.0
NACL	0.0	0.0						0.0	0.0	0.0	0.0	0.0		0.0	0.0	0.0
NACLO	0.0	0.0						0.0	0.0	0.0	4.0	4.0		4.0	4.0	4.0
ISOPROPANOL	113.9	113.9						0.0	0.0	0.0	0.0	0.0		0.0	0.0	0.0
CARBON	0.0	0.0						0.0	0.0	0.0	20.0	20.0		20.0	20.0	20.0
CARBOXYMETHYLCELLULOSE	0.0	0.0						0.0	0.0	0.0	1.5	1.5		1.5	1.5	1.5
Total LIQUID lb/hr	162.7	162.7	0.0	0.0	0.0	0.0	0.0	500.0	4234.4	500.0	200.0	200.0	0.0	200.0	700.0	700.0
*** LIQUID PHASE ***																
Density lb/gal	7.0	6.9						8.3	8.3	8.4	3.3	3.3		3.3	5.8	5.8

Stream Number:	17	18	19	20	21	22	23	24	25	26	27	28	29	30	31	32
Stream Description:	Air	Combined Nozzle Feed	Pre-Quench Reaction Products	Liner Purge Gas	Liner Purge Gas After Heating	HP Quench Water	Quenched Effluent	Cooled Effluent	Gas Effluent from HP GLS	LP Gas Effluent	Liquid Effluent from HP GLS	Liquid Effluent from SLS	LP Liquid Effluent	Gas Effluent from LP GLS	Recomb. Gas Effluent	Liquid Effluent from LP GLS
Temperature F	70.0	82.8	1250.0	70.0	600.0	81.0	400.0	140.0	140.0	45.0	140.0	140.0	146.8	146.8	47.8	146.8
Pressure psi	3415.0	3415.0	3415.0	3415.0	3415.0	3415.0	3415.0	3415.0	3415.0	30.0	3415.0	3415.0	30.0	30.0	30.0	30.0
Volume Flow cuft/hr	100.6	128.3	560.0	6.0	12.4	67.4	275.1	195.5	112.0	10469.8	83.5	83.5	384.7	301.4	10779.9	83.3
Enthalpy MMBtu/hr	-0.030	-5.280	-5.256	-0.002	0.013	-28.845	-34.088	-35.677	-1.113	-1.124	-34.565	-34.565	-34.565	-0.160	-1.284	-34.405
Average Mass Flow lb/hr	1691.4	2554.2	2554.2	100.0	100.0	4234.4	6888.6	6888.6	1740.5	1740.5	5148.1	5148.1	5148.1	51.2	1791.7	5096.9
Instantaneous Mass Flow lb/hr	1691.4	2554.2	2554.2	100.0	100.0	4234.4	6888.6	6888.6	1740.5	1740.5	5148.1	5148.1	5148.1	51.2	1791.7	5096.9
Mass Flow VAPOR lb/hr																
H2O	0.0	0.7	860.6	0.0	0.0		151.7	3.1	3.1	3.1			2.9	2.9	6.0	
CO2	0.0	0.0	325.6	0.0	0.0		301.7	284.0	284.0	284.0			37.3	37.3	321.3	
N2	1299.0	1296.7	1299.0	76.8	76.8		1367.9	1365.9	1365.9	1365.9			9.9	9.9	1375.8	
O2	392.4	391.1	65.4	23.2	23.2		87.9	87.5	87.5	87.5			1.1	1.1	88.5	
N2O	0.0	0.0	0.0	0.0	0.0		0.0	0.0	0.0	0.0			0.0	0.0	0.0	
NAHCO3	0.0	0.0	0.4	0.0	0.0		0.0	0.0	0.0	0.0			0.0	0.0	0.0	
NACL	0.0	0.0	3.2	0.0	0.0		0.0	0.0	0.0	0.0			0.0	0.0	0.0	
NACLO	0.0	0.0	0.0	0.0	0.0		0.0	0.0	0.0	0.0			0.0	0.0	0.0	
ISOPROPANOL	0.0	0.5	0.0	0.0	0.0		0.0	0.0	0.0	0.0			0.0	0.0	0.0	
CARBON	0.0	0.0	0.0	0.0	0.0		0.0	0.0	0.0	0.0			0.0	0.0	0.0	
CARBOXYMETHYLCELLULOSE	0.0	0.0	0.0	0.0	0.0		0.0	0.0	0.0	0.0			0.0	0.0	0.0	
Total VAPOR lb/hr	1691.4	1689.0	2554.2	100.0	100.0	0.0	1909.2	1740.5	1740.5	1740.5	0.0	0.0	51.2	51.2	1791.6	0.0
Mass Flow LIQUID lb/hr																
H2O		722.6				4234.4	4943.3	5091.9			5091.9	5091.9	5089.0		0.0	5089.0
CO2		0.0				0.0	23.9	41.6			41.6	41.6	4.3		0.0	4.3
N2		2.3				0.0	7.9	9.9			9.9	9.9	0.0		0.0	0.0
O2		1.3				0.0	0.7	1.1			1.1	1.1	0.0		0.0	0.0
N2O		0.0				0.0	0.0	0.0			0.0	0.0	0.0		0.0	0.0
NAHCO3		0.0				0.0	0.4	0.4			0.4	0.4	0.4		0.0	0.4
NACL		0.0				0.0	3.2	3.2			3.2	3.2	3.2		0.0	3.2
NACLO		4.0				0.0	0.0	0.0			0.0	0.0	0.0		0.0	0.0
ISOPROPANOL		113.4				0.0	0.0	0.0			0.0	0.0	0.0		0.0	0.0
CARBON		20.0				0.0	0.0	0.0			0.0	0.0	0.0		0.0	0.0
CARBOXYMETHYLCELLULOSE		1.5				0.0	0.0	0.0			0.0	0.0	0.0		0.0	0.0
Total LIQUID lb/hr	0.0	865.1	0.0	0.0	0.0	4234.4	4979.4	5148.1	0.0	0.0	5148.1	5148.1	5096.9	0.0	0.0	5096.9
*** LIQUID PHASE ***																
Density lb/gal		4.6				8.4	7.2	8.2			8.2	8.2	8.2		8.3	8.2

Stream Number:	33	34	35	36	37	38	39	40	41	42
Stream Description:	Liquid Effluent to BRS	Liquid Effluent to Off-Spec Tank	Off-Spec Effluent to Blend Tanks	Cooling Water Supply	Cooling Water to Reactor Flanges	Cooling Water From Reactor Flanges	Cooling Water Return	Flush Water Supply	Flush Water After Flush Heater	LP Quench Additives
Temperature F	146.8			90.0	90.0	106.0	120.0			
Pressure psi	30.0			45.0	45.0	45.0	45.0			
Volume Flow cuft/hr	83.3			854.5	40.2	40.4	860.1			
Enthalpy MMBtu/hr	-34.405			-361.650	-17.031	-16.991	-360.061			
Average Mass Flow lb/hr	5096.9	0.0	0.0	53088.0	2500.0	2500.0	53088.0	0.0	0.0	0.0
Instantaneous Mass Flow lb/hr	5096.9	0.0	0.0	53088.0	2500.0	2500.0	53088.0	0.0	0.0	0.0
Mass Flow VAPOR lb/hr										
H2O										
CO2										
N2										
O2										
N2O										
NAHCO3										
NACL										
NACLO										
ISOPROPANOL										
CARBON										
CARBOXYMETHYLCELLULOSE										
Total VAPOR lb/hr	0.0	0.0	0.0	0.0	0.0	0.0	0.0	0.0	0.0	0.0
Mass Flow LIQUID lb/hr										
H2O	5089.0			53088.0	2500.0	2500.0	53088.0			
CO2	4.3			0.0	0.0	0.0	0.0			
N2	0.0			0.0	0.0	0.0	0.0			
O2	0.0			0.0	0.0	0.0	0.0			
N2O	0.0			0.0	0.0	0.0	0.0			
NAHCO3	0.4			0.0	0.0	0.0	0.0			
NACL	3.2			0.0	0.0	0.0	0.0			
NACLO	0.0			0.0	0.0	0.0	0.0			
ISOPROPANOL	0.0			0.0	0.0	0.0	0.0			
CARBON	0.0			0.0	0.0	0.0	0.0			
CARBOXYMETHYLCELLULOSE	0.0			0.0	0.0	0.0	0.0			
Total LIQUID lb/hr	5096.9	0.0	0.0	53088.0	2500.0	2500.0	53088.0	0.0	0.0	0.0
*** LIQUID PHASE ***										
Density lb/gal	8.2			8.3	8.3	8.3	8.3			

GENERAL NOTES:

1. DATA ARE GIVEN FOR A SINGLE SCWO TRAIN. FIVE SCWO TRAINS ARE PROVIDED.
2. ALL INFORMATION, CALCULATIONS, AND ASSUMPTIONS USED IN THE DETERMINATION OF STREAM DATA MAY BE FOUND IN THE "MASS AND ENERGY BALANCES FOR THE SCWO SYSTEM," CALC. NO. 24915-10-M4-SCWO-00001, REV. 1, JULY 2004. (6, 2)

Blayne Monen
cn=Blayne Monen, o=Issued, ou=Configuration Management, c=US
Signature Valid 2004.07.12 17:11:34 -07'00'

NO.	DATE	DESCRIPTION	DR	CK	DL	PE	APPD
2	7-12-04	IFD, UPDATED CASE 3	JG	SV	KD	NW	DJ
1	6-30-04	IFD, INCORPORATED COMMENTS, ADDED EQUIP SPECS	JG	SV	KD	NW	DJ
0	5-7-04	IFD, UPDATED W/ CURRENT M&EB DATA	JG	SV	KD	NW	DJ

QUALITY ☐ LEVEL 1 ☒ LEVEL 2 ☒ LEVEL 3 ☐ ALL

BECHTEL PARSONS BLUE GRASS
A Joint Venture of Bechtel National, INC. and Parsons Infrastructure & Technology Group Inc.

DOD PROGRAM MANAGER FOR ASSEMBLED CHEMICAL WEAPONS ASSESSMENT EDGEWOOD, MARYLAND

US ARMY ENGINEERING AND SUPPORT CENTER, HUNTSVILLE HUNTSVILLE, ALABAMA

GENERAL ATOMICS

BLUE GRASS CHEMICAL AGENT DESTRUCTION PILOT PLANT PROJECT (BGCAPP)
RICHMOND, KENTUCKY

CONTRACT NO. DAAA09-03-D-0023

SCWO
PROCESS FLOW DIAGRAM

DRAWING NUMBER 24915-10-M5-SCWO-00001 | SHEET 7 OF 8 | REV 2

PROFESSIONAL STAMP

bgcapp_d3.dwg

CASE 6: PRE-IGNITION CASE

Stream Number:	1	2	3	4	5	6	7	8	9	10	11	12	13	14	15	16	17	18	19	20	21	22	23	24	25	26	27	28	29	30	31	32	33	34	35	36	37	38	39	40	41	42
Stream Description:	LP Fuel	HP Fuel	LP Agent Hydrolysate	LP Energetics Hydrolysate	LP Feed Additives	LP Blended Hydrolysate	HP Blended Hydrolysate	LP Feed Water	LP Quench Water	HP Feed Water	LP Dunnage from DSH	LP Dunnage to HP Slurry Pump	Process Water to HP Slurry Pump	HP Dunnage/ Water	HP Dunnage/ Water to Preheater	HP Dunnage/ Water After Preheater	Air	Combined Nozzle Feed	Pre-Quench Reaction Products	Liner Purge Gas	Liner Purge Gas After Heating	HP Quench Water	Quenched Effluent	Cooled Effluent	Gas Effluent from HP GLS	LP Gas Effluent	Liquid Effluent from HP GLS	Liquid Effluent from SLS	LP Liquid Effluent	Gas Effluent from LP GLS	Recomb. Gas Effluent	Liquid Effluent from LP GLS	Liquid Effluent to BRS	Liquid Effluent to Off-Spec Tank	Off-Spec Effluent to Blend Tanks	Cooling Water Supply	Cooling Water to Reactor Flanges	Cooling Water From Reactor Flanges	Cooling Water Return	Flush Water Supply	Flush Water After Flush Heater	LP Quench Additives
Temperature F								70.0	70.0	81.0					81.0	1000.0	70.0	834.5	792.6	70.0	600.0	81.0	500.0	140.0	140.0	45.0	140.0	140.0	148.2	148.2	46.7	148.2	148.2			90.0	90.0	98.0	120.0			
Pressure psi								14.3	14.3	3415.0					3415.0	3415.0	3415.0	3415.0	3415.0	3415.0	3415.0	3415.0	3415.0	3415.0	3415.0	30.0	3415.0	3415.0	30.0	30.0	30.0	30.0	30.0			45.0	45.0	45.0	45.0			
Volume Flow cuft/hr								16.0	28.5	15.9					15.9	205.1	25.4	238.9	224.9	5.9	12.4	28.2	127.6	80.8	35.7	3254.3	45.1	45.1	111.0	65.7	3320.2	45.3	45.3			634.3	40.2	40.3	638.5			
Enthalpy MMBtu/hr								-6.828	-12.117	-6.808					-6.808	-5.437	-0.008	-5.444	-5.479	-0.002	0.013	-12.081	-17.547	-18.725	-0.003	-0.009	-18.722	-18.722	-18.722	-0.004	-0.013	-18.718	-18.718			-268.289	-17.020	-17.000	-267.111			
Average Mass Flow lb/hr	0.0	0.0	0.0	0.0	0.0	0.0	0.0	1000.0	1774.6	1000.0	0.0	0.0	0.0	0.0	1000.0	1000.0	427.1	1427.1	1427.1	100.0	100.0	1774.6	3301.7	3301.7	520.1	520.1	2781.6	2781.6	2781.6	8.4	528.5	2773.1	2773.1	0.0	0.0	39408.3	2500.0	2500.0	39408.3	0.0	0.0	0.0
Instantaneous Mass Flow lb/hr	0.0	0.0	0.0	0.0	0.0	0.0	0.0	1000.0	1774.6	1000.0	0.0	0.0	0.0	0.0	1000.0	1000.0	427.1	1427.1	1427.1	100.0	100.0	1774.6	3301.7	3301.7	520.1	520.1	2781.6	2781.6	2781.6	8.4	528.5	2773.1	2773.1	0.0	0.0	39408.3	2500.0	2500.0	39408.3	0.0	0.0	0.0
Mass Flow VAPOR lb/hr																																										
H2O																1000.0	0.0	1000.0	1000.0	0.0	0.0		139.4	0.9	0.9	0.9			0.7	0.7	1.5											
ISOPROPANOL																0.0	0.0	0.0	0.0	0.0	0.0		0.0	0.0	0.0	0.0			0.0	0.0	0.0											
CO2																0.0	0.0	0.0	0.0	0.0	0.0		0.0	0.0	0.0	0.0			0.0	0.0	0.0											
N2																0.0	328.2	328.2	328.2	76.8	76.8		401.6	399.8	399.8	399.8			5.2	5.2	405.0											
O2																0.0	98.9	98.9	98.9	23.2	23.2		120.9	119.4	119.4	119.4			2.6	2.6	122.1											
Total VAPOR lb/hr	0.0	0.0	0.0	0.0	0.0	0.0	0.0	0.0	0.0	0.0	0.0	0.0	0.0	0.0	0.0	1000.0	427.1	1427.1	1427.1	100.0	100.0	0.0	661.9	520.1	520.1	520.1	0.0	0.0	8.4	8.4	528.5	0.0	0.0	0.0	0.0	0.0	0.0	0.0	0.0	0.0	0.0	0.0
Mass Flow LIQUID lb/hr																																										
H2O								1000.0	1774.6	1000.0					1000.0							1774.6	2635.2	2773.7			2773.7	2773.7	2773.1			2773.1	2773.1			39408.3	2500.0	2500.0	39408.3			
ISOPROPANOL								0.0	0.0	0.0					0.0							0.0	0.0	0.0			0.0	0.0	0.0			0.0	0.0			0.0	0.0	0.0	0.0			
CO2								0.0	0.0	0.0					0.0							0.0	0.0	0.0			0.0	0.0	0.0			0.0	0.0			0.0	0.0	0.0	0.0			
N2								0.0	0.0	0.0					0.0							0.0	3.4	5.2			5.2	5.2	0.0			0.0	0.0			0.0	0.0	0.0	0.0			
O2								0.0	0.0	0.0					0.0							0.0	1.2	2.7			2.7	2.7	0.0			0.0	0.0			0.0	0.0	0.0	0.0			
Total LIQUID lb/hr	0.0	0.0	0.0	0.0	0.0	0.0	0.0	1000.0	1774.6	1000.0	0.0	0.0	0.0	0.0	1000.0	0.0	0.0	0.0	0.0	0.0	0.0	1774.6	2639.7	2781.6	0.0	0.0	2781.6	2781.6	2773.1	0.0	0.0	2773.1	2773.1	0.0	0.0	39408.3	2500.0	2500.0	39408.3	0.0	0.0	0.0
*** LIQUID PHASE ***																																										
Density lb/gal								8.3	8.3	8.4					8.4							8.4	6.7	8.2			8.2	8.2	8.2			8.2	8.2			8.3	8.3	8.3	8.3			

GENERAL NOTES:

1. DATA ARE GIVEN FOR A SINGLE SCWO TRAIN. FIVE SCWO TRAINS ARE PROVIDED.
2. ALL INFORMATION, CALCULATIONS, AND ASSUMPTIONS USED IN THE DETERMINATION OF STREAM DATA MAY BE FOUND IN THE "MASS AND ENERGY BALANCES FOR THE SCWO SYSTEM," CALC. NO. 24915-10-M4-SCWO-00001, REV. 1, JULY 2004. 7 2

CASE 7: IGNITION CASE

Stream Number:	1	2	3	4	5	6	7	8	9	10	11	12	13	14	15	16	17	18	19	20	21	22	23	24	25	26	27	28	29	30	31	32	33	34	35	36	37	38	39	40	41	42
Stream Description:	LP Fuel	HP Fuel	LP Agent Hydrolysate	LP Energetics Hydrolysate	LP Feed Additives	LP Blended Hydrolysate	HP Blended Hydrolysate	LP Feed Water	LP Quench Water	HP Feed Water	LP Dunnage from DSH	LP Dunnage to HP Slurry Pump	Process Water to HP Slurry Pump	HP Dunnage/ Water	HP Dunnage/ Water to Preheater	HP Dunnage/ Water After Preheater	Air	Combined Nozzle Feed	Pre-Quench Reaction Products	Liner Purge Gas	Liner Purge Gas After Heating	HP Quench Water	Quenched Effluent	Cooled Effluent	Gas Effluent from HP GLS	LP Gas Effluent	Liquid Effluent from HP GLS	Liquid Effluent from SLS	LP Liquid Effluent	Gas Effluent from LP GLS	Recomb. Gas Effluent	Liquid Effluent from LP GLS	Liquid Effluent to BRS	Liquid Effluent to Off-Spec Tank	Off-Spec Effluent to Blend Tanks	Cooling Water Supply	Cooling Water to Reactor Flanges	Cooling Water From Reactor Flanges	Cooling Water Return	Flush Water Supply	Flush Water After Flush Heater	LP Quench Additives
Temperature F	70.0	96.9						70.0	70.0	81.0					81.0	1000.0	70.0	796.3	1200.0	70.0	600.0	81.0	500.0	140.0	140.0	45.0	140.0	140.0	147.4	147.4	52.2	147.4	147.4			90.0	90.0	106.1	120.0			
Pressure psi	14.3	3415.0						14.3	14.3	3415.0					3415.0	3415.0	3415.0	3415.0	3415.0	3415.0	3415.0	3415.0	3415.0	3415.0	3415.0	30.0	3415.0	3415.0	30.0	30.0	30.0	30.0	30.0			45.0	45.0	45.0	45.0			
Volume Flow cuft/hr	0.7	0.8						16.0	42.0	15.9					15.9	205.1	25.5	229.4	351.9	5.9	12.4	41.6	141.7	93.2	33.2	3060.5	60.0	60.0	217.0	157.2	3234.0	59.8	59.8			811.5	40.2	40.4	816.9			
Enthalpy MMBtu/hr	-0.144	-0.143						-6.828	-17.855	-6.808					-6.808	-5.437	-0.008	-5.587	-5.642	-0.002	0.013	-17.802	-23.431	-24.938	-0.174	-0.178	-24.765	-24.765	-24.765	-0.064	-0.242	-24.701	-24.701			-343.239	-17.020	-16.980	-341.732			
Average Mass Flow lb/hr	39.5	39.5	0.0	0.0	0.0	0.0	0.0	1000.0	2615.0	1000.0	0.0	0.0	0.0	0.0	1000.0	1000.0	428.5	1468.0	1468.0	100.0	100.0	2615.0	4183.0	4183.0	498.1	498.1	3684.9	3684.9	3684.9	25.0	523.0	3659.9	3659.9	0.0	0.0	50417.5	2500.0	2500.0	50417.5	0.0	0.0	0.0
Instantaneous Mass Flow lb/hr	39.5	39.5	0.0	0.0	0.0	0.0	0.0	1000.0	2615.0	1000.0	0.0	0.0	0.0	0.0	1000.0	1000.0	428.5	1468.0	1468.0	100.0	100.0	2615.0	4183.0	4183.0	498.1	498.1	3684.9	3684.9	3684.9	25.0	523.0	3659.9	3659.9	0.0	0.0	50417.5	2500.0	2500.0	50417.5	0.0	0.0	0.0
Mass Flow VAPOR lb/hr																																										
H2O																1000.0	0.0	1011.9	1045.0	0.0	0.0		134.9	0.9	0.9	0.9			1.5	1.5	2.1											
ISOPROPANOL																0.0	0.0	27.7	0.0	0.0	0.0		0.0	0.0	0.0	0.0			0.0	0.0	0.0											
CO2																0.0	0.0	0.0	60.8	0.0	0.0		50.6	44.0	44.0	44.0			14.5	14.5	58.5											
N2																0.0	329.1	329.1	329.1	76.8	76.8		401.1	398.6	398.6	398.6			7.3	7.3	405.8											
O2																0.0	99.4	99.4	33.1	23.2	23.2		55.6	54.6	54.6	54.6			1.7	1.7	56.3											
Total VAPOR lb/hr	0.0	0.0	0.0	0.0	0.0	0.0	0.0	0.0	0.0	0.0	0.0	0.0	0.0	0.0	0.0	1000.0	428.5	1468.0	1468.0	100.0	100.0	0.0	642.1	498.1	498.1	498.1	0.0	0.0	25.0	25.0	522.7	0.0	0.0	0.0	0.0	0.0	0.0	0.0	0.0	0.0	0.0	0.0
Mass Flow LIQUID lb/hr																																										
H2O	11.9	11.9						1000.0	2615.0	1000.0					1000.0							2615.0	3525.1	3659.2			3659.2	3659.2	3657.6		0.3	3657.6	3657.6			50417.5	2500.0	2500.0	50417.5			
ISOPROPANOL	27.7	27.7						0.0	0.0	0.0					0.0							0.0	0.0	0.0			0.0	0.0	0.0		0.0	0.0	0.0			0.0	0.0	0.0	0.0			
CO2	0.0	0.0						0.0	0.0	0.0					0.0							0.0	10.2	16.7			16.7	16.7	2.3		0.0	2.3	2.3			0.0	0.0	0.0	0.0			
N2	0.0	0.0						0.0	0.0	0.0					0.0							0.0	4.8	7.3			7.3	7.3	0.0		0.0	0.0	0.0			0.0	0.0	0.0	0.0			
O2	0.0	0.0						0.0	0.0	0.0					0.0							0.0	0.8	1.7			1.7	1.7	0.0		0.0	0.0	0.0			0.0	0.0	0.0	0.0			
Total LIQUID lb/hr	39.5	39.5	0.0	0.0	0.0	0.0	0.0	1000.0	2615.0	1000.0	0.0	0.0	0.0	0.0	1000.0	0.0	0.0	0.0	0.0	0.0	0.0	2615.0	3540.9	3684.9	0.0	0.0	3684.9	3684.9	3659.9	0.0	0.3	3659.9	3659.9	0.0	0.0	50417.5	2500.0	2500.0	50417.5	0.0	0.0	0.0
*** LIQUID PHASE ***																																										
Density lb/gal	7.1	7.0						8.3	8.3	8.4					8.4							8.4	6.7	8.2			8.2	8.2	8.2		8.3	8.2	8.2			8.3	8.3	8.3	8.3			

CASE 8: IDLE CASE

Stream Number:	1	2	3	4	5	6	7	8	9	10	11	12	13	14	15	16	17	18	19	20	21	22	23	24	25	26	27	28	29	30	31	32	33	34	35	36	37	38	39	40	41	42
Stream Description:	LP Fuel	HP Fuel	LP Agent Hydrolysate	LP Energetics Hydrolysate	LP Feed Additives	LP Blended Hydrolysate	HP Blended Hydrolysate	LP Feed Water	LP Quench Water	HP Feed Water	LP Dunnage from DSH	LP Dunnage to HP Slurry Pump	Process Water to HP Slurry Pump	HP Dunnage/ Water	HP Dunnage/ Water to Preheater	HP Dunnage/ Water After Preheater	Air	Combined Nozzle Feed	Pre-Quench Reaction Products	Liner Purge Gas	Liner Purge Gas After Heating	HP Quench Water	Quenched Effluent	Cooled Effluent	Gas Effluent from HP GLS	LP Gas Effluent	Liquid Effluent from HP GLS	Liquid Effluent from SLS	LP Liquid Effluent	Gas Effluent from LP GLS	Recomb. Gas Effluent	Liquid Effluent from LP GLS	Liquid Effluent to BRS	Liquid Effluent to Off-Spec Tank	Off-Spec Effluent to Blend Tanks	Cooling Water Supply	Cooling Water to Reactor Flanges	Cooling Water From Reactor Flanges	Cooling Water Return	Flush Water Supply	Flush Water After Flush Heater	LP Quench Additives
Temperature F	70.0	96.9						70.0	70.0	81.0					81.0	81.0	70.0	77.2	1200.0	70.0	600.0	81.0	500.0	140.0	140.0	45.0	140.0	140.0	147.0	147.0	46.2	147.0	147.0			90.0	90.0	106.1	120.0			
Pressure psi	14.3	3415.0						14.3	14.3	3415.0					3415.0	3415.0	3415.0	3415.0	3415.0	3415.0	3415.0	3415.0	3415.0	3415.0	3415.0	30.0	3415.0	3415.0	30.0	30.0	30.0	30.0	30.0			45.0	45.0	45.0	45.0			
Volume Flow cuft/hr	6.0	6.1						16.0	57.0	15.9					15.9	15.9	205.0	230.1	1002.4	5.9	12.4	56.5	561.6	306.9	226.0	21003.7	80.9	80.9	342.9	262.6	21273.3	80.2	80.2			1511.1	40.2	40.4	1521.1			
Enthalpy MMBtu/hr	-1.157	-1.150						-6.828	-24.264	-6.808					-6.808	-6.808	-0.062	-8.019	-8.074	-0.002	0.013	-24.192	-32.253	-35.060	-1.787	-1.813	-33.272	-33.272	-33.272	-0.128	-1.941	-33.144	-33.144			-639.132	-17.020	-16.980	-636.325			
Average Mass Flow lb/hr	317.9	317.9	0.0	0.0	0.0	0.0	0.0	1000.0	3553.6	1000.0	0.0	0.0	0.0	0.0	1000.0	1000.0	3446.8	4764.7	4764.7	100.0	100.0	3553.6	8418.3	8418.3	3463.6	3463.6	4954.6	4954.6	4954.6	43.6	3507.3	4911.0	4911.0	0.0	0.0	93880.5	2500.0	2500.0	93880.5	0.0	0.0	0.0
Instantaneous Mass Flow lb/hr	317.9	317.9	0.0	0.0	0.0	0.0	0.0	1000.0	3553.6	1000.0	0.0	0.0	0.0	0.0	1000.0	1000.0	3446.8	4764.7	4764.7	100.0	100.0	3553.6	8418.3	8418.3	3463.6	3463.6	4954.6	4954.6	4954.6	43.6	3507.3	4911.0	4911.0	0.0	0.0	93880.5	2500.0	2500.0	93880.5	0.0	0.0	0.0
Mass Flow VAPOR lb/hr																																										
H2O																	0.0	1.2	1362.2	0.0	0.0		923.3	6.0	6.0	6.0			2.6	2.6	8.6											
ISOPROPANOL																	0.0	1.1	0.0	0.0	0.0		0.0	0.0	0.0	0.0			0.0	0.0	0.0											
CO2																	0.0	0.0	488.9	0.0	0.0		472.9	455.5	455.5	455.5			29.6	29.6	485.1											
N2																	2647.1	2643.4	2647.1	76.8	76.8		2718.5	2714.2	2714.2	2714.2			9.7	9.7	2723.9											
O2																	799.7	797.6	266.4	23.2	23.2		289.0	287.9	287.9	287.9			1.8	1.8	289.6											
Total VAPOR lb/hr	0.0	0.0	0.0	0.0	0.0	0.0	0.0	0.0	0.0	0.0	0.0	0.0	0.0	0.0	0.0	0.0	3446.8	3443.3	4764.7	100.0	100.0	0.0	4403.7	3463.6	3463.6	3463.6	0.0	0.0	43.6	43.6	3507.3	0.0	0.0	0.0	0.0	0.0	0.0	0.0	0.0	0.0	0.0	0.0
Mass Flow LIQUID lb/hr																																										
H2O	95.4	95.4						1000.0	3553.6	1000.0					1000.0	1000.0		1094.1				3553.6	3992.5	4909.7			4909.7	4909.7	4907.2			4907.2	4907.2			93880.5	2500.0	2500.0	93880.5			
ISOPROPANOL	222.5	222.5						0.0	0.0	0.0					0.0	0.0		221.4				0.0	0.0	0.0			0.0	0.0	0.0			0.0	0.0			0.0	0.0	0.0	0.0			
CO2	0.0	0.0						0.0	0.0	0.0					0.0	0.0		0.0				0.0	16.0	33.4			33.4	33.4	3.8			3.8	3.8			0.0	0.0	0.0	0.0			
N2	0.0	0.0						0.0	0.0	0.0					0.0	0.0		3.8				0.0	5.5	9.7			9.7	9.7	0.0			0.0	0.0			0.0	0.0	0.0	0.0			
O2	0.0	0.0						0.0	0.0	0.0					0.0	0.0		2.1				0.0	0.7	1.8			1.8	1.8	0.0			0.0	0.0			0.0	0.0	0.0	0.0			
Total LIQUID lb/hr	317.9	317.9	0.0	0.0	0.0	0.0	0.0	1000.0	3553.6	1000.0	0.0	0.0	0.0	0.0	1000.0	1000.0	0.0	1321.4	0.0	0.0	0.0	3553.6	4014.6	4954.6	0.0	0.0	4954.6	4954.6	4911.0	0.0	0.0	4911.0	4911.0	0.0	0.0	93880.5	2500.0	2500.0	93880.5	0.0	0.0	0.0
*** LIQUID PHASE ***																																										
Density lb/gal	7.1	7.0						8.3	8.3	8.4					8.4	8.4		8.0				8.4	6.7	8.2			8.2	8.2	8.2			8.2	8.2			8.3	8.3	8.3	8.3			

Signature Valid Blayne Monen
cn=Blayne Monen, o=Issued, ou=Configuration Management, c=US
2004.07.12 17:11:47 -07'00'

NO.	DATE	DESCRIPTION	DR	CK	DL	PE	APPD
2	7-12-04	IFD, UPDATED CASE 3	JG	SV	KD	NW	DJ
1	6-30-04	IFD, INCORPORATED COMMENTS, ADDED EQUIP SPECS	JG	SV	KD	NW	DJ
0	5-7-04	IFD, UPDATED W/ CURRENT M&EB DATA	JG	SV	KD	NW	DJ

QUALITY ☐ LEVEL 1 ☒ LEVEL 2 ☒ LEVEL 3 ☐ ALL

BECHTEL PARSONS BLUE GRASS
A Joint Venture of Bechtel National, INC. and Parsons Infrastructure & Technology Group Inc.

DOD PROGRAM MANAGER FOR ASSEMBLED CHEMICAL WEAPONS ASSESSMENT EDGEWOOD, MARYLAND

US ARMY ENGINEERING AND SUPPORT CENTER, HUNTSVILLE HUNTSVILLE, ALABAMA

GENERAL ATOMICS

BLUE GRASS CHEMICAL AGENT DESTRUCTION PILOT PLANT PROJECT (BGCAPP)

RICHMOND, KENTUCKY

CONTRACT NO. DAAA09-03-D-0023

SCWO PROCESS FLOW DIAGRAM

DRAWING NUMBER 24915-10-M5-SCWO-00001

SHEET 8 OF 8

REV 2

PROFESSIONAL STAMP

bgcapp_d3.dwg

090-TANK-101A/B/C EVAPORATOR FEED TANK	090-AGIT-101A/B/C EVAPORATOR FEED TANK AGITATOR	RO-CLA-201 CLARIFIER	RO-TNK-201 CLEAR WELL TANK	RO-FLT-201A/B MULTI-MEDIA FILTERS		RO-FLT-202 CARTRIDGE FILTER	RO-RO-201 R.O. UNIT
		RO-PMP-201 CLARIFIER PUMP		RO-PMP-202 CLARIFIED WATER PUMP	090-PUMP-101/102/111/112 R.O. UNIT FEED PUMP & SPARE		090-PUMP-110/120 EVAPORATOR FEED PUMP & SPARE

NOTES:

1. CHEMICAL STORAGE FOR R.O. UNIT WILL BE VIA TOTE BINS.
2. EQUIPMENT SHOWN ON THIS DRAWING FOR THE R.O. UNIT IS INCLUDED AS A PACKAGE UNIT IN THE MEL.
3. FOR SYMBOL DEFINITION SEE DRAWING 24915-00-M5-00-00002.

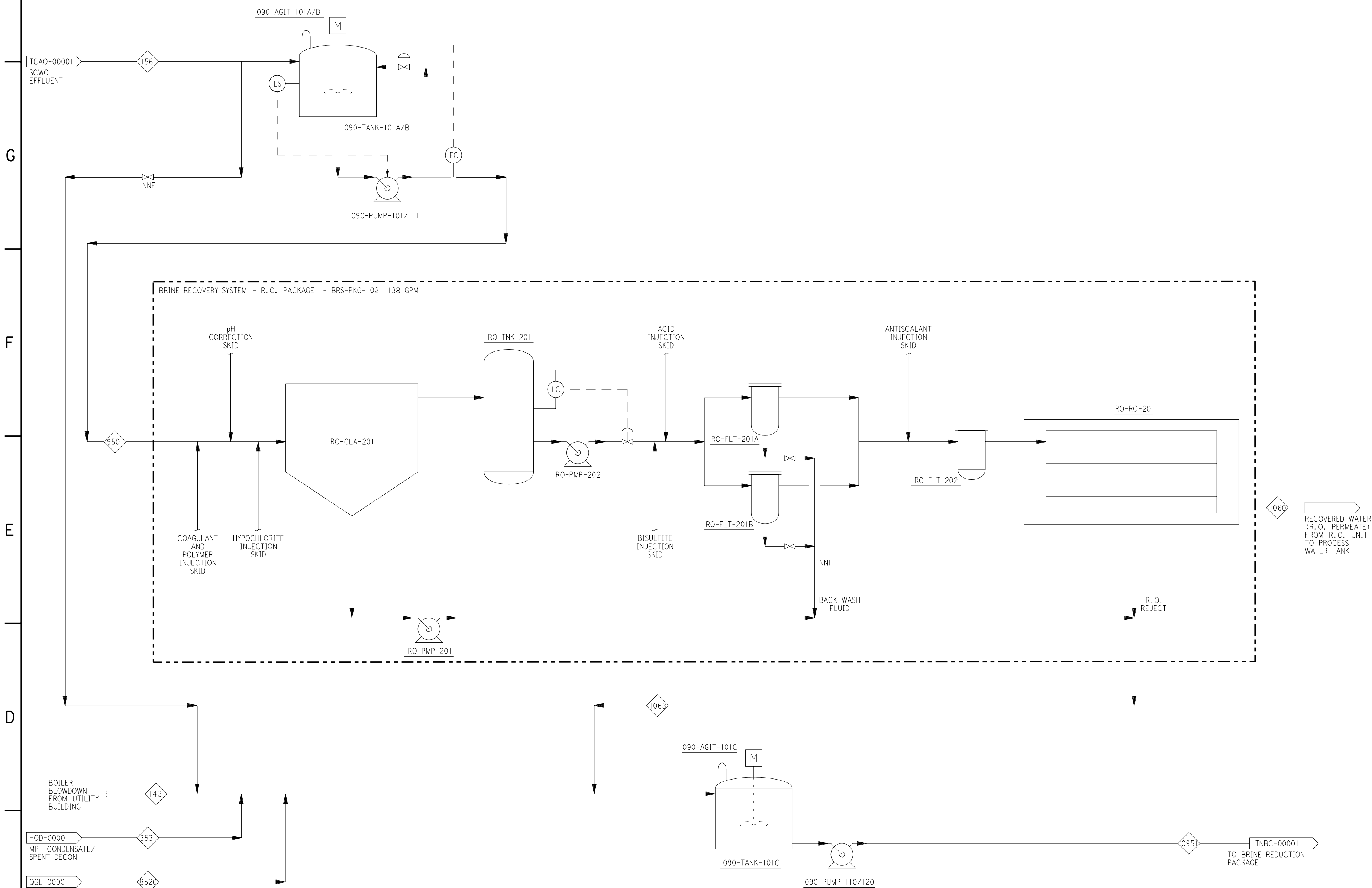

NO.	DATE	DESCRIPTION	DR	CK	DL	PE	APPD
Pa	2-19-04	RE-ISSUED FOR ENVIRONMENTAL PERMIT APPLICATION	GL	PC	SH		
P	12-31-03	ISSUED FOR ENVIRONMENTAL PERMIT APPLICATION	GL	PC	SH		

QUALITY ☐ LEVEL 1 ☐ LEVEL 2 ☐ LEVEL 3 ☐ ALL

BECHTEL PARSONS BLUE GRASS
A Joint Venture of Bechtel National, INC. and Parsons Infrastructure & Technology Group Inc.

DOD PROGRAM MANAGER FOR ASSEMBLED CHEMICAL WEAPONS ASSESSMENT EDGEWOOD, MARYLAND

US ARMY ENGINEERING AND SUPPORT CENTER, HUNTSVILLE HUNTSVILLE, ALABAMA

BLUE GRASS CHEMICAL AGENT DESTRUCTION PILOT PLANT PROJECT (BGCAPP)
RICHMOND, KENTUCKY

CONTRACT NO. DAAA09-03-D-0023

SCWO BUILDING WATER RECOVERY - R.O. UNIT PROCESS FLOW DIAGRAM

PROFESSIONAL STAMP

DRAWING NUMBER 24915-10-HK-TWR-00001 | SHEET OF | REV Pa

10-HK-TWR-1.PFZ BGCAPP_E2.BDR

DESIGN FILE: DGNSPEC$$
PLOTTED BY: USER$ ON DATE$$$$$$$$ AT SYTIME USING COLOR$$$$$$$$$$$$$$$$$$$$$$$$$$$$$$$$

E/C-PMP-102, 112	E/C-CPR-101	E/C-HEX-101	E/C-PMP-101	E/C-TNK-110	E/C-PMP-104, 114	E/C-COND-101	E/C-PMP-105, 115	E/C-HEX-102	E/C-PMP-106, 116	E/C-EVAP-101	E/C-PMP-103, 113	E/C-TNK-103	E/C-AGIT-103	E/C-FILT-101, 102	E/C-TNK-105	E/C-AGIT-105	E/C-TNK-104	E/C-AGIT-104	E/C-TNK-102	E/C-AGIT-102
CONDENSATE PUMP & SPARE	VAPOR COMPRESSOR	E/C FEED HEAT EXCHANGER	RECIRCULATION PUMP	CONDENSATE DRUM	EVAPORATOR BRINE TANK PUMP & SPARE	VENT CONDENSER	EVAPORATOR ANTIFOAM TANK PUMP & SPARE	RECYCLE HEAT EXCHANGER	SLURRY PUMP & SPARE	EVAPORATOR/CRYSTALLIZER	FILTRATE PUMP & SPARE	BRINE TANK	BRINE TANK AGITATOR	PRESSURE FILTER UNITS	SLURRY TANK	SLURRY TANK AGITATOR	ANTIFOAM TANK	ANTIFOAM TANK AGITATOR	FILTRATE TANK	FILTRATE TANK AGITATOR

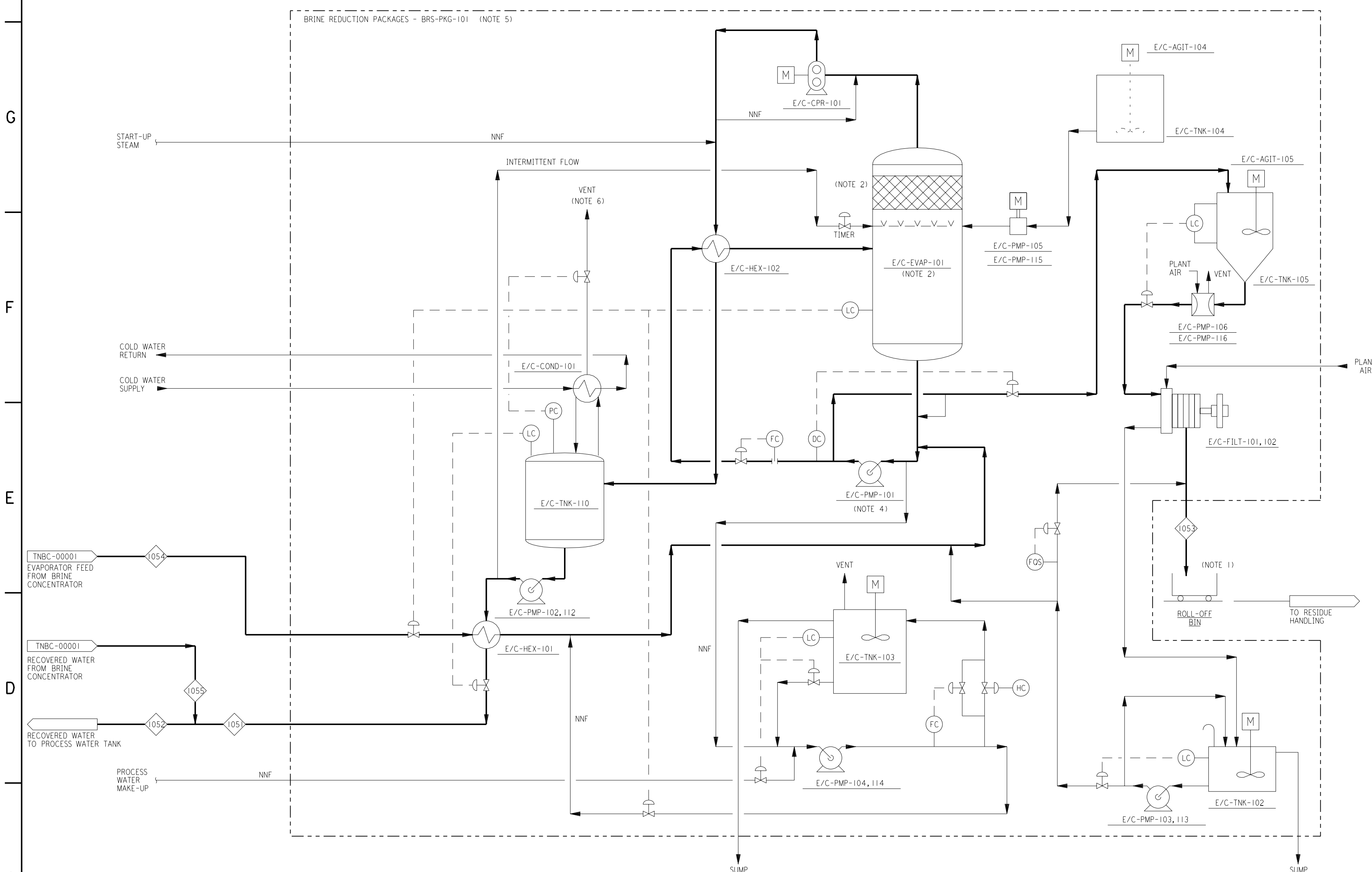

NOTES:

1. PRESSURE FILTER UNIT CAKE IS DISCHARGED BY GRAVITY TO ROLL OFF BIN LOCATED BELOW UNIT.
2. MIST ELIMINATORS OR VALVE TRAYS AS APPLICABLE.
3. FOR SYMBOL DEFINITION SEE DRAWING 24915-00-M5-00-00002.
4. PROVIDE WAREHOUSE SPARE.
5. EQUIPMENT SHOWN ON THIS DRAWING ARE INCLUDED AS A PACKAGE UNIT IN THE MEL.
6. VENT TO THE ATMOSPHERE THROUGH EVAPORATOR/CRYSTALLIZER VENT SYSTEM.

NO.	DATE	DESCRIPTION	DR	CK	DL	PE	APPD
Pa	2-19-04	RE-ISSUED FOR ENVIRONMENTAL PERMIT APPLICATION	GL	PC	SH		
P	12-31-03	ISSUED FOR ENVIRONMENTAL PERMIT APPLICATION	GL	PC	SH		

QUALITY ☐ LEVEL 1 ☐ LEVEL 2 ☐ LEVEL 3 ☐ ALL

BECHTEL PARSONS BLUE GRASS — A Joint Venture of Bechtel National, INC. and Parsons Infrastructure & Technology Group Inc.

DOD PROGRAM MANAGER FOR ASSEMBLED CHEMICAL WEAPONS ASSESSMENT EDGEWOOD, MARYLAND

US ARMY ENGINEERING AND SUPPORT CENTER, HUNTSVILLE HUNTSVILLE, ALABAMA

BLUE GRASS CHEMICAL AGENT DESTRUCTION PILOT PLANT PROJECT (BGCAPP)
RICHMOND, KENTUCKY

CONTRACT NO. DAAA09-03-D-0023

SCWO BUILDING BRP EVAPORATOR/CRYSTALLIZER PROCESS FLOW DIAGRAM

PROFESSIONAL STAMP

DRAWING NUMBER 24915-10-HK-TNBE-00001 | SHEET OF | REV Pa

10-HK-TNBE-1.PFZ BGCAPP_E2.BDR

DESIGN FILE: DGNSPEC$$$
PLOTTED BY: USER$ ON DATE$$$$$$$$ AT SYTIME USING COLOR$$

...\10-HK-TNBE-1.pfz 02/23/2004 04:23:28 PM

BC-TNK-106 CAUSTIC MIXING TANK (NOTE 5)
BC-HEX-103 FEED HEAT EXCHANGER
BC-COND-103 VENT CONDENSER
BC-TNK-107 EVAPORATOR CONDENSATE TANK
BC-TNK-109 EVAPORATOR ANTI-FOAM TANK
BC-COND-102 BRINE CONCENTRATOR CONDENSER
BC-EVAP-102 BRINE CONCENTRATOR EVAPORATOR
BC-TNK-108 CRYSTALLIZER FEED TANK

BC-PMP-107/117 FEED PUMP
BC-AGIT-106 CAUSTIC MIXING TANK AGITATOR
BC-AGIT-109 ANTI-FOAM TANK AGITATOR
BC-PMP-108/118 CONDENSATE TRANSFER PUMP
BC-PMP-120 ANTI-FOAM TANK PUMP
BC-PMP-110 RECIRCULATION PUMP
BC-AGIT-108 EVAPORATOR/CRYSTALLIZER FEED TANK AGITATOR
BC-CPR-102 VAPOR COMPRESSOR
BC-PMP-109/119 EVAPORATOR/CRYSTALLIZER FEED PUMP

NOTES:

1. MIST ELIMINATOR OR VALVE TRAYS AS APPLICABLE.
2. PROVIDE WAREHOUSE SPARE.
3. EQUIPMENT SHOWN ON THIS DRAWING ARE INCLUDED AS A PACKAGE UNIT IN THE MEL.
4. VENT TO THE ATMOSPHERE ABOVE THE TOP OF THE BRINE CONCENTRATOR.
5. pH CORRECTION MAY BE MOVED TO BEFORE BRS FEED TANKS DURING DETAIL DESIGN, BASED ON DETAIL pH ANALYSIS OF THE FEED.
6. FOR SYMBOL DEFINITION SEE DRAWING 24915-00-M5-00-00002.

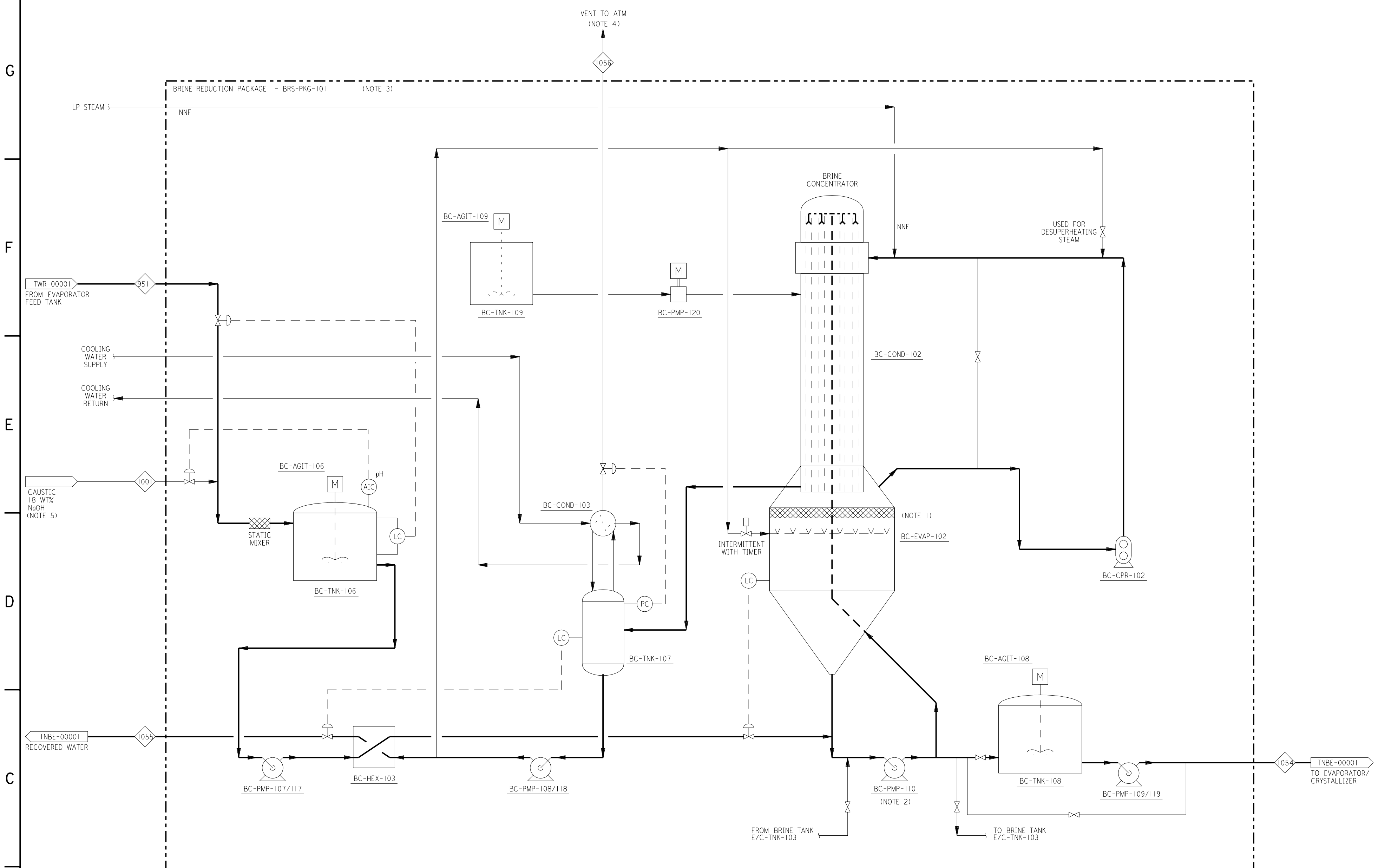

NO.	DATE	DESCRIPTION	DR	CK	DL	PE	APPD
Pa	2-19-04	RE-ISSUED FOR ENVIRONMENTAL PERMIT APPLICATION	GL	PC	SH		
P	12-31-03	ISSUED FOR ENVIRONMENTAL PERMIT APPLICATION	GL	PC	SH		

QUALITY ☐ LEVEL 1 ☐ LEVEL 2 ☐ LEVEL 3 ☐ ALL

BECHTEL PARSONS BLUE GRASS
A Joint Venture of Bechtel National, INC. and Parsons Infrastructure & Technology Group Inc.

DOD PROGRAM MANAGER FOR ASSEMBLED CHEMICAL WEAPONS ASSESSMENT EDGEWOOD, MARYLAND

US ARMY ENGINEERING AND SUPPORT CENTER, HUNTSVILLE HUNTSVILLE, ALABAMA

BLUE GRASS CHEMICAL AGENT DESTRUCTION PILOT PLANT PROJECT (BGCAPP)
RICHMOND, KENTUCKY

CONTRACT NO. DAAA09-03-D-0023

SCWO BUILDING BRP BRINE CONCENTRATOR PROCESS FLOW DIAGRAM

DRAWING NUMBER 24915-10-HK-TNBC-00001 | SHEET OF | REV Pa

PROFESSIONAL STAMP

10-HK-TNBC-1.PFZ BGCAPP_E2.BDR

DESIGN FILE: DGNSPEC$$
PLOTTED BY: USER$ ON DATE$$$$$$$$ AT SYTIME USING COLOR$$$

BGCAPP
MATERIAL BALANCE TABLE FOR TWR-00001 and TNBE-00001 PEAK CASE
BRINE REDUCTION SYSTEM - CASE AGENT GB COPROCESSING

STREAM NUMBER	950	951	1001	1052	1053	1056	1060	1063	1431	0353	8520
STREAM DESCRIPTION	SCWO Liquid	Feed to	18% Caustic	Recovered	Residue	Vent from	RO Permeate	RO Reject	Boiler	MPT OTS	EBH/ENR OTS
	Effluent	BRS	to BRS	Water from	to Residue	BRS	to Process	to Evaporator	Blow-down to	Condensate	Condensate
	to RO unit	Package	Package	BRS Package	Handling	Package	Tank	Feed Tank	E. Feed Tank	To BRS	To BRS
Temperature, °F	149	133	77	100	223	100	149	149	150	77	79
Pressure PSIA	24.35	59.35	59.35	14.35	14.35	19.35	14.35	14.35	14.35	62	50
Mass Flow lb/hr	37792.2	16027.8	114.8	14155.1	1987.5	0.0330	25776.1	12016.1	500.0	3413.5	98.2
N2		0.0230				0.0230				0.0230	
O2		0.0100				0.0100				0.0100	
H2		0.0000				0.0000				0.0000	
CO2	40.6	40.6			40.6		0.0	40.6		0.0070	
H2O	36823.0	14657.2	94.1	14155.1	596.2		25776.1	11046.9	500.0	3037.4	72.9
NAOH		0.0024	20.7		20.7					0.0024	
NACL(S)	259.0	259.4			259.4		0.0	259.0		0.4039	
NH4F(S)		0.0			0.0					0.0000	
NANO3(S)		0.0082			0.0082					0.0055	0.0027
NANO2(S)		0.0060			0.0060					0.0045	0.0015
NAHCO3(S)	16.0	33.8			33.8		0.0	16.0		16.7	1.2
NA2CO3(S)		12.1			12.1						12.1
NAF(S)	19.6	95.9			95.9		0.0	19.6		76.3	
NA2CO3(S)		8.4			8.4					8.4	
NA3PO4(S)		274.3			274.3					274.3	
NA2SO4(S)	578.4	578.4			578.4		0.0	578.4			
NAHPO4(S)	55.6	55.6			55.6		0.0	55.6			
DECON		12.0			12.0						12.0
NOTES	1				2b		2a		2c		

Notes
1. RO inlet consists of effluent from SCWO units.
2. Assumptions:
   2a. 70% of water is recovered from the RO unit.
   2b. All solids in the BRS feed is recovered. Residue recovered from the BRS has 30% moisture.
   3c. Boiler blow-down flow rate is 500 lb/hr

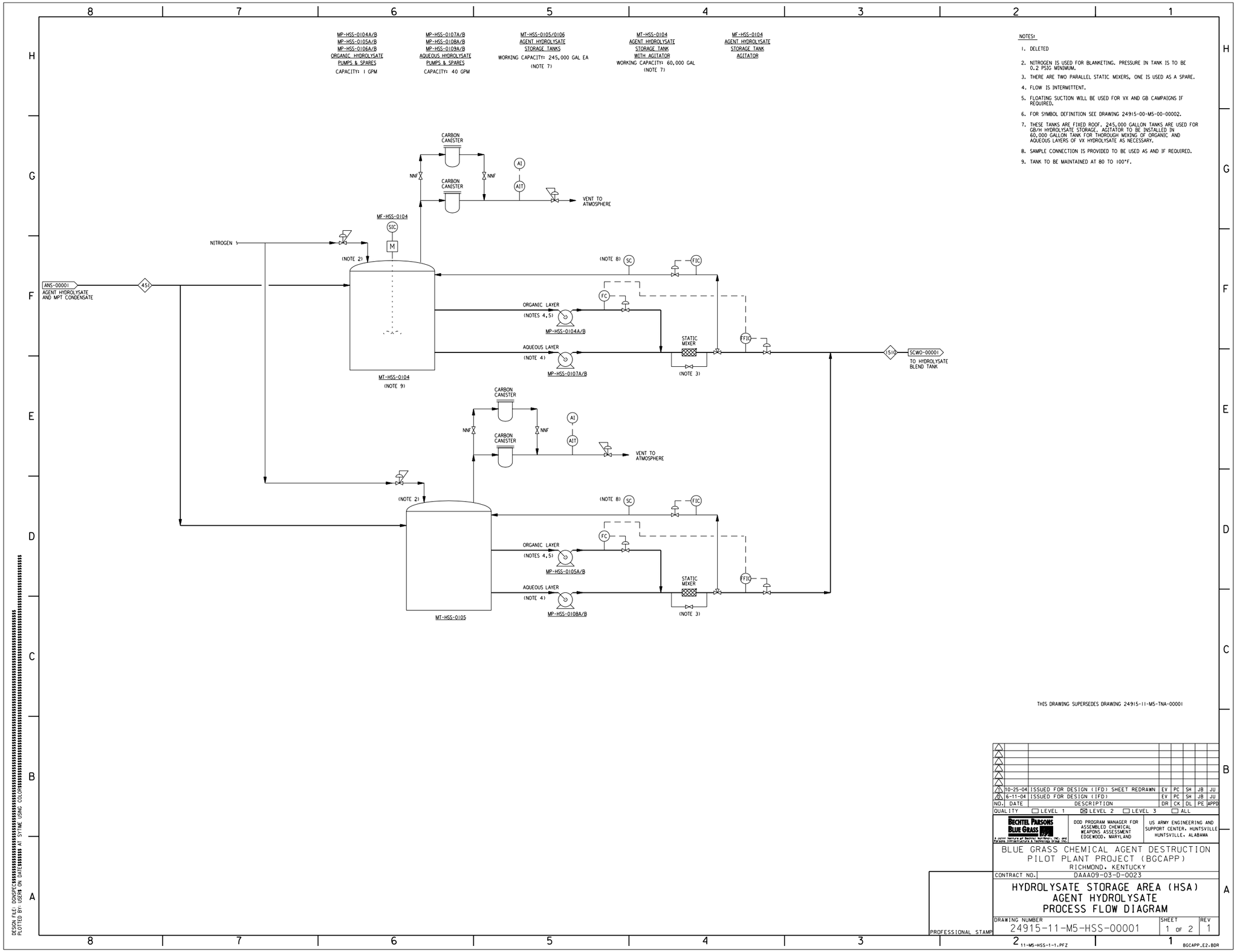

NOTES:

1. DELETED
2. NITROGEN IS USED FOR BLANKETING. PRESSURE IN TANK IS TO BE 0.2 PSIG MINIMUM.
3. THERE ARE TWO PARALLEL STATIC MIXERS, ONE IS USED AS A SPARE.
4. FLOW IS INTERMITTENT.
5. FLOATING SUCTION WILL BE USED FOR VX AND GB CAMPAIGNS IF REQUIRED.
6. FOR SYMBOL DEFINITION SEE DRAWING 24915-00-M5-00-00002.
7. THESE TANKS ARE FIXED ROOF. 245,000 GALLON TANKS ARE USED FOR GB/H HYDROLYSATE STORAGE. AGITATOR TO BE INSTALLED IN 60,000 GALLON TANK FOR THOROUGH MIXING OF ORGANIC AND AQUEOUS LAYERS OF VX HYDROLYSATE AS NECESSARY.
8. SAMPLE CONNECTION IS PROVIDED TO BE USED AS AND IF REQUIRED.
9. TANK TO BE MAINTAINED AT 80 TO 100°F.

THIS DRAWING SUPERSEDES DRAWING 24915-11-M5-TNA-00001

NO.	DATE	DESCRIPTION	DR	CK	DL	PE	APPD
2	10-25-04	ISSUED FOR DESIGN (IFD) SHEET REDRAWN	EV	PC	SH	JB	JU
1	6-11-04	ISSUED FOR DESIGN (IFD)	EV	PC	SH	JB	JU

QUALITY ☐ LEVEL 1 ☒ LEVEL 2 ☐ LEVEL 3 ☐ ALL

BECHTEL PARSONS BLUE GRASS
A joint venture of Bechtel National, Inc. and Parsons Infrastructure & Technology Group Inc.

DOD PROGRAM MANAGER FOR ASSEMBLED CHEMICAL WEAPONS ASSESSMENT EDGEWOOD, MARYLAND

US ARMY ENGINEERING AND SUPPORT CENTER, HUNTSVILLE HUNTSVILLE, ALABAMA

BLUE GRASS CHEMICAL AGENT DESTRUCTION PILOT PLANT PROJECT (BGCAPP)
RICHMOND, KENTUCKY

CONTRACT NO. DAAA09-03-D-0023

HYDROLYSATE STORAGE AREA (HSA) AGENT HYDROLYSATE PROCESS FLOW DIAGRAM

DRAWING NUMBER 24915-11-M5-HSS-00001 | SHEET 1 OF 2 | REV 1

PROFESSIONAL STAMP

DESIGN FILE: DONSEFCO
PLOTTED BY: USER# ON DATE$$$$$$ AT SYTMC USING COLOR$$$$$$

11-M5-HSS-1-1.PFZ BGCAPP_E2.BDR

MATERIAL BALANCE TABLE FOR PFD: 24915-11-M5-HSA-00001
AGENT HYDROLYSATE SYSTEM - CASE AGENT GB CO-PROCESSING

STREAM NUMBER	451	1510
DESCRIPTION	AGENT HYDROLYSATE FROM SAMPLING TANK	AGENT HYDROLYSATE TO SCWO BLEND TANK
TEMPERATURE, °F	100	100
PRESSURE, PSIA	34.23	64.23
INSTANTANEOUS FLOW RATE, GPM	204.2	40
DENSITY, LB/FT3	63.25	63.25
VISCOSITY, cP	0.74	7.4E-01
ENTHALPY, MM BTU/HR(Note 1)	-56.52	-5.82
COMPONENT FLOWS, LB/HR		
N2	2.4E-01	2.5E-02
O2		
CO2		
H2O		
HCLO		
TBA (Tributhyamine)	12.6	1.3
METHYLDIFLUORIDE	1.9	2.0E-01
FLUOROMETHANE	5.2E-01	5.3E-02
DIPU (1,3-Diisopropylurea)	29.6	3.0
"GB"-Pyro-Na (Na-salt of isopropyl methylphosphonic acid)	688.1	70.9
MPA-Na2 (Na-salt of methylphosphonic acid)		
IPA (isopropyl alcohol)		
SODIUM FLUORIDE	180.5	18.6
SODIUM CHLORIDE	1.0	1.1E-01
NaOH	145.0	14.9
WATER	7570.3	779.6
ALUMINUM	1.3	1.3E-01
NICKEL	3.3E-01	3.4E-02
COPPER	1.6E-02	1.7E-03
IRON	2.6E-03	2.7E-04
TOTAL PEAK LB/HR (Note 1)	8631.5	888.9
TOTAL AVGERAGE, LB/HR(Note 1)	5657.7	
NOTE		2

MATERIAL BALANCE TABLE FOR PFD: 24915-11-M5-HSA-00001
AGENT HYDROLYSATE SYSTEM - CASE AGENT VX CO-PROCESSING

STREAM NUMBER	451	1510
DESCRIPTION	AGENT HYDROLYSATE FROM AGENT HYDROLYZER	AGENT HYDROLYSATE TO SWCO BLEND TANK
TEMPERATURE, °F	100	100
PRESSURE, PSIA	34.23	64.23
INSTANTANEOUS FLOW RATE, GPM	204.9	40
DENSITY, LB/FT3	66.32	66.32
VISCOSITY, cP	2.70	2.7
ENTHALPY, MM BTU/HR(Note 1)	-22.99	-6.81
COMPONENT FLOWS, LB/HR		
N2	1.9E-01	5.6E-02
O2		
CO2		
H2O		
H2SO4		
SULFUR	9.0E-01	2.7E-01
Diisopropylcarbodiimide (DICDI-stabilizer)	16.0	4.7
EMPA Na (Na-isopropyl methylphosphonate)	317.4	93.9
MPA Na2 (Na2-methylphosphonate)	31.2	9.2
RS Na	399.9	118.4
Ethanol	10.3	3.0
RSSR	13.9	4.1
Na2SO4	2.8	8.2E-01
NaOH	142.8	42.3
H2O	2925.2	865.9
ALUMINUM	6.4E-02	1.9E-02
NICKEL	1.6E-02	4.7E-03
COPPER	2.6E-03	7.6E-04
IRON	3.2E-01	9.5E-02
TOTAL PEAK LB/HR (Note 1)	3861.0	1142.9
TOTAL AVGERAGE THROUGHPUT, LB/HR(Note 1)	2497.3	
NOTE(S)	3	2,3

MATERIAL BALANCE TABLE FOR PFD: 24915-11-M5-HSA-00001
AGENT HYDROLYSATE SYSTEM - CASE AGENT H

STREAM NUMBER	451	1510
DESCRIPTION	AGENT HYDROLYSATE FROM SAMPLING TANK	AGENT HYDROLYSATE TO SCWO BLEND TANK
TEMPERATURE, °F	100	100
PRESSURE, PSIA	34.23	64.23
INSTANTANEOUS FLOW RATE, GPM (NOTE 4)	202.5	40
DENSITY, LB/FT3	65.2	65.2
VISCOSITY, cP	0.69	0.69
ENTHALPY, MM BTU/HR(Note 1)	-22.39	-12.65
COMPONENT FLOWS, LB/HR		
DITHIANE	3.5	2.0
Polysufides (HS3)	4.3	2.4
TDG	118.2	66.8
O-OH	17.6	9.9
(CH2)6(OH)2S		
(CH2)6(S)2(OH)	54.0	30.5
NACL	147.1	83.2
NaOH	1.5	8.5E-01
Water	3130.7	1769.8
Nitrogen	8.0E-01	4.5E-01
Ethylene Glycol	1.9	1.1
S6	20.1	11.3
Fe	37.6	21.3
RCRA 8	1.9E-02	1.1E-02
Mn	2.9E-01	1.6E-01
Si	5.2E-02	2.9E-02
Other Metals/Elements	1.1E-01	6.47E-02
TOTAL PEAK, LB/HR(Note 1)	3537.9	2000.0
TOTAL AVERAGE, LB/HR(Note 1)	2325.4	
NOTE(S)		2

NOTES:

1. AVERAGED FOR 24 HOURS.
2. HOURLY FLOWRATE TO THE SCWO DAY TANK IS FOR FOUR SCWO UNITS AND IS BASED ON GA SUGGESTED ENERGETIC AND AGENT HYDROLYSATE BLENDING RATIO AS FOLLOWS:
   VX - 2.5:1
   GB - 3.5:1
   H - 1:1
3. ORGANIC LAYER IS APPROXIMATELY 2.5% OF THE TOTAL FLOW IN STREAM 451.
4. INSTANTANEOUS FLOW RATE IS BASED ON THE BLEND TANK CAPACITY. CASE H IS THE CONTROLLING CASE.

THIS DRAWING SUPERSEDES DRAWING 24915-11-M5-TNA-00001

NO.	DATE	DESCRIPTION	DR	CK	DL	PE	APPD
1	10-28-04	ISSUED FOR DESIGN (IFD)	EV	PC	SH	JB	JU
0	6-11-04	ISSUED FOR DESIGN (IFD)	EV	PC	SH	JB	JU

QUALITY ☐ LEVEL 1 ☒ LEVEL 2 ☐ LEVEL 3 ☐ ALL

BECHTEL PARSONS BLUE GRASS
A Joint Venture of Bechtel National, Inc. and Parsons Infrastructure & Technology Group, Inc.

DOD PROGRAM MANAGER FOR ASSEMBLED CHEMICAL WEAPONS ASSESSMENT EDGEWOOD, MARYLAND

US ARMY ENGINEERING AND SUPPORT CENTER, HUNTSVILLE HUNTSVILLE, ALABAMA

BLUE GRASS CHEMICAL AGENT DESTRUCTION PILOT PLANT PROJECT (BGCAPP)
RICHMOND, KENTUCKY

CONTRACT NO. DAAA09-03-D-0023

HYDROLYSATE STORAGE AREA (HSA) AGENT HYDROLYSATE PROCESS FLOW DIAGRAM

DRAWING NUMBER 24915-11-M5-HSS-00001 | SHEET 2 OF 2 | REV 1

PROFESSIONAL STAMP

DESIGN FILE: BGCAPP.E2.BDR
PLOTTED BY: USER ON DATE AT SYTME USING COLOR

11-M5-HSS-1-2.PFZ

BGCAPP_E2.BDR

MP-HSS-0604A/B
MP-HSS-0605A/B
MP-HSS-0606A/B
MP-HSS-0607A/B
ENERGITICS HYDROLYSATE
PUMP & SPARE

CAPACITY: 62.5 GPM

MT-HSS-0604/0605/0606/0607
ENERGETICS HYDROLYSATE
STORAGE TANKS

WORKING CAPACITY: 475,000 GAL EA

MF-HSS-0604/0605/0606/0607
ENERGETICS HYDROLYSATE
STORAGE TANK
SIDE AGITATOR
HP TBD
1 2

NOTES:
1 3
1. DELETED
2. NITROGEN IS USED FOR BLANKETING. PRESSURE IN TANK IS TO BE 0.2 PSIG MINIMUM.
3. DELETED
4. FOR SYMBOL DEFINITION SEE DRAWING 24915-00-M5-00-00002.
5. SAMPLE CONNECTION IS PROVIDED TO BE USED AS AND IF REQUIRED.

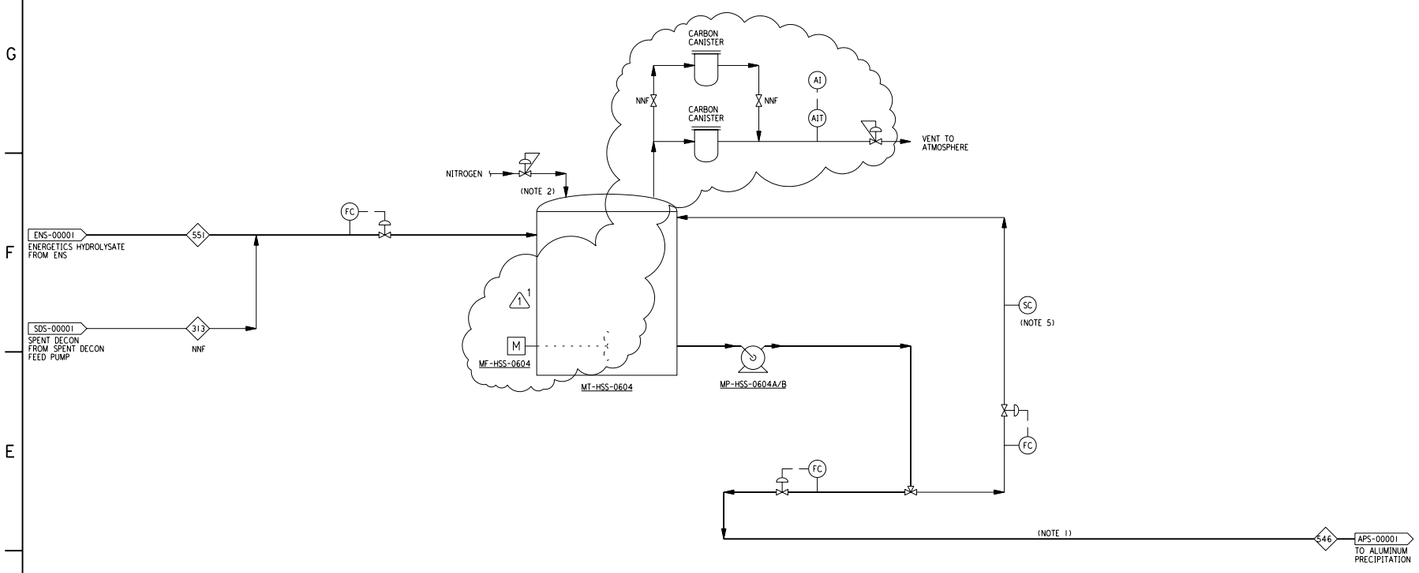

THIS DRAWING SUPERSEDES DRAWING 24915-11-M5-TNE-00001

NO.	DATE	DESCRIPTION	DR	CK	DL	PE	APPD
1	11-3-04	ISSUED FOR DESIGN (IFD)	WW	GO	SH	JB	JU
0	7-2-04	ISSUED FOR DESIGN (IFD)	WW	NI	SH	JB	JU

QUALITY ☐ LEVEL 1 ☒ LEVEL 2 ☐ LEVEL 3 ☐ ALL

BECHTEL PARSONS BLUE GRASS
A JOINT VENTURE OF BECHTEL NATIONAL, INC. AND PARSONS INFRASTRUCTURE & TECHNOLOGY GROUP, INC.

DOD PROGRAM MANAGER FOR ASSEMBLED CHEMICAL WEAPONS ASSESSMENT EDGEWOOD, MARYLAND

US ARMY ENGINEERING AND SUPPORT CENTER, HUNTSVILLE HUNTSVILLE, ALABAMA

BLUE GRASS CHEMICAL AGENT DESTRUCTION PILOT PLANT PROJECT (BGCAPP)
RICHMOND, KENTUCKY

CONTRACT NO. DAAA09-03-D-0023

HYDROLYSATE STORAGE AREA (HSA) ENERGETICS HYDROLYSATE PROCESS FLOW DIAGRAM

DRAWING NUMBER 24915-11-M5-HSS-00002
SHEET 1 OF 2
REV 1

PROFESSIONAL STAMP

DESIGN FILE: DGNSEC01
PLOTTED BY: USER4 ON DATE AT SYTMC USING COLOR

11-M5-HSS-2-1.PFZ
BGCAPP_E2.BDR

S:\2D\pr\11-M5-HSS-2-1.pfz 11/04/2004 04:28:07 PM

MATERIAL BALANCE TABLE FOR PFD: 24915-11-M5-HSS-00002
HYDROLYSATE STORAGE AREA (HSA) - ENERGETIC HYDROLYSATE
CASE: AGENT GB CO-PROCESSING PEAK THROUGHPUT

STREAM NUMBER	551	546
	Total ENR Energetic Hydrolysate To Storage	Energetic Hydrolysate To APS
Temperature, °F	110	110
Pressure, PSIA	80	60
Instantaneous Volume Flow, GPM (ACFM)	139.7	5.9
Density, LB/FT3	80.2	80.2
Viscosity, CP	48.56	48.56
MW		
Enthalpy, MMBTU/HR	-88.410	-22.324
Component Flows, LB/HR		
NITRODIPHENYLAMINE	0.082	0.021
NITROSODIPHENYLAMINE	2.426	0.613
NITROPHENOL	14.466	3.653
DIETHYLPHTHALATE	6.082	1.536
DIMETHYLPHTHALATE	12.230	3.088
ETHANOL	0.609	0.154
LEAD STEARATE		
SODIUM STEARATE	12.224	3.087
LEAD OXIDE	4.450	1.124
O2	6.00E-03	1.52E-03
N2	7.446	1.880
H2	2.26E-10	5.72E-11
CO2	6.37E-03	1.61E-03
CO	1.30E-05	3.27E-06
NH3	0.767	0.194
N2O	0.095	0.024
NO		
NO2	3.03E-05	7.64E-06
H2O	10842.541	2737.795
NAOH	1163.518	293.794
HCL	0.146	0.037
H2SO4		
HCLO	4.06E-04	1.02E-04
HNO3		
NA2SO4		
NANO2	388.794	98.172
NANO3	184.696	46.637
NACL		
NACLO	4.06E-04	1.02E-04
NH4CL(S)	77.014	19.446
AL(OH)3		
SODIUM FORMATE	416.796	105.243
SODIUM ACETATE	423.856	107.026
GLYCEROL	31.826	8.036
NAALO2	1294.192	326.790
METHANE	1.35E-05	3.41E-06
ETHYLENE	6.58E-05	1.66E-05
PROPYLENE	1.73E-04	4.38E-05
ACETONE	1.17E-03	2.95E-04
BENZENE	1.16E-03	2.94E-04
1,2-DICHLOROETHANE	3.56E-03	8.98E-04
ETHYLBENZENE	9.08E-01	2.29E-01
METHYLENE CHLORIDE		
STYRENE	1.61E+01	4.06E+00
TOLUENE	4.74E-03	1.20E-03
2-BUTANONE	3.00E-04	7.58E-05
XYLENE	2.67E-04	6.73E-05
CHLOROETHANE	1.56E-04	3.94E-05
2-HEXANONE	5.12E-05	1.29E-05
CHLOROFORM		
1,2-DICHLOROPROPANE	4.96E-05	1.25E-05
VINYL CHLORIDE	2.42E-05	6.11E-06
PHENOL	1.49E+00	3.75E-01
BENZOIC ACID	1.09E+00	2.74E-01
FLUORENE	1.54E-02	3.90E-03
HEXACHLOROCYCLOPENTADIENE	8.49E+00	2.14E+00
2-METHYLNAPHTHALENE	6.81E-03	1.72E-03
2-METHYLPHENOL	2.33E-02	5.88E-03
4-METHYLPHENOL	7.04E-03	1.78E-03
NAPHTHALENE	1.33E-01	3.36E-02
2,4-DIMETHYLPHENOL	2.64E-03	6.66E-04
BIS(2-CHLOROETHYL)ETHER	1.15E-01	2.90E-02
METHYLCHLORIDE	6.44E-04	1.63E-04
ETHYLPHENOL	1.01E+01	2.56E+00
ISOPROPYLPHENOL	4.14E+00	1.05E+00
ISOPROPYENYLPHENOL	8.41E+00	2.12E+00
BISPHENOL A	3.34E+01	8.43E+00
CYCLOPENTADIENE	1.00E-03	2.53E-04
METHYLCYCLOPENTADIENE	6.80E-02	1.72E-02
PROPIONALDEHYDE	1.72E-04	4.34E-05
ACROLEIN	2.00E-04	5.04E-05
METHYLACETYLENE	4.23E-04	1.07E-04
ACETALDEHYDE	1.97E-02	4.98E-03
ACETIC ACID	2.00E-01	5.04E-02
FURAN	6.65E-03	1.68E-03
METHYLFURFURAL	5.60E+00	1.41E+00
BENZENE DIOL	9.14E-01	2.31E-01
BENZENE DIOL DIACETATE	1.20E-01	3.04E-02
BENZENE TRIOL TRIACETATE	2.59E+00	6.53E-01
CYCLOPENTENONE	2.80E-02	7.07E-03
PENTENYNE	1.19E-04	3.00E-05
BUTADIENE	8.72E-05	2.20E-05
4-NITROPHENOL	1.25E+00	3.17E-01
BUTYLBENZYLPHTHALATE	1.60E-02	4.04E-03
BIS(2-ETHYLHEXYL)PHTHALATE	4.20E-02	1.06E-02
4-METHYL-3-HEXANOL	2.56E-01	6.46E-02
PHENAZINE	2.72E-01	6.87E-02
TETRADECANOIC ACID	2.12E-01	5.35E-02
1-PHENYL-1H-BENZOTRIAZOLE	5.28E-01	1.33E-01
9-ACRIDINAMINE	3.44E-01	8.69E-02
4,6-DIMETHOXY-2(2H)-BENZOFURANONE	3.44E-01	8.69E-02
BENZALDEHYDE, (PHENYLMETHYLENE)HYDRAZONE	3.76E-01	9.49E-02
HEXADECANOIC ACID	2.27E+00	5.74E-01
OCTADECANOIC ACID	7.56E+00	1.91E+00
THIIRANE	1.55E+00	3.92E-01
1-BUTANOL	1.57E+00	3.95E-01
1-METHYLETHYL-BENZENE	7.44E-01	1.88E-01
DECANE	7.84E-01	1.98E-01
UNDECANE	5.48E-01	1.38E-01
ANILINE	5.48E-01	1.38E-01
2-ETHYL-1-HEXANOL	3.92E-01	9.90E-02
PCB	6.80E-01	1.72E-01
TOTAL PEAK THROUGHPUT, LB/HR	14998.5	3787.2
TOTAL AVERAGE THROUGHPUT, LB/HR	11623.1	3824.5

MATERIAL BALANCE TABLE FOR PFD: 24915-11-M5-HSS-00002
HYDROLYSATE STORAGE AREA (HSA) - ENERGETIC HYDROLYSATE
CASE: AGENT VX CO-PROCESSING PEAK THROUGHPUT

STREAM NUMBER	551	546
	Total ENR Energetic Hydrolysate To Storage	Energetic Hydrolysate To APS
Temperature, °F	110	110
Pressure, PSIA	80	60
Instantaneous Volume Flow, GPM (ACFM)	152.3	5.5
Density, LB/FT3	80.2	80.2
Viscosity, CP	48.56	48.56
MW		
Enthalpy, MMBTU/HR	-95.010	-20.442
Component Flows, LB/HR		
NITRODIPHENYLAMINE	0.098	0.021
NITROSODIPHENYLAMINE	2.914	0.627
NITROPHENOL	17.298	3.722
DIETHYLPHTHALATE	7.282	1.567
DIMETHYLPHTHALATE	14.676	3.158
ETHANOL	0.531	0.114
LEAD STEARATE		
SODIUM STEARATE	14.662	3.155
LEAD OXIDE	5.338	1.149
O2	6.00E-03	1.29E-03
N2	8.026	1.727
H2	2.44E-10	5.25E-11
CO2	5.42E-03	1.17E-03
CO	2.19E-05	4.71E-06
NH3	0.858	0.185
N2O	0.108	0.023
NO		
NO2	2.24E-05	4.82E-06
H2O	11368.286	2445.970
NAOH	1396.354	300.436
HCL	0.146	0.031
H2SO4		
HCLO		
HNO3		
NA2SO4		
NANO2	466.684	100.410
NANO3	221.706	47.702
NACL		
NACLO	4.34E-04	9.34E-05
NH4CL(S)	92.203	19.838
AL(OH)3		
SODIUM FORMATE	499.560	107.484
SODIUM ACETATE	508.902	109.494
GLYCEROL	38.268	8.234
NAALO2	1553.028	334.145
METHANE	2.29E-05	4.92E-06
ETHYLENE	1.10E-04	2.37E-05
PROPYLENE	2.73E-04	5.87E-05
ACETONE	1.78E-03	3.83E-04
BENZENE	1.78E-03	3.84E-04
1,2-DICHLOROETHANE	5.32E-03	1.14E-03
ETHYLBENZENE	1.04E+00	2.23E-01
METHYLENE CHLORIDE		
STYRENE	1.83E+01	3.93E+00
TOLUENE	7.27E-03	1.56E-03
2-BUTANONE	4.52E-04	9.73E-05
XYLENE	4.29E-04	9.24E-05
CHLOROETHANE	2.38E-04	5.13E-05
2-HEXANONE	6.65E-05	1.43E-05
CHLOROFORM		
1,2-DICHLOROPROPANE	9.41E-05	2.02E-05
VINYL CHLORIDE	3.67E-05	7.90E-06
PHENOL	1.83E+00	3.94E-01
BENZOIC ACID	1.30E+00	2.80E-01
FLUORENE	1.77E-02	3.80E-03
HEXACHLOROCYCLOPENTADIENE	1.12E+01	2.40E+00
2-METHYLNAPHTHALENE	8.79E-03	1.89E-03
2-METHYLPHENOL	3.43E-02	7.38E-03
4-METHYLPHENOL	8.86E-03	1.91E-03
NAPHTHALENE	1.82E-01	3.91E-02
2,4-DIMETHYLPHENOL	2.82E-03	6.06E-04
BIS(2-CHLOROETHYL)ETHER	1.67E-01	3.59E-02
METHYLCHLORIDE	9.97E-04	2.15E-04
ETHYLPHENOL	1.33E+01	2.85E+00
ISOPROPYLPHENOL	6.12E+00	1.32E+00
ISOPROPYENYLPHENOL	1.17E+01	2.52E+00
BISPHENOL A	4.00E+01	8.62E+00
CYCLOPENTADIENE	1.52E-03	3.26E-04
METHYLCYCLOPENTADIENE	1.04E-01	2.23E-02
PROPIONALDEHYDE	2.66E-04	5.72E-05
ACROLEIN	3.05E-04	6.56E-05
METHYLACETYLENE	6.93E-04	1.49E-04
ACETALDEHYDE	2.99E-02	6.44E-03
ACETIC ACID	2.94E-01	6.32E-02
FURAN	1.01E-02	2.17E-03
METHYLFURFURAL	6.74E+00	1.45E+00
BENZENE DIOL	1.12E+00	2.42E-01
BENZENE DIOL DIACETATE	1.86E-01	4.00E-02
BENZENE TRIOL TRIACETATE	3.10E+00	6.68E-01
CYCLOPENTENONE	4.12E-02	8.86E-03
PENTENYNE	1.85E-04	3.99E-05
BUTADIENE	1.37E-04	2.94E-05
4-NITROPHENOL	1.42E+00	3.06E-01
BUTYLBENZYLPHTHALATE	1.80E-02	3.87E-03
BIS(2-ETHYLHEXYL)PHTHALATE	4.80E-02	1.03E-02
4-METHYL-3-HEXANOL	2.88E-01	6.20E-02
PHENAZINE	3.06E-01	6.58E-02
TETRADECANOIC ACID	2.40E-01	5.16E-02
1-PHENYL-1H-BENZOTRIAZOLE	6.02E-01	1.30E-01
9-ACRIDINAMINE	3.92E-01	8.43E-02
4,6-DIMETHOXY-2(2H)-BENZOFURANONE	3.92E-01	8.43E-02
BENZALDEHYDE, (PHENYLMETHYLENE)HYDRAZONE	4.26E-01	9.17E-02
HEXADECANOIC ACID	2.58E+00	5.56E-01
OCTADECANOIC ACID	8.60E+00	1.85E+00
THIIRANE	1.77E+00	3.81E-01
1-BUTANOL	1.78E+00	3.83E-01
1-METHYLETHYL-BENZENE	8.46E-01	1.82E-01
DECANE	8.92E-01	1.92E-01
UNDECANE	6.24E-01	1.34E-01
ANILINE	6.24E-01	1.34E-01
2-ETHYL-1-HEXANOL	4.44E-01	9.55E-02
PCB	8.20E-01	1.76E-01
TOTAL PEAK THROUGHPUT, LB/HR	16356.9	3519.3
TOTAL AVERAGE THROUGHPUT, LB/HR	12692.2	3550.9

MATERIAL BALANCE TABLE FOR PFD: 24915-11-M5-HSS-00002
HYDROLYSATE STORAGE AREA (HSA) - ENERGETIC HYDROLYSATE
CASE: AGENT H CO-PROCESSING PEAK THROUGHPUT

STREAM NUMBER	551	546
	Total ENR Energetic Hydrolysate To Storage	Energetic Hydrolysate To APS
Temperature, °F	110	110
Pressure, PSIA	80	60
Instantaneous Volume Flow, GPM (ACFM)	12.0	3.8
Density, LB/FT3	65.605	65.605
Viscosity, CP	1.226	1.226
MW		
Enthalpy, MMBTU/HR	-7.604	-12.699
Component Flows, LB/HR		
O2	3.89E-05	6.49E-05
N2	0.649	1.084
H2		
CO2		
CO		
NH3	7.77E-03	1.30E-02
N2O		
NO		
NO2	7.41E-07	1.24E-06
H2O	869.242	1451.625
NAOH	276.080	461.051
HCL		
H2SO4		
HCLO		
HNO3		
NA2SO4		
NANO2	9.119	15.229
NH4CL(S)	11.124	18.577
AL(OH)3		
SODIUM FORMATE	34.320	57.314
SODIUM ACETATE	2.320	3.874
GLYCEROL		
NAALO2	9.480	15.832
PCB		
TOTAL PEAK THROUGHPUT, LB/HR	1212.3	2024.6
TOTAL AVERAGE THROUGHPUT, LB/HR	1000.6	2154.0

△1

NOTES:

1. FLOWRATE TO THE SCWO DAY TANK IS FOR FOUR SCWO UNITS AND IS BASED ON GA SUGGESTED ENERGETIC AND AGENT HYDROLYSATE BLENDING RATIO.

THIS DRAWING SUPERSEDES DRAWING 24915-11-M5-TNE-00001

NO.	DATE	DESCRIPTION	DR	CK	DL	PE	APPD
1	11-4-04	ISSUED FOR DESIGN (IFD)	WW	GO	SH	JB	JU
0	7-2-04	ISSUED FOR DESIGN (IFD)	WW	EV	SH	JB	JU

QUALITY ☐ LEVEL 1 ☒ LEVEL 2 ☐ LEVEL 3 ☐ ALL

BECHTEL PARSONS BLUE GRASS
A Joint Venture of Bechtel National, INC. and Parsons Infrastructure & Technology Group Inc.

DOD PROGRAM MANAGER FOR ASSEMBLED CHEMICAL WEAPONS ASSESSMENT EDGEWOOD, MARYLAND

US ARMY ENGINEERING AND SUPPORT CENTER, HUNTSVILLE HUNTSVILLE, ALABAMA

BLUE GRASS CHEMICAL AGENT DESTRUCTION PILOT PLANT PROJECT (BGCAPP)
RICHMOND, KENTUCKY

CONTRACT NO. DAAA09-03-D-0023

HYDROLYSATE STORAGE AREA (HSA) ENERGETICS HYDROLYSATE PROCESS FLOW DIAGRAM

PROFESSIONAL STAMP

DRAWING NUMBER 24915-11-M5-HSS-00002 SHEET 2 OF 2 REV 1

11-M5-HSS-2-2.PFZ BGCAPP_E2.BDR

DESIGN FILE: DGNSPEC$$$$ PLOTTED BY: USER$ ON DATE$$$$$$ AT SYTIME USING COLOR$$$$

S:\2D\pr\11-M5-HSS-2-2.pfz 11/04/2004 04:18:48 PM

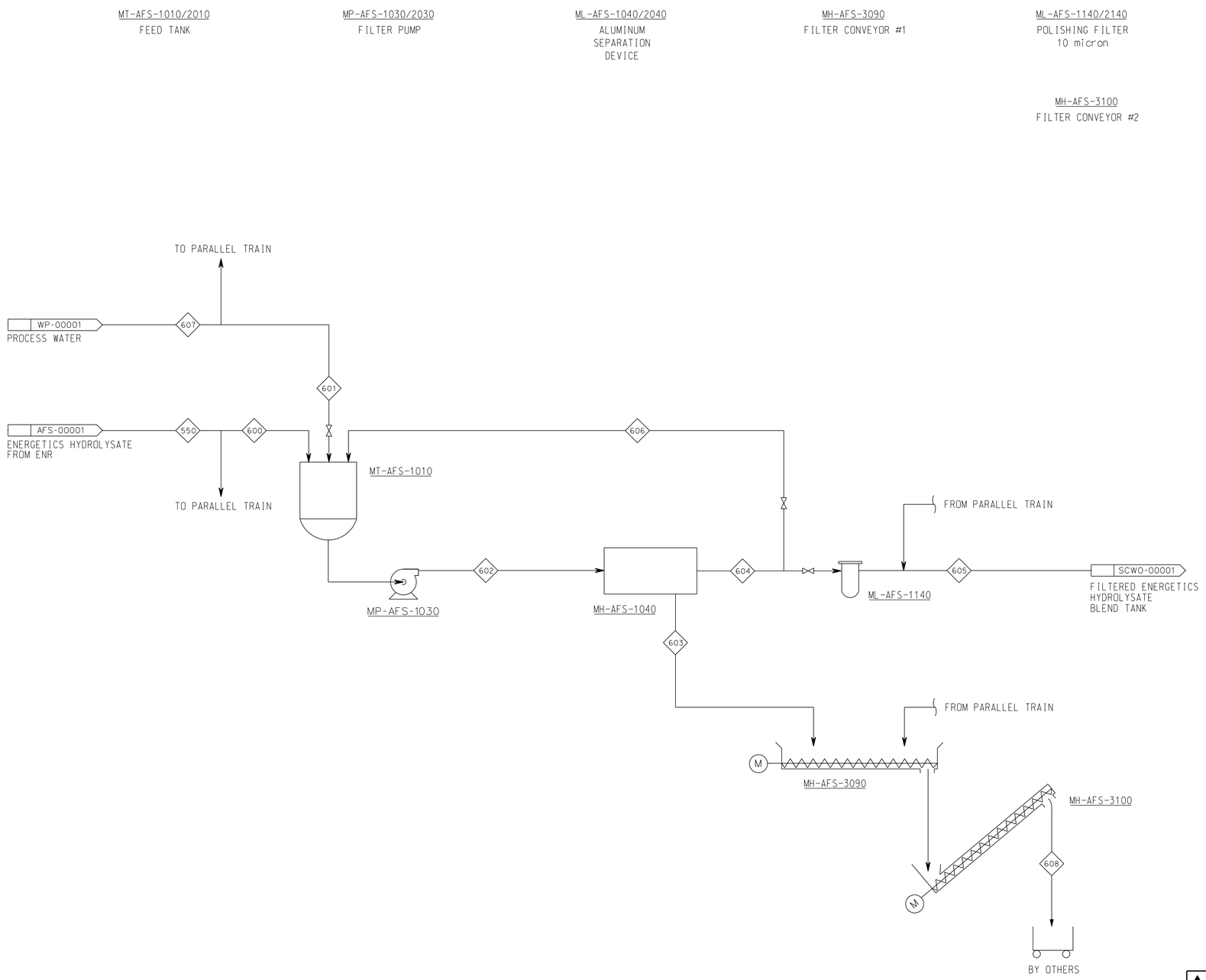

NOTES:

1. ALL INFORMATION, CALCULATIONS, AND ASSUMPTIONS USED IN THE DETERMINATION OF STREAM DATA MAY BE FOUND IN THE "MASS AND ENERGY BALANCE FOR THE ALUMINUM FILTRATION (AFS) SYSTEM - BGCAPP" GA DOCUMENT NO. 24915-07-M4-AFS-00001
2. ⟨XXX⟩ REPRESENTS M & EB STREAM NUMBERS

Signature Valid Blayne Monen cn=Blayne Monen, o=Issued, ou=Configuration Management, c=US 2004.07.19 13:40:20 -07'00'

NO.	DATE	DESCRIPTION	DR	CK	DL	PE	APPD
F		REVISED LAYOUT, DRAWING NUMBER CHANGED	NL	DG	AS	NW	DJ
E	5/11/04	IFA, REVISED PER CUSTOMER COMMENT	NL	DG	AS		
D	4/13/04	IFA, REVISED PER CUSTOMER COMMENT	JG	DK	AS		
C	3/26/04	IFA, REVISED PER CUSTOMER COMMENT	JG	DK	AS		
B	3/20/04	IFA, REVISED PER CUSTOMER COMMENT	JG	DK	AS		
A	1/15/04	ISSUED FOR REVIEW	EL	DK	AS		

QUALITY ☐ LEVEL 1 ☐ LEVEL 2 ☒ LEVEL 3 ☐ ALL

BECHTEL PARSONS BLUE GRASS
A Joint Venture of Bechtel National, INC. and Parsons Infrastructure & Technology Group Inc.

DOD PROGRAM MANAGER FOR ASSEMBLED CHEMICAL WEAPONS ASSESSMENT EDGEWOOD, MARYLAND

US ARMY ENGINEERING AND SUPPORT CENTER, HUNTSVILLE HUNTSVILLE, ALABAMA

GENERAL ATOMICS

BLUE GRASS CHEMICAL AGENT DESTRUCTION PILOT PLANT PROJECT (BGCAPP)
RICHMOND, KENTUCKY

CONTRACT NO. DAAA09-03-D-0023

ALUMINUM FILTRATION SYSTEM PROCESS FLOW DIAGRAM

DRAWING NUMBER 24915-21-M5-AFS-00001 | SHEET 1 OF 2 | REV F

THIS DRAWING SUPERSEDES DWG NO 24915-07-M5-ASF-00001

PROFESSIONAL STAMP

BGCAPP_D3.BDR

VX PEAK CASE

Stream Number:	550	600	601	602	603	604	605	606	607	608
Stream Description:	Energetic Hydrolysate from APS	Energetic Hydrolysate to Feed Tank	Process Water	Hydrolysate from Feed Tank	Solids Stream from Aluminum Separation Device	Clarified Hydrolysate Leaving Aluminum Separation Device	Clarified Hydrolysate to Hydrolysate Blend Tank	Pre-Coat Return Line	Process Water Supply	Combined Solids Stream from Aluminum Separation Device
Temperature F	100	100	77	99.3	99.3	99.3	99.3		77	99.3
Pressure psi	80	80	14.23	80	14.23	80	80		14.23	14.23
Instantaneous Flow gpm (ACFM)	118.016	59.008	1.483	TBD	TBD	TBD	6.915		2.965	TBD
Density lb/cuft	69.179	69.179	62.251	69.005	93.942	67.913	67.913		62.251	93.942
Viscosity cP										
Molecular Weight										
Enthalpy MMBtu/hr	-23.877	-11.938	-0.316	-12.254	-0.66	-11.594	-23.187		-0.632	-1.32
Mass Flow lb/hr										
AL(OH)3	209.327	104.664	0	104.664	104.664	0	0		0	209.328
WATER	3088.452	1544.226	46.268	1590.494	83.731	1506.763	3013.526		92.536	167.462
O2	0.018	0.009	0	0.009	0	0.009	0.017		0	0
N2	0.057	0.029	0	0.029	0.002	0.027	0.054		0	0.004
N2O	0.014	0.007	0	0.007	0	0.007	0.013		0	0
CO2	0	0	0	0	0	0	0		0	0
NH3	0.09	0.045	0	0.045	0.002	0.043	0.085		0	0.004
NITRODIPHENYLAMINE	0.572	0.286	0	0.286	0.015	0.271	0.542		0	0.03
NITROSODIPHENYLAMINE	0.31	0.155	0	0.155	0.008	0.147	0.294		0	0.016
NITROPHENOL	1.731	0.866	0	0.866	0.046	0.82	1.64		0	0.092
DIETHYLPHTHALATE	1.043	0.521	0	0.521	0.027	0.494	0.988		0	0.054
DIMETHYLPHTHALATE	2.133	1.067	0	1.067	0.056	1.01	2.021		0	0.112
ETHANOL	1.086	0.543	0	0.543	0.029	0.514	1.029		0	0.058
SODIUM STEARATE	2.077	1.039	0	1.039	0.055	0.984	1.968		0	0.11
LEAD OXIDE	0.756	0.378	0	0.378	0.02	0.358	0.716		0	0.04
PCB	0.116	0.058	0	0.058	0.003	0.055	0.11		0	0.006
HCLO	0.001	0.001	0	0.001	0	0	0.001		0	0
NH4HSO4	0.058	0.029	0	0.029	0.002	0.027	0.055		0	0.004
NH4HCO3	0.001	0.001	0	0.001	0	0	0.001		0	0
NH4CL	26.251	13.126	0	13.126	0.691	12.435	24.869		0	1.382
SODIUM FORMATE	70.418	35.209	0	35.209	1.854	33.355	66.711		0	3.708
SODIUM ACETATE	72.475	36.237	0	36.237	1.908	34.33	68.66		0	3.816
ACETONE	0.002	0.001	0	0.001	0	0.001	0.002		0	0
2-BUTANONE	0.001	0.001	0	0.001	0	0	0.001		0	0
2-HEXANONE	0	0	0	0	0	0	0		0	0
GLYCEROL	5.495	2.748	0	2.748	0.145	2.603	5.206		0	0.29
BENZENE	0.003	0.002	0	0.002	0	0.001	0.003		0	0
TOLUENE	0.008	0.004	0	0.004	0	0.004	0.008		0	0
ETHYL BENZENE	0.018	0.009	0	0.009	0	0.009	0.017		0	0
PHENOL	0.408	0.204	0	0.204	0.011	0.193	0.387		0	0.022
2-METHYL PHENOL	0.011	0.005	0	0.005	0	0.005	0.01		0	0
4-METHYL PHENOL	0.023	0.012	0	0.012	0.001	0.011	0.022		0	0.002
2,4-DIMETHYL PHENOL	0.016	0.008	0	0.008	0	0.008	0.015		0	0
BENZOIC ACID	1.648	0.824	0	0.824	0.043	0.781	1.561		0	0.086
STYRENE	0.006	0.003	0	0.003	0	0.003	0.006		0	0
XYLENE	0	0	0	0	0	0	0		0	0
NAPHTHALENE	0.074	0.037	0	0.037	0.002	0.035	0.07		0	0.004
2-METHYL NAPHTHALENE	0.102	0.051	0	0.051	0.003	0.048	0.097		0	0.006
METHYLENE CHLORIDE	0	0	0	0	0	0	0		0	0
VINYL CHLORIDE	0	0	0	0	0	0	0		0	0
1,2-DICHLOROETHANE	0.005	0.003	0	0.003	0	0.002	0.005		0	0
CHLOROFORM	0	0	0	0	0	0	0		0	0
CHLOROETHANE	0	0	0	0	0	0	0		0	0
1,2-DICHLOROPROPANE	0	0	0	0	0	0	0		0	0
HEXACHLOROCYCLOPENTADIENE	2.198	1.099	0	1.099	0.058	1.041	2.082		0	0.116
FLUORENE	0.073	0.036	0	0.036	0.002	0.035	0.069		0	0.004
NANO3	32.106	16.053	0	16.053	0.845	15.208	30.416		0	1.69
NANO2	65.811	32.906	0	32.906	1.732	31.173	62.346		0	3.464
NACL	156.234	78.117	0	78.117	4.112	74.005	148.009		0	8.224
NA2SO4	351.787	175.893	0	175.893	9.26	166.634	333.267		0	18.52
NAALO2	0.011	0.005	0	0.005	0	0.005	0.01		0	0
Total Average Flow lb/hr	4093.026	2046.517	46.268	2092.785	209.327	1883.454	3766.909	0	92.536	418.654

GB PEAK CASE

Stream Number:	550	600	601	602	603	604	605	606	607	608
Stream Description:	Energetic Hydrolysate from APS	Energetic Hydrolysate to Feed Tank	Process Water	Hydrolysate from Feed Tank	Solids Stream from Aluminum Separation Device	Clarified Hydrolysate Leaving Aluminum Separation Device	Clarified Hydrolysate to Hydrolysate Blend Tank	Pre-Coat Return Line	Process Water Supply	Combined Solids Stream from Aluminum Separation Device
Temperature F	100	100	77	100	99.3	100	100		77	99.3
Pressure psi	80	80	14.23	80	14.23	80	80		14.23	14.23
Instantaneous Flow gpm (ACFM)	126.755	63.377	0.000	TBD	TBD	TBD	7.276		0.000	TBD
Density lb/cuft	68.316	68.316	62.251	68.316	93.531	67.484	67.484		62.251	93.942
Viscosity cP										
Molecular Weight										
Enthalpy MMBtu/hr	-25.678	-12.839		-12.839	-0.64	-12.2	-24.399		0	-1.28
Mass Flow lb/hr										
AL(OH)3	201.458	100.729	0	100.729	100.729	0	0		0	201.458
WATER	3368.795	1684.398	0	1684.398	81.969	1602.429	3204.858		0	163.938
O2	0.019	0.009	0	0.009	0	0.009	0.018		0	0
N2	0.061	0.03	0	0.03	0.001	0.029	0.058		0	0.002
N2O	0.015	0.007	0	0.007	0	0.007	0.014		0	0
CO2	0.001	0.001	0	0.001	0	0	0.001		0	0
NH3	0.097	0.049	0	0.049	0.002	0.046	0.092		0	0.004
NITRODIPHENYLAMINE	0.551	0.276	0	0.276	0.013	0.262	0.524		0	0.026
NITROSODIPHENYLAMINE	0.298	0.149	0	0.149	0.007	0.142	0.283		0	0.014
NITROPHENOL	1.668	0.834	0	0.834	0.041	0.793	1.587		0	0.082
DIETHYLPHTHALATE	1.01	0.505	0	0.505	0.025	0.48	0.961		0	0.05
DIMETHYLPHTHALATE	2.058	1.029	0	1.029	0.05	0.979	1.958		0	0.1
ETHANOL	1.297	0.648	0	0.648	0.032	0.617	1.234		0	0.064
SODIUM STEARATE	2	1	0	1	0.049	0.951	1.903		0	0.098
LEAD OXIDE	0.728	0.364	0	0.364	0.018	0.346	0.693		0	0.036
PCB	0.111	0.056	0	0.056	0.003	0.053	0.106		0	0.006
HCLO	0.001	0.001	0	0.001	0	0	0.001		0	0
NH4HSO4	0.06	0.03	0	0.03	0.001	0.029	0.057		0	0.002
NH4HCO3	0.004	0.002	0	0.002	0	0.002	0.004		0	0
NH4CL	25.243	12.621	0	12.621	0.614	12.007	24.015		0	1.228
SODIUM FORMATE	67.937	33.968	0	33.968	1.653	32.315	64.631		0	3.306
SODIUM ACETATE	69.737	34.868	0	34.868	1.697	33.172	66.343		0	3.394
ACETONE	0.007	0.004	0	0.004	0	0.003	0.007		0	0
2-BUTANONE	0.002	0.001	0	0.001	0	0.001	0.002		0	0
2-HEXANONE	0	0	0	0	0	0	0		0	0
GLYCEROL	5.286	2.643	0	2.643	0.129	2.514	5.029		0	0.258
BENZENE	0.008	0.004	0	0.004	0	0.004	0.008		0	0
TOLUENE	0.024	0.012	0	0.012	0.001	0.011	0.023		0	0.002
ETHYL BENZENE	0.058	0.029	0	0.029	0.001	0.028	0.055		0	0.002
PHENOL	1.243	0.622	0	0.622	0.03	0.591	1.183		0	0.06
2-METHYL PHENOL	0.034	0.017	0	0.017	0.001	0.016	0.032		0	0.002
4-METHYL PHENOL	0.061	0.03	0	0.03	0.001	0.029	0.058		0	0.002
2,4-DIMETHYL PHENOL	0.042	0.021	0	0.021	0.001	0.02	0.04		0	0.002
BENZOIC ACID	2.347	1.174	0	1.174	0.057	1.116	2.233		0	0.114
STYRENE	0.019	0.009	0	0.009	0	0.009	0.018		0	0
XYLENE	0.001	0.001	0	0.001	0	0	0.001		0	0
NAPHTHALENE	0.198	0.099	0	0.099	0.005	0.094	0.188		0	0.01
2-METHYL NAPHTHALENE	0.216	0.108	0	0.108	0.005	0.103	0.205		0	0.01
METHYLENE CHLORIDE	0	0	0	0	0	0	0		0	0
VINYL CHLORIDE	0	0	0	0	0	0	0		0	0
1,2-DICHLOROETHANE	0.015	0.007	0	0.007	0	0.007	0.014		0	0
CHLOROFORM	0	0	0	0	0	0	0		0	0
CHLOROETHANE	0.001	0.001	0	0.001	0	0	0.001		0	0
1,2-DICHLOROPROPANE	0	0	0	0	0	0	0		0	0
HEXACHLOROCYCLOPENTADIENE	5.462	2.731	0	2.731	0.133	2.598	5.196		0	0.266
FLUORENE	0.086	0.043	0	0.043	0.002	0.041	0.082		0	0.004
NANO3	30.896	15.448	0	15.448	0.752	14.696	29.392		0	1.504
NANO2	63.332	31.666	0	31.666	1.541	30.125	60.25		0	3.082
NACL	150.281	75.141	0	75.141	3.657	71.484	142.968		0	7.314
NA2SO4	338.501	169.25	0	169.25	8.236	161.014	322.028		0	16.472
NAALO2	0.011	0.005	0	0.005	0	0.005	0.01		0	0
Total Average Flow lb/hr	4341.28	2170.64	0	2170.64	201.456	1969.177	3938.364	0	0	402.912

H PEAK CASE

Stream Number:	550	600	601	602	603	604	605	606	607	608
Stream Description:	Energetic Hydrolysate from APS	Energetic Hydrolysate to Feed Tank	Process Water	Hydrolysate from Feed Tank	Solids Stream from Aluminum Separation Device	Clarified Hydrolysate Leaving Aluminum Separation Device	Clarified Hydrolysate to Hydrolysate Blend Tank	Pre-Coat Return Line	Process Water Supply	Combined Solids Stream from Aluminum Separation Device
Temperature F	100	100	77	91.3	99.3	91.3	91.3		77	99.3
Pressure psi	80	80	14.23	80	14.23	80	80		14.23	14.23
Instantaneous Flow gpm (ACFM)	75.951	37.975	21.440	TBD	TBD	TBD	7.271		42.881	TBD
Density lb/cuft	74.175	74.175	62.251	70.274	96.751	70.888	70.888		62.251	93.942
Viscosity cP										
Molecular Weight										
Enthalpy MMBtu/hr	-16.6	-8.3	-4.567	-12.867	-0.044	-12.823	-25.646		0	-0.088
Mass Flow lb/hr										
AL(OH)3	13.963	6.982	0	6.982	6.982	0	0		0	13.964
WATER	1980.657	990.329	669.13	1659.459	5.585	1653.873	3307.746		1338.26	11.17
O2	0.007	0.004	0	0.004	0	0.003	0.007		0	0
N2	0.019	0.01	0	0.01	0	0.009	0.019		0	0
N2O	0	0	0	0	0	0	0		0	0
CO2	0	0	0	0	0	0	0		0	0
NH3	0.06	0.03	0	0.03	0	0.03	0.06		0	0
NITRODIPHENYLAMINE	0	0	0	0	0	0	0		0	0
NITROSODIPHENYLAMINE	0	0	0	0	0	0	0		0	0
NITROPHENOL	0	0	0	0	0	0	0		0	0
DIETHYLPHTHALATE	0	0	0	0	0	0	0		0	0
DIMETHYLPHTHALATE	0	0	0	0	0	0	0		0	0
ETHANOL	0	0	0	0	0	0	0		0	0
SODIUM STEARATE	0	0	0	0	0	0	0		0	0
LEAD OXIDE	0	0	0	0	0	0	0		0	0
PCB	0	0	0	0	0	0	0		0	0
HCLO	0	0	0	0	0	0	0		0	0
NH4HSO4	0.084	0.042	0	0.042	0	0.042	0.084		0	0
NH4HCO3	0	0	0	0	0	0	0		0	0
NH4CL	34.851	17.426	0	17.426	0.059	17.367	34.734		0	0.118
SODIUM FORMATE	53.138	26.569	0	26.569	0.089	26.48	52.959		0	0.178
SODIUM ACETATE	3.58	1.79	0	1.79	0.006	1.784	3.568		0	0.012
ACETONE	0	0	0	0	0	0	0		0	0
2-BUTANONE	0	0	0	0	0	0	0		0	0
2-HEXANONE	0	0	0	0	0	0	0		0	0
GLYCEROL	0	0	0	0	0	0	0		0	0
BENZENE	0	0	0	0	0	0	0		0	0
TOLUENE	0	0	0	0	0	0	0		0	0
ETHYL BENZENE	0	0	0	0	0	0	0		0	0
PHENOL	0	0	0	0	0	0	0		0	0
2-METHYL PHENOL	0	0	0	0	0	0	0		0	0
4-METHYL PHENOL	0	0	0	0	0	0	0		0	0
2,4-DIMETHYL PHENOL	0	0	0	0	0	0	0		0	0
BENZOIC ACID	0	0	0	0	0	0	0		0	0
STYRENE	0	0	0	0	0	0	0		0	0
XYLENE	0	0	0	0	0	0	0		0	0
NAPHTHALENE	0	0	0	0	0	0	0		0	0
2-METHYL NAPHTHALENE	0	0	0	0	0	0	0		0	0
METHYLENE CHLORIDE	0	0	0	0	0	0	0		0	0
VINYL CHLORIDE	0	0	0	0	0	0	0		0	0
1,2-DICHLOROETHANE	0	0	0	0	0	0	0		0	0
CHLOROFORM	0	0	0	0	0	0	0		0	0
CHLOROETHANE	0	0	0	0	0	0	0		0	0
1,2-DICHLOROPROPANE	0	0	0	0	0	0	0		0	0
HEXACHLOROCYCLOPENTADIENE	0	0	0	0	0	0	0		0	0
FLUORENE	0	0	0	0	0	0	0		0	0
NANO3	0	0	0	0	0	0	0		0	0
NANO2	14.115	7.058	0	7.058	0.024	7.034	14.067		0	0.048
NACL	222.685	111.343	0	111.343	0.375	110.968	221.936		0	0.75
NA2SO4	501.189	250.595	0	250.595	0.843	249.751	499.502		0	1.686
NAALO2	0.001	0.001	0	0.001	0	0	0.001		0	0
Total Average Flow lb/hr	2824.349	1412.179	669.13	2081.309	13.963	2067.341	4134.683	0	1338.26	27.926

Blayne Monen
cn=Blayne Monen, o=Issued, ou=Configuration Management, c=US
Signature Valid 2004.07.19 13:40:58 -07'00'

NO.	DATE	DESCRIPTION	DR	CK	DL	PE	APPD
F		REVISED LAYOUT, DRAWING NUMBER CHANGED	NL	DG	AS	NW	DJ
E	5/11/04	IFA, REVISED PER CUSTOMER COMMENT	NL	DG	AS		
D	4/13/04	IFA, REVISED PER CUSTOMER COMMENT	JG	DK	AS		
C	3/26/04	IFA, REVISED PER CUSTOMER COMMENT	JG	DK	AS		
B	3/20/04	IFA, REVISED PER CUSTOMER COMMENT	EL	DK	AS		
A	1/15/04	ISSUED FOR REVIEW (IFR)	EL	DK	AS		

QUALITY ☐ LEVEL 1 ☐ LEVEL 2 ☒ LEVEL 3 ☐ ALL

BECHTEL PARSONS BLUE GRASS
A Joint Venture of Bechtel National, INC. and Parsons Infrastructure & Technology Group Inc.

DOD PROGRAM MANAGER FOR ASSEMBLED CHEMICAL WEAPONS ASSESSMENT EDGEWOOD, MARYLAND

US ARMY ENGINEERING AND SUPPORT CENTER, HUNTSVILLE HUNTSVILLE, ALABAMA

GENERAL ATOMICS

BLUE GRASS CHEMICAL AGENT DESTRUCTION PILOT PLANT PROJECT (BGCAPP)
RICHMOND, KENTUCKY

CONTRACT NO. DAAA09-03-D-0023

ALUMINUM FILTRATION SYSTEM PROCESS FLOW DIAGRAM

DRAWING NUMBER 24915-21-M5-AFS-00001 | SHEET 2 OF 2 | REV F

PROFESSIONAL STAMP

bgcapp_d3.dwg

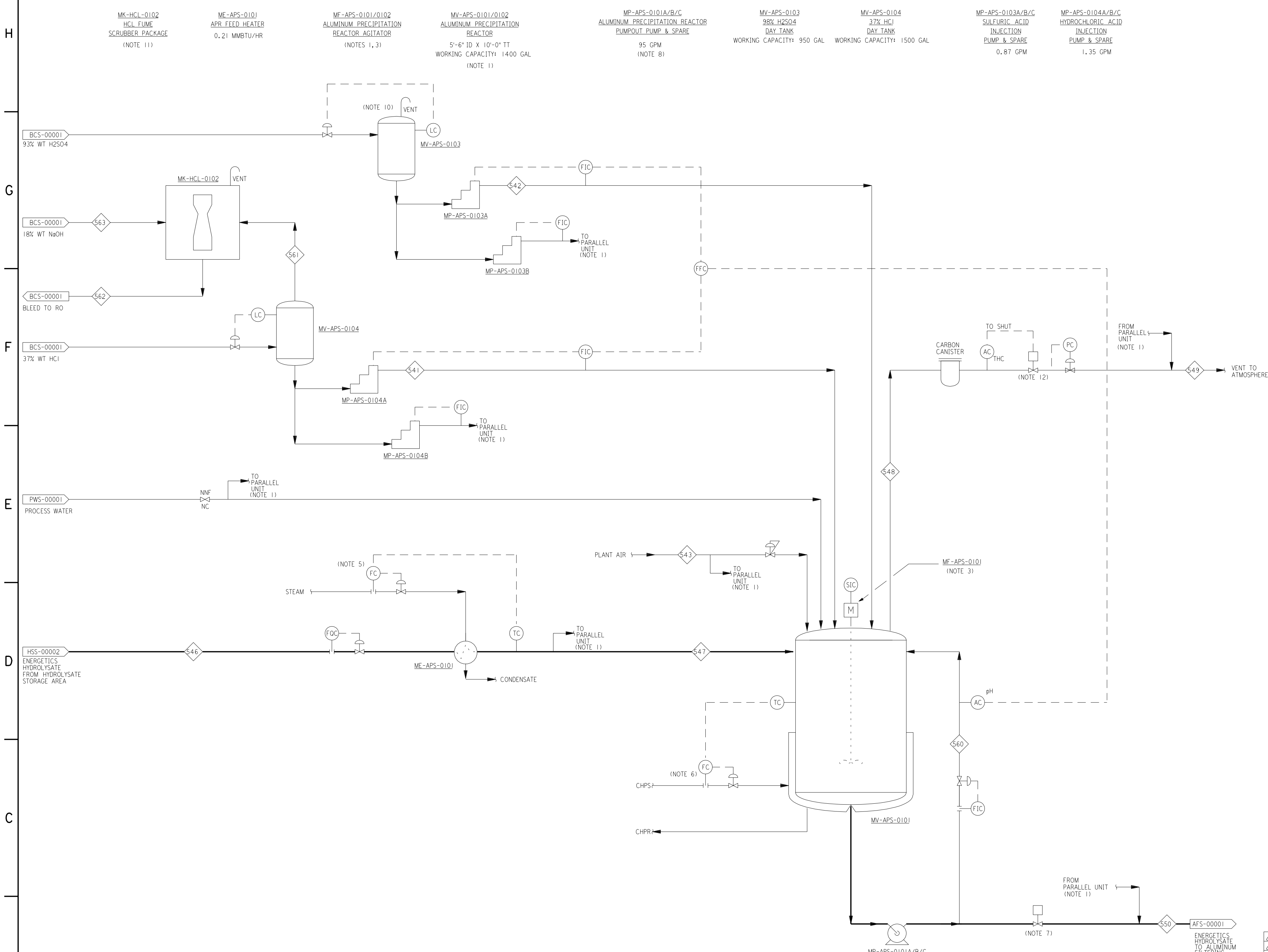

NOTES:

1. THERE ARE A TOTAL OF TWO 75% ALUMINUM PRECIPITATION REACTORS.
2. DELETED
3. VARIABLE SPEED MOTOR.
4. FOR SYMBOL DEFINITION SEE DRAWING 24915-00-M5-00-00002.
5. STEAM VALVE IS OPEN ONLY WHEN ENERGETIC HYDROLYSATE IS BEING LOADED INTO THE REACTOR.
6. CHILLED WATER VALVE IS OPEN ONLY WHEN ACIDS ARE BEING INJECTED INTO THE REACTOR AND SUBSEQUENTLY TO COOL NEUTRALIZED HYDROLYSATE FROM 140°F TO 100°F.
7. VALVE SHALL ONLY BE OPEN FOR PUMPING OUT REACTOR CONTENTS.
8. MP-APS-0101B IS THE COMMON SPARE.
9. BATCH SEQUENCING:

   THE TWO ALUMINUM PRECIPITATION REACTORS ARE OPERATED IN PARALLEL SIMULTANEOUSLY.

60 MIN	LOADING AND HEATING TO 140°F
135 MIN	NEUTRALIZATION AT 140°F
30 MIN	COOLING FROM 140°F TO 100°F
15 MIN	DRAINING

10. VENT TO SAFE LOCATION.
11. MK-HCL-0102 IS A HYDROCHLORIC ACID TANK SCRUBBER PACKAGE FURNISHED BY VENDOR.
12. CARBON CANISTER SHALL HAVE A SPARE.

NO.	DATE	DESCRIPTION	DR	CK	DL	PE	APPD
1	11-5-04	ISSUED FOR DESIGN (IFD) SHEET REDRAWN	WW	GO	SH	JB	JU
0	7-2-04	ISSUED FOR DESIGN (IFD)	WW	NI	SH	JB	JU

QUALITY ☐ LEVEL 1 ☐ LEVEL 2 ☒ LEVEL 3 ☐ ALL

BECHTEL PARSONS BLUE GRASS
A Joint Venture of Bechtel National, INC. and Parsons Infrastructure & Technology Group Inc.

DOD PROGRAM MANAGER FOR ASSEMBLED CHEMICAL WEAPONS ASSESSMENT EDGEWOOD, MARYLAND

US ARMY ENGINEERING AND SUPPORT CENTER, HUNTSVILLE HUNTSVILLE, ALABAMA

BLUE GRASS CHEMICAL AGENT DESTRUCTION PILOT PLANT PROJECT (BGCAPP)
RICHMOND, KENTUCKY

CONTRACT NO. DAAA09-03-D-0023

ALUMINUM FILTRATION BUILDING ALUMINUM PRECIPITATION PROCESS FLOW DIAGRAM

PROFESSIONAL STAMP

DRAWING NUMBER 24915-21-M5-APS-00001 | SHEET 1 OF 3 | REV 1

21-M5-APS-1-1.PFZ BGCAPP_E2.BDR

DESIGN FILE: DGNSPEC$$$
PLOTTED BY: USER$ ON DATE$$$$$$$ AT SYTIME USING COLOR$$$$$$$$$$$$$$$$$$$$$$$$$$$$$$$$$

S:\2D\pr\21-M5-APS-1-1.pfz 11/05/2004 11:19:11 AM

MATERIAL BALANCE TABLE FOR PFD: 24915-21-M5-APS-00001
ALUMINUM PRECIPITATION REACTOR
CASE 1: AGENT VX COPROCESSING
PEAK THROUGHPUT

STREAM NUMBER	541	542	543	546	547	548	549	550
	37% HCl Feed To APRs	98% H2SO4 Feed To APRs	Plant air Sweep To APRs	Energetic Hydrolysate To APR Feed Heater	Energetic Hydrolysate Load To one APR	APR Vent To Carbon Filters	Total APS Vent To Atmosphere	Neutralized Energetic Hydrolysate To AFS
TEMPERATURE, °F	77	77	77	100	140	140	140	100
PRESSURE, PSIA	65.00	65.00	30.00	35.00	25.00	25.00	25.00	80.00
INSTANTANEOUS FLOW, GPM (ACFM)	2.39	1.45	(24.71)	41.35	20.87	(3.93)	(7.81)	177.26
DENSITY, LB/FT3	73.1	114.0	0.150	64.9	64.3	0.107	0.107	69.1
VISCOSITY, cp	1.666	4.987	0.018	0.713	0.514	0.019	0.019	0.767
MW			28.83			27.46	27.46	
ENTHALPY, MMBTU/HR	-1.31	-0.98	-1.89E-06	-22.126	-11.00	-0.003	-0.006	-25.34
Mass Flow, LB/HR								
NDPA				0.572	0.286	6.2E-09	1.2E-10	0.572
NITROSODIPHENYLAMINE				0.310	0.155	1.4E-09	2.8E-11	0.310
NITROPHENOL				1.731	0.866	4.0E-08	8.1E-10	1.731
DI-ETHYLPHTHALATE				1.043	0.522	3.7E-08	7.4E-10	1.043
DI-METHYLPHTHALATE				2.133	1.066	3.0E-07	5.9E-09	2.133
ETHANOL				1.088	0.544	0.0010	2.0E-05	1.086
SODIUM STEARATE				2.077	1.039			2.077
LEAD OXIDE				0.756	0.378			0.756
O2			2.073	0.003	0.002	1.029	2.058	0.018
N2			7.038	4.620	2.310	5.801	11.601	0.057
H2								
CO2				0.002	0.001			
NH3				0.064	0.032	0.0005	0.001	0.087
N2O				0.016	0.008	0.0010	0.002	0.014
H2O	165.721	4.958		2878.087	1439.043	0.499	0.998	3088.46
NAOH				197.701	98.851			
HCL	97.266			0.109	0.036			
H2SO4		242.949						
HCLO				0.001	0.0005			0.001
NA2SO4								351.887
NANO2				65.809	32.905			65.818
NANO3				32.105	16.053			32.109
NACL								156.22
NH4HSO4								
NH4HCO3								0.001
NH4CL				26.346	13.200			26.287
AL(OH)3								209.327
SODIUM FORMATE				70.418	35.209			70.418
SODIUM ACETATE				72.475	36.237			72.475
NAALO2				220.021	110.01			0.011
ACETONE				0.002	0.001	4.3E-06	8.5E-08	0.002
2-BUTANONE				0.001	0.0005	4.4E-07	8.8E-09	0.001
HEXANONE						7.8E-09	1.6E-10	
GLYCEROL				5.495	2.748	9.6E-08	1.9E-09	5.495
BENZENE				0.003	0.001	2.2E-06	4.4E-08	0.003
TOULENE				0.008	0.004	2.3E-06	4.6E-08	0.008
ETHYLBENZENE				0.018	0.009	2.1E-06	4.3E-08	0.018
PHENOL				0.408	0.204	5.5E-06	1.1E-07	0.408
2-METHYLPHENOL				0.011	0.005	5.6E-07	1.1E-08	0.011
4-METHYLPHENOL				0.023	0.011	1.3E-07	2.6E-09	0.023
2,4-DIMETHYLPHENOL				0.016	0.008	6.4E-08	1.3E-09	0.016
BENZOIC ACID				1.648	0.824	5.8E-07	1.2E-08	1.648
STYRENE				0.006	0.003	5.2E-07	1.0E-08	0.006
XYLENE						2.9E-08	5.7E-10	
NAPHTHALENE				0.074	0.037	4.6E-07	9.1E-09	0.074
2-METHYLNAPHTHALENE				0.102	0.051	2.4E-07	4.9E-09	0.102
METHYLENE CHLORIDE						3.7E-09	7.5E-11	
VINYL CHLORIDE						5.8E-07	1.2E-08	
DI-CHLOROETHANE				0.005	0.003	3.7E-06	7.3E-08	0.005
CHLOROFORM						5.4E-09	1.1E-10	
CHLOROETHANE						2.6E-06	5.1E-08	
1,2-DICHLOROPROPANE						1.9E-08	3.9E-10	
HEXACHLORO-CYCLOPENTADIENE				2.198	1.099	4.7E-06	9.4E-08	2.198
FLUORENE				0.073	0.037	1.2E-08	2.5E-10	0.073
PCB				0.116	0.058			0.116
TOTAL PEAK, LB/HR	263.0	247.9	9.1	3,587.7	1,793.9	7.33	14.7	4,093.1
NOTES								1

MATERIAL BALANCE TABLE FOR PFD: 24915-21-M5-APS-00001
ALUMINUM PRECIPITATION REACTOR
CASE 2: AGENT GB COPROCESSING
PEAK THROUGHPUT

STREAM NUMBER	541	542	543	546	547	548	549	550
	37% HCl Feed To APRs	98% H2SO4 Feed To APRs	Plant air Sweep To APRs	Energetic Hydrolysate To APR Feed Heater	Energetic Hydrolysate Load To one APR	APR Vent To Carbon Filters	Total APS Vent To Atmosphere	Neutralized Energetic Hydrolysate To AFS
TEMPERATURE, °F	77	77	77	100	140	140	140	100
PRESSURE, PSIA	65.00	65.00	30.00	35.00	25.00	25.00	25.00	80.00
INSTANTANEOUS FLOW, GPM (ACFM)	2.30	1.39	(17.93)	44.24	22.32	(4.16)	(8.27)	189.81
DENSITY, LB/FT3	73.1	114.0	0.150	65.2	64.6	0.107	0.107	68.4
VISCOSITY, cp	1.666	4.987	0.018	0.701	0.506	0.019	0.019	0.752
MW			28.83			27.43	27.43	
ENTHALPY, MMBTU/HR	-1.26	-0.94	-1.89E-06	-23.996	-11.93	-0.003	-0.006	-27.08
Mass Flow, LB/HR								
NDPA				0.551	0.276	5.5E-09	1.1E-10	0.551
NITROSODIPHENYLAMINE				0.298	0.149	1.2E-09	2.5E-11	0.298
NITROPHENOL				1.668	0.834	3.5E-08	7.1E-10	1.668
DI-ETHYLPHTHALATE				1.010	0.505	3.3E-08	6.5E-10	1.010
DI-METHYLPHTHALATE				2.058	1.029	2.6E-07	5.2E-09	2.058
ETHANOL				1.299	0.650	0.001	2.0E-05	1.297
SODIUM STEARATE				2.077	1.039			2.077
LEAD OXIDE				0.756	0.378			0.756
O2			2.073	0.004	0.002	1.029	2.058	0.019
N2			7.038	5.034	2.517	6.005	12.010	0.061
H2								
CO2				0.004	0.002	0.0005	0.001	0.001
NH3				0.072	0.036	0.0005	0.001	0.091
N2O				0.017	0.008	0.001	0.002	0.015
H2O	159.459	4.771		3166.493	1583.247	0.523	1.046	3368.80
NAOH				190.180	95.090			
HCL	93.617			0.036	0.036			
H2SO4		233.828						
NA2SO4								338.621
NANO2				63.330	31.666			63.339
NANO3				30.895	15.448			30.899
NACL								150.25
NH4HSO4								
NH4HCO3								0.004
NH4CL				25.385	12.666			25.288
AL(OH)3								201.459
SODIUM FORMATE				67.937	33.968			67.937
SODIUM ACETATE				69.737	34.868			69.737
NAALO2				211.751	105.88			0.011
ACETONE				0.007	0.003	1.1E-05	2.2E-07	0.007
2-BUTANONE				0.002	0.001	1.2E-06	2.4E-08	0.002
HEXANONE						2.3E-08	4.6E-10	
GLYCEROL				5.286	2.643	8.4E-08	1.7E-09	5.286
BENZENE				0.008	0.004	5.6E-06	1.1E-07	0.008
TOULENE				0.024	0.012	6.2E-06	1.2E-07	0.024
ETHYLBENZENE				0.058	0.029	6.2E-06	1.2E-07	0.058
PHENOL				1.243	0.622	1.5E-05	3.0E-07	1.243
2-METHYLPHENOL				0.034	0.017	1.7E-06	3.3E-08	0.034
4-METHYLPHENOL				0.061	0.031	3.2E-07	6.3E-09	0.061
2,4-DIMETHYLPHENOL				0.042	0.021	1.5E-07	3.0E-09	0.042
BENZOIC ACID				2.347	1.174	7.5E-07	1.5E-08	2.347
STYRENE				0.019	0.009	1.5E-06	2.9E-08	0.019
XYLENE				0.001		8.3E-08	1.7E-09	0.001
NAPHTHALENE				0.198	0.099	1.1E-06	2.2E-08	0.198
2-METHYLNAPHTHALENE				0.216	0.108	4.7E-07	9.3E-09	0.216
METHYLENE CHLORIDE						6.8E-09	1.4E-10	
VINYL CHLORIDE						1.3E-06	2.5E-08	
DI-CHLOROETHANE				0.015	0.008	9.5E-06	1.9E-07	0.015
CHLOROFORM						1.3E-08	2.6E-10	
CHLOROETHANE				0.001		5.8E-06	1.2E-07	0.001
1,2-DICHLOROPROPANE						5.2E-08	1.0E-09	
HEXACHLORO-CYCLOPENTADIENE				5.462	2.731	1.1E-05	2.1E-07	5.462
FLUORENE				0.086	0.043	1.3E-08	2.6E-10	0.086
PCB				0.111	0.056			0.111
TOTAL PEAK, LB/HR	253.1	238.6	9.1	3,855.8	1,927.9	7.56	15.1	4,341.5
NOTES								1

NOTES:

1. STREAM 550 CONTAINS SUSPENDED ALUMINUM SALT PARTICLES (AL(OH)3).

NO.	DATE	DESCRIPTION	DR	CK	DL	PE	APPD
0	7-2-04	ISSUED FOR DESIGN (IFD)	WW	NI	SH	JB	JU

QUALITY ☐ LEVEL 1 ☐ LEVEL 2 ☒ LEVEL 3 ☐ ALL

BECHTEL PARSONS BLUE GRASS
A joint venture of Bechtel National, Inc. and Parsons Infrastructure & Technology Group Inc.

DOD PROGRAM MANAGER FOR ASSEMBLED CHEMICAL WEAPONS ASSESSMENT EDGEWOOD, MARYLAND

US ARMY ENGINEERING AND SUPPORT CENTER, HUNTSVILLE HUNTSVILLE, ALABAMA

BLUE GRASS CHEMICAL AGENT DESTRUCTION PILOT PLANT PROJECT (BGCAPP)
RICHMOND, KENTUCKY

CONTRACT NO. DAAA09-03-D-0023

ALUMINUM FILTRATION BUILDING ALUMINUM PRECIPITATION PROCESS FLOW DIAGRAM

DRAWING NUMBER 24915-21-M5-APS-00001 | SHEET 2 OF 3 | REV 0

PROFESSIONAL STAMP

21-M5-APS-1-2.PFZ

BGCAPP_E2.BDR

DESIGN FILE: S:\2D\pr\21M5-APS-1-2.plt
PLOTTED BY: SI439 ON 07-JUL-2004 AT 07:52 USING Color Table: S:\3DStds\ge\edeploi\Org\bw.ctb & Pen Table: S:\3DStds\ge\edeploi\Org\Bluegrass_F.tbl

MATERIAL BALANCE TABLE FOR PFD: 24915-21-M5-APS-00001
ALUMINUM PRECIPITATION REACTOR
CASE 3: AGENT H PROJECTILES
PEAK THROUGHPUT

STREAM NUMBER	541	542	543	546	547	548	549	550
	37% HCl Feed To APRs	98% H2SO4 Feed To APRs	Plant air Sweep To APRs	Energetic Hydrolysate To APR Feed Heater	Energetic Hydrolysate Load To one APR	APR Vent To Carbon Filters	Total APS Vent To Atmosphere	Neutralized Energetic Hydrolysate To AFS
TEMPERATURE, °F	77	77	77	100	140	140	140	100
PRESSURE, PSIA	65.00	65.00	30.00	35.00	25.00	25.00	25.00	80.00
INSTANTANEOUS FLOW, GPM (ACFM)	3.41	2.06	(16.71)	24.02	12.06	(2.59)	(5.16)	117.41
DENSITY, LB/FT3	73.1	114.0	0.150	65.4	65.1	0.107	0.107	72.0
VISCOSITY, cp	1.666	4.987	0.018	1.227	0.861	0.019	0.019	0.936
MW			28.83			27.61	27.61	
ENTHALPY, MMBTU/HR	-1.86	-1.39	-1.89E-06	-13.211	-6.58	-0.002	-0.004	-16.70
Mass Flow, LB/HR								
NDPA								
NITROSODIPHENYLAMINE								
NITROPHENOL								
DI-ETHYLPHTHALATE								
DI-METHYLPHTHALATE								
ETHANOL								
SODIUM STEARATE								
LEAD OXIDE								
O2			2.073			1.033	2.066	0.007
N2			7.038	2.668	1.334	4.843	9.686	0.019
H2								
CO2								
NH3				0.010	0.005	0.001	0.002	0.061
N2O								
H2O	236.085	7.064		1548.965	774.483	0.396	0.792	1980.66
NAOH				427.514	213.757			
HCL	138.583			0.181	0.072			
H2SO4		346.131						
NA2SO4								501.326
NANO2				14.114	7.058			14.117
NANO3								
NACL								222.66
NH4HSO4								
NH4HCO3								
NH4CL				35.040	17.546			34.887
AL(OH)3								13.963
SODIUM FORMATE				53.138	26.569			53.138
SODIUM ACETATE				3.58	1.790			3.58
NAALO2				14.677	7.34			0.0014
ACETONE								
2-BUTANONE								
HEXANONE								
GLYCEROL								
BENZENE								
TOULENE								
ETHYLBENZENE								
PHENOL								
2-METHYLPHENOL								
4-METHYLPHENOL								
2,4-DIMETHYLPHENOL								
BENZOIC ACID								
STYRENE								
XYLENE								
NAPHTHALENE								
2-METHYLNAPHTHALENE								
METHYLENE CHLORIDE								
VINYL CHLORIDE								
DI-CHLOROETHANE								
CHLOROFORM								
CHLOROETHANE								
1,2-DICHLOROPROPANE								
HEXACHLORO-CYCLOPENTADIENE								
FLUORENE								
PCB								
TOTAL PEAK, LB/HR	374.7	353.2	9.1	2,099.9	1,050.0	6.27	12.5	2,824.4
NOTES								1

NOTES:

1. STREAM 550 CONTAINS SUSPENDED ALUMINUM SALT PARTICLES (Al(OH)3).

NO.	DATE	DESCRIPTION	DR	CK	DL	PE	APPD
0	7-2-04	ISSUED FOR DESIGN (IFD)	WW	NI	SH	JB	JU

QUALITY ☐ LEVEL 1 ☐ LEVEL 2 ☒ LEVEL 3 ☐ ALL

BECHTEL PARSONS BLUE GRASS
A Joint Venture of Bechtel National, Inc. and Parsons Infrastructure & Technology Group Inc.

DOD PROGRAM MANAGER FOR ASSEMBLED CHEMICAL WEAPONS ASSESSMENT EDGEWOOD, MARYLAND

US ARMY ENGINEERING AND SUPPORT CENTER, HUNTSVILLE HUNTSVILLE, ALABAMA

BLUE GRASS CHEMICAL AGENT DESTRUCTION PILOT PLANT PROJECT (BGCAPP)
RICHMOND, KENTUCKY

CONTRACT NO. DAAA09-03-D-0023

ALUMINUM FILTRATION BUILDING ALUMINUM PRECIPITATION PROCESS FLOW DIAGRAM

DRAWING NUMBER 24915-21-M5-APS-00001 | SHEET 3 OF 3 | REV 0

PROFESSIONAL STAMP

21-M5-APS-1-3.PFZ

BGCAPP_E2.BDR

DESIGN FILE: S:\2D\pr\21-M5-APS-1-3.pfz
PLOTTED BY: 51439 ON 06-JUL-2004 AT 09:14 USING Color Table: S:\3DStds\ge\edeploi\Org\bw.ctb & Pen Table: S:\3DStds\ge\edeploi\Org\Bluegrass_F.tbl

Appendix D Contents

Material Safety Data Sheets (MSDSs)

List of MSDS

1. Blister Agent HD (Mustard) (H is not available)
2. Lethal Nerve Agent VX
3. Lethal Nerve Agent GB
4. RDX (Cyclonitrile)
5. trinitrotoluene (TNT)
6. tetryl
7. nitroglycerin (the explosive chemical, not the medicine)
8. nitrocellulose (the explosive chemical, not the lacquer filler)
9. diethylphthlate
10. Glycerine Triacetate - triacetin
11. lead azide
12. lead stearate
13. 2-nitrodiphenylamine

Material Safety Data Sheet

Distilled Mustard (HD)

Date: 22 September 1988
Revised: 01 October 2003

In the event of an emergency
Telephone the RDECOM Operations
Center's 24-hour emergency
Number: 410-436-2148

Section I - General Information

Manufacturer's Address:
U.S. Army Research Development Engineering Command (RDECOM)
Edgewood Chemical Biological Center (ECBC)
ATTN: AMSRD-ECB-CB-CR
Aberdeen Proving Ground, MD 21010-5424

Chemical Name: Bis- (2-chloroethyl) sulfide

Trade name and synonyms:
H; HD; HS
Mustard Gas
Sulfur mustard; Sulphur mustard gas
Sulfide, bis (2-chloroethyl)
Bis (beta-chloroethyl) sulfide
1,1'-thiobis(2-chloroethane)
1-chloro-2 (beta-chloroethylthio) ethane
Beta, beta'-dichlorodiethyl sulfide
2,2'dichlorodiethyl sulfide
Di-2-chloroethyl sulfideBeta, beta'-dichloroethyl sulfide
2,2'-dichloroethyl sulfide
EA 1033
Iprit
Kampstoff "Lost"; Lost
S-Lost; S-yperite; Schewefel-lost
Senfgas
Yellow Cross Liquid
Yperite;Y

Chemical Family: Chlorinated sulfur compound

Formula/Chemical Structure:
$C_4 H_8 C_{12} S$

$$ClCH_2CH_2SCH_2CH_2Cl$$

1

NFPA 704 Signal:

Health - 4
Flammability - 1
Reactivity - 1
Special - 0

Section II - Ingredients

Ingredients/Name: Sulfur Mustard
Percentage by Weight: 100%
Threshold Limit Value (TLV): 0.003mg/m^3

Section III - Physical Data

Boiling Point °F (°C): Calculated 423.5 °F (217.5 °C) (decomposed)

Vapor Pressure (mm Hg): 0.069 @ 20 °C
0.11 @ 25 °C

Vapor Density (Air=1): 5.4

Solubility (g/100g solvent): Negligible in water (0.92 @ 22 °C). Soluble in fats and oils, gasoline, kerosene, acetone, carbon tetrachloride, alcohol, tetrachloroethane, ethylbenzoate, and ether. Miscible with the organophosphorus nerve agents.

Specific Gravity (H_20=1): 1.27 @ 25 °C

Freezing/Melting Point (°C): 13.88

Liquid Density (g/mL): 1.274 g/mL @ 20 °C
1.268 g/mL @ 25 °C

Volatility (mg/m^3): 600 @ 20 °C
910 @ 25 °C

Viscosity (Centipoise): 5.175 @ 20 °C

Molecular Weight (g/mol): 159.08

Appearance and Odor: Normally amber to black colored liquid with garlic or horseradish odor. Water clear if pure. The odor threshold for HD is 0.6 mg/m^3 (0.0006 mg/L).

Section IV - Fire and Explosion Data

Flashpoint: 105 °C (Can be ignited by large explosive charges)

Flammability Limits (% by volume): Unknown

Extinguishing Media: Water, fog, and foam, CO_2. Avoid use of extinguishing methods that will cause splashing or

1

spreading of HD.

Special Fire Fighting Procedures: All persons not engaged in extinguishing the fire should be immediately evacuated from the area. Fires involving HD should be contained to prevent contamination to uncontrolled areas. When responding to a fire alarm in buildings or areas containing agents, fire-fighting personnel should wear full firefighter protective clothing (flame resistant) during chemical agent fire-fighting and fire rescue operations. Respiratory protection is required. Positive pressure, full facepiece, NIOSH-approved self-contained breathing apparatus (SCBA) will be worn where there is danger of oxygen deficiency and when directed by the fire chief or chemical accident/incident (CAI) operations officer. In cases where fire fighters are responding to a chemical accident/incident for rescue/reconnaissance purposes they will wear appropriate levels of protective clothing (See Section VIII).

Do not breathe fumes. Skin contact with agent must be avoided at all times. Although the fire may destroy most of the agent, care must still betaken to assure the agent or contaminated liquids do not further contaminate other areas or sewers. Contact with the agent liquid or vapor can be fatal.

Section V - Health Hazard Data

Airborne Exposure Limit (AEL): The AEL for HD is 0.003 mg/m^3 as found in "DA Pam 40-173, Occupational Health Guidelines for the Evaluation and Control of Occupational Exposure to Mustard Agents H, HD, and HT". To date, the Occupational Safety and Health Administration (OSHA) have not promulgated a permissible exposure concentration for HD.

Effects Of Overexposure: HD is a vesicant (causing blisters) and alkylating agent producing cytotoxic action on the hematopoietic (blood-forming) tissues, which are especially sensitive. The rate of detoxification of HD in the body is very slow and repeated exposures produce a cumulative effect. HD is a human carcinogen as cited by the International Agency for Research on Cancer (IARC).

Median doses of HD in man are:
LD50 (skin, liquid) = 100 mg/kg
ICt50 (skin, vapor) = 2000 mg-min/m^3 at 70 - 80 °F (humid environment)
= 1000 mg-min/m^3 at 90 °F (dry environment)
ICt50 (eyes, vapor) = 200 mg-min/m^3
LCt50 (inhalation) = 1500 mg-min/m^3
LCt50 (skin, vapor) = 10,000 mg-min/m^3
LD50 (oral) = 0.7 mg/kg

Acute Physiological Action of HD is classified as Local and Systemic.

Local Actions: HD affects both the eyes and the skin. Eye absorption results in injuries ranging from mild conjunctivitis to corneal necrosis and opacifiction (blindness). Infection of the ocular lesions is common. Skin absorption results initially in capillary hyperemia and dermal edema, usually followed by vesication. Being lipid soluble, HD can be absorbed into all organs. Skin penetration is rapid without skin irritation. Swelling (blisters) and reddening (erythema) of the skin occurs after a latency period of 4-24 hours following the exposure, depending on degree of exposure and individual sensitivity. Tender skin, mucous membrane and perspiration-covered skin is more sensitive to the effects of HD. The skin healing process is very slow. The skin effects of mustard agent are dependent on the concentration of the agent and the environmental conditions: a hot, humid atmosphere promotes the most severe skin reaction.

Systemic Actions: Effects can occur after any exposure with much individual variation. Like other alkylating agents, systemic absorption results in injury to the bone marrow, lymph nodes, and spleen producing leukopenia and thrombocytopenia. Other systemic effect include: fever; CNS depression; bradycardia or cardiac irregularities; hemoconcentration; and shock.

Chronic Exposure: HD can cause sensitization, chronic lung impairment, (cough, shortness of breath, chest pain), cancer of the mouth, throat, respiratory tract and skin, and leukemia. HD has also been shown to be mutagenic and

1

carcinogenic in animals. Prolonged human exposure has been associated with cancer of the tongue, paranasal sinus, larynx, bronchus, lung, and mediastinum (cavity between the right and left lung). Tumors observed have been of squamous (scale like) or undifferentiated (alterated) cell types. Consider the possibility of skin caner because of the frequency of this lesion in animal studies. Since sulfur mustard (HQ) agent is similar in its effects to nitrogen mustard, which has been associated with human leukemia, this disease might also be expected to occur in humans chronically exposed to mustard.

Emergency And First Aid Procedures:

Inhalation: Hold breath until respiratory protective mask is donned. Immediately remove from the HD source. Seek medical attention immediately. If breathing is difficult, administer oxygen. If breathing has stopped, give artificial respiration. Mouth-to-mouth resuscitation should be used when approved mask-bag or oxygen delivery systems are not available. Do not use mouth-to-mouth resuscitation when facial contamination is present.

Eye Contact: Speed in decontaminating the eyes is absolutely essential. Remove the person from the liquid source immediately; flush the eyes immediately with sterile saline or water for at least 15 minutes by tilting the head to the side, pulling the eyelids apart with the fingers and pouring water slowly into the eyes. Do not cover eyes with bandages but, if necessary, protect eyes by means of dark or opaque goggles. Transfer the patient to a medical facility.

Skin Contact: Don respiratory protective mask. Remove the victim from agent sources immediately. Seek medical attention immediately. Immediately remove all contaminated clothing in a clean air environment as quickly as possible. Flush contaminated skin area with warm or hot water, using liquid soap, and copious amounts of the water, apply mild to moderate friction with a single-use sponge or washcloth in the first and second wash (do not use a brush, it may enhance absorption into the skin). Shampoo can be used to wash the hair to prevent vapor off gassing. The final decontamination should be rinses with copious amounts of warm or hot water.

Ingestion: If ingested, directly or from liquid contaminated food or drink, necrosis, diarrhea, GI hemorrhage, nausea and vomiting will be present. DO NOT induce vomiting. Give victim milk to drink. Seek medical attention immediately.

Section VI - Reactivity Data

Stability: Stable at ambient temperatures. Decomposition temperature is 300-351 °F (149 -177 °C). Mustard is a persistent agent depending on pH and moisture, and has been known to remain active for up to three years in soil.

Incompatibility: Rapidly corrosive to brass at 65 °C. Will corrode steel at a rate of .0001 in. of steel per month at 65 °C.

Hazardous Decomposition: Mustard will hydrolyze to form HCl and thiodiglycol.

Hazardous Polymerization: Does not occur.

Section VII - Spill, Leak, And Disposal Procedures

Steps To Be Taken In Case Material Is Released Or Spilled: Only personnel in full protective clothing (See Section VIII) will be allowed in an area where HD is spilled. See Section V for emergency and first aid instructions.

Recommended Field Procedures: The HD should be contained using vermiculite, diatomaceous earth, clay or fine sand and neutralized as soon as possible using copious amounts of 5.25% sodium hypochlorite solution. Scoop up all material and place in an approved DOT container. Cover the contents with decontaminating solution as above. The exterior of the container will be decontaminated and labeled according to EPA and DOT regulations. All leaking containers will be over packed with sorbent (e.g. vermiculite) placed between the interior and exterior

1

containers. Decontaminate and label according to EPA and DOT regulations. Dispose of the material in accordance with waste disposal methods provided below. Conduct general area monitoring with an approved monitor to confirm that the atmospheric concentrations do not exceed the airborne exposure limits (See Sections II and VIII).

If 5.25% sodium hypochlorite solution is not available then the following decontaminants may be used instead and are listed in the order of preference:**Calcium Hypochlorite, Decontamination Agent (DS2), and Super Tropical Bleach Slurry (STB).

****Warning:** DO NOT USE PURE SOLID, UNDILUTED CALCIUM HYPOCHLORITE (HTH); it will BURN UPON CONTACT to liquid mustard.

Recommended Laboratory Procedures: Use a minimum of 65 grams of decontamination solution for each gram of HD. Allow 24 hours for decontamination to take place. Agitate solution at least one hour. Agitation is not necessary after the first hour. Test for presence of active chorine by use of acidic potassium iodide solution to give free iodine color. Adjust the resulting solution pH to between 10 and 11.

Place three millileters (ml) of decontaminated solution in a test tube. Add several crystals of potassium iodine and swirl to dissolve. Add 3 ml of 50 wt.% sulfuric acid: water and swirl. **Immediate** iodine color shows the presence of active chlorine. If negative, add additional decontaminate to the decontaminated solution, wait two hours and test again for active chlorine. This works for either 5.5% sodium hypochlorite or 10% calcium hypochlorite decontamination solutions. Scoop up all materials and clothing and place in an approved DOT container. The exterior of the container will be decontaminated and labeled according to EPA and DOT regulations. All leaking containers will be over packed with sorbent (e.g. vermiculite) placed between the interior and exterior containers. Decontaminate and label according to EPA and DOT regulations. Dispose of contents according to Federal, state and local regulations. Conduct general area monitoring with an approved monitor to confirm that the atmospheric concentrations do not exceed the airborne exposure limits (See Section VIII).

Note: Surfaces contaminated with HD, then rinsed and decontaminated may evolve sufficient HD vapor to produce a physiological response. HD on laboratory glassware may be oxidized by its vigorous reaction with concentrated nitric acid.

Waste Disposal Method: Open pit burning or burying of HD or items containing or contaminated with HD in any quantity is prohibited. Decontamination of waste or excess material shall be accomplished according to the procedures outlined above and can be destroyed by incineration in EPA approved incinerators according to appropriate provisions of Federal, State and local Resource Conservation Recovery Act (RCRA) regulations.

Note: Some decontaminate solutions are hazardous wastes according to RCRA regulations and must be disposed of according to those regulations.

Section VIII - Special Protection Information

Respiratory Protection:

Concentration	Respiratory Protective Equipment
< 0.003 mg/m^3	M40 protective mask and other air purifying respirator approved by ODAS for chemical agent operations.
>= 0.003 mg/m^3 At an 8-hr TWA	NIOSH/MSHA approved self-contained breathing apparatus or combination airline respirator with an auxiliary self-contained

1

breathing apparatus worn with encapsulating ensembles other than the DPE.

Ventilation

Local Exhaust: Mandatory. Must be filtered or scrubbed. Air emissions shall meet local, state and federal regulations.

Special: Chemical laboratory hoods will have an average inward face velocity of 100 linear feet per minute (lfpm) +/- 20% with the velocity at any point not deviating from the average face velocity by more than 20%. Existing laboratory hoods will have an inward face velocity of 150 lfpm +/- 20%. Laboratory hoods will be located such that cross drafts do not exceed 20% of the inward face velocity. A visual performance test using smoke producing devices will be performed in assessing the ability of the hood to contain agent HD.

Other: Recirculation of exhaust air from agent areas is prohibited. No connection between agent area and other areas through the ventilation system is permitted. Emergency backup power is necessary. Hoods should be tested semiannually or after modification or maintenance operations. Operations should be performed 20 centimeters inside hoods.

Protective Gloves: Butyl Rubber gloves M3 and M4
Norton, Chemical Protective Glove Set

Eye Protection: As a minimum, chemical goggles will be worn. For splash hazards use goggles and face shield.

Other Protective Equipment: For laboratory operations, wear lab coats, gloves and have mask readily accessible. In addition, daily clean smocks, foot covers, and head covers will be required when handling contaminated lab animals.

Monitoring: Available monitoring equipment for agent HD is the M8/M9 detector paper, blue band tube, M256/M256A1 kits, bubbler, Depot Area Air Monitoring System (DAAMS), Automated Continuous Air Monitoring System (ACAMS), CAM-M1, Hydrogen Flame Photometric Emission Detector (HYFED), the Miniature Chemical Agent Monitor (MINICAM), and Real Time Analytical Platform (RTAP). Real-time, low-level monitors (with alarm) are required for HD operations. In their absence, an Immediately Dangerous to Life and Health (IDLH) atmosphere must be presumed. Laboratory operations conducted in appropriately maintained and alarmed engineering controls require only periodic low-level monitoring.

Section IX - Special Precautions

Precautions To Be Taken In Handling and Storing: When handling agents, the buddy system will be incorporated. No smoking, eating, or drinking in areas containing agents is permitted. Containers should be periodically inspected for leaks, (either visually or using a detector kit). Stringent control over all personnel practices must be exercised. Decontaminating equipment will be conveniently located. Exits must be designed to permit rapid evacuation. Chemical showers, eyewash stations, and personal cleanliness facilities must be provided. Wash hands before meals and shower thoroughly with special attention given to hair, face, neck, and hands using plenty of soap and water before leaving at the end of the workday.

Other Precautions: HD should be stored in containers made of glass for Research, Development, Test and Evaluation (RDTE) quantities or one-ton steel containers for large quantities. Agent containers will be stored in a single containment system with in a laboratory hood or in double containment system.

For additional information see "AR 385-61, The Army Toxic Chemical Agent Safety Program," "DA Pam 385-61, Toxic Chemical Agent Safety Standards," and "DA Pam 40-173, Occupational Health Guidelines for the Evaluation and Control of Occupational Exposure to Mustard Agents H, HD, and HT."

1

Section X - Transportation Data

Note: Forbidden for transport other than via military (Technical Escort Unit) transport according to 49 CFR 172

Proper Shipping Name: Toxic liquids, n.o.s.

Dot Hazard Class: 6.1, Packing Group I, Hazard Zone B

Dot Label: Poison

Dot Marking: Toxic liquids, n.o.s. Bis- (2-chloroethyl) sulfide UN 2810, Inhalation Hazard

Dot Placard: Poison

Emergency Accident Precautions and Procedures: See Sections IV, VII and VIII.

Precautions To Be Taken In Transportation: Motor vehicles will be placarded regardless of quantity. Drivers will be given full information regarding shipment and conditions in case of an emergency. AR 50-6 deals specifically with the shipment of chemical agents. Shipment of agents will be escorted in accordance with AR 740-32.

The Edgewood Chemical Biological Center (ECBC), Department of the Army believes that the data contained herein are actual and are the results of the tests conducted by ECBC experts. The data are not to be taken as a warranty or representation for which the Department of the Army or ECBC assumes legal responsibility. They are offered solely for consideration. Any use of this data and information contained in this MSDS must be determined by the user to be in accordance with applicable Federal, State, and local laws and regulations.

Addendum A

Additional Information For Thickened HD

Trade Name And Synonyms: Thickened HD, THD

Trade Name and Synonyms for Thickener:
Acrylic acid butyl ester
Polymer with styrene
Butyl acrylate-styrene polymer
Butyl acrylate-styrene copolymer
N-Butyl acrylate-styrene polymer
Polymer with styrene acrylic acid butyl ester
2-Propenoic acid
Butyl ester
Polymer with ethenylbenzene
Styrene -butyl acrylate polymer
Acronal 4D
Acronal 290D
Acronal 295D
Acronal 320D
Mowilith DM60
Sokrate LX 75
OSH22097

Hazardous Ingredients: Styrene-butyl acrylate copolymer is used to thicken HD and is not known to be hazardous

1

except in a finely-divided, powder form.

Physical Data: Essentially the same as HD.

Fire And Explosion Data: Same as HD. Thickener is a slight fire hazard when exposed to heat or flame.

Health Hazard Data: Same as HD except for skin contact. For skin contact, don respiratory protective mask and remove contaminated clothing **Immediately. Immediately** scrape the HD from the skin surface, and then wash the contaminated surface with acetone. Seek medical attention **Immediately**.

Spill, Leak, and Disposal Procedures: If spills or leaks of HD occur, follow the same procedures as those for HD, but dissolve THD in acetone before introducing any decontaminating solution. Containment of THD is generally not necessary. Spilled THD can be carefully scraped off the contaminated surface and placed in a fully removable head drum with a high density, polyethylene lining. THD can then be decontaminated, after it has been dissolved in acetone, using the same procedures used for HD. Contaminated surfaces should be treated with acetone, then decontaminated using the same procedures as those used for HD.
Note: Surfaces contaminated with THD and then rinse-decontaminated may evolve sufficient HD vapor to produce a physiological response.

Special Protection Information: Same as HD.

Special Precautions: Same as HD with the following addition. Handling the THD requires careful observation of the "stringers" (elastic, thread like attachments) formed when the agents are transferred or dispensed. These stringers must be broken cleanly before moving the contaminating device or dispensing device to another location, or unwanted contamination of a working surface will result. Avoid contact with strong oxidizers, excessive heat, sparks, or open flame.

Transportation Data: Same as HD.

1

Material Safety Data Sheet

Lethal Nerve Agent (VX)

Date: 14 September 1988
Revised: 13 August 2003

In the event of an emergency
Telephone the RDECOM Operations
Center's 24-hour emergency
Number: 410-436-2148

Section I - General Information

Manufacturer's Address:
U.S. Army Research Development Engineering Command (RDECOM)
Edgewood Chemical Biological Center (ECBC)
ATTN: AMSRD-ECB-CB-CR
Aberdeen Proving Ground, MD 21010-5424

CAS Registry Numbers:
50782-69-9, 51848-47-6, 53800-40-1, 70938-84-0

Chemical Name:
O-ethyl S- [2-(diisoproylamino) ethyl] methylphosphonothiolate

Trade Name And Synonyms:
Phosphonothioic acid, methyl-, S- (2-bis (1-methylethylamino) ethyl) 0-ethyl ester
O-ethyl S- (2-diisopropylaminoethyl) methylphosphonothiolate
S-2-Diisopropylaminoethyl O-ethyl methylphosphonothioate
S-2 ((2-Diisopropylamino) ethyl) O-ethyl methylphosphonothiolate
O-ethyl S- (2-diisopropylaminoethyl) methylphosphonothioate
O-ethyl S- (2-diisopropylaminoethyl) methylthiolphosphonoate
S- (2-diisopropylaminoethyl) o-ethyl methyl phosphonothiolate
Ethyl-S-dimethylaminoethyl methylphosphonothiolate
VX
EA 1701
TX60

Chemical Family: Sulfonated organophosphorous compound

Formula/Chemical Structure:
$C_{11} H_{26} N O_2 P S$

1

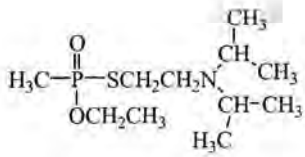

NFPA 704 Signal:

Health - 4
Flammability - 1
Reactivity - 1
Special - 0

Section II - Ingredients

Ingredients/Name: VX
Percentage by Weight: 100%
Threshold Limit Value (TLV): 0.00001mg/m^3

Section III - Physical Data

Boiling Point @ 760 mm Hg: 568 °F (298 °C)

Vapor Pressure: 0.00063 mm Hg @ 25 °C

Vapor Density (Air = 1 STP): 9.2 @ 25 °C

Solubility (g/100g solvent): 5.0 @ 21.5°C and 3.0 @ 25 °C in water. Soluble in organic solvents.

Specific Gravity (H_20=1g/mL): 1.0113 @ 25 °C

Freezing/Melting Point (°C): -50 °C

Liquid Density (g/mL): 1.0083 @ 25 °C

Volatility (mg/m^3): 8.9 @ 25 °C

Viscosity (CENTISTOKES): 9.958 @ 25 °C

Appearance and Odor: Colorless to straw colored liquid and odorless, similar in appearance to motor oil.

Section IV - Fire and Explosion Data

Flashpoint: 159 °C (McCutchan - Young)

1

Flammability Limits (% By Volume): Not Available

Lower Explosive Limit: Not Applicable

Upper Explosive Limit: Not Applicable

Extinguishing Media: Water mist, fog, foam, CO_2. Avoid using extinguishing methods that will cause splashing or spreading of the VX.

Special Fire Fighting Procedures: All persons not engaged in extinguishing the fire should be immediately evacuated from the area. Fires involving VX should be contained to prevent contamination to uncontrolled areas. When responding to a fire alarm in buildings or areas containing VX, fire-fighting personnel should wear full firefighter protective clothing during chemical agent fire-fighting and fire rescue operations. Respiratory protection is required. Positive pressure, full-face piece, NIOSH-approved self-contained breathing apparatus (SCBA) will be worn where there is danger of oxygen deficiency and when directed by the fire chief or chemical accident/incident (CAI) operations officer. In cases where firefighters are responding to a chemical accident/incident for rescue/reconnaissance purposes they will wear appropriate levels of protective clothing (See Section VIII).

Do not breathe fumes. Skin contact with nerve agents must be avoided at all times. Although the fire may destroy most of the agent, care must still be taken to assure the agent or contaminated liquids do not further contaminate other areas or sewers. Contact with liquid VX or vapors can be fatal.

Unusual Fire And Explosion Hazards: None known.

Section V - Health Hazard Data

Airborne Exposure Limits (AEL): The permissible airborne exposure concentration for VX for an 8-hour workday of a 40-hour workweek is an 8-hour time weighted average (TWA) of 0.00001 mg/m3. This value can be found in "DA Pam 40-8, Occupational Health Guidelines for the Evaluation and Control of Occupational Exposure to Nerve Agents GA, GB, GD, and VX." To date, however, the Occupational Safety and Health Administration (OSHA) have not promulgated a permissible exposure concentration for VX.

VX is not listed by the International Agency for Research on Cancer (IARC), American Conference of Governmental Industrial Hygienists (ACGIH), Occupational Safety and Health Administration (OSHA), or National Toxicology Program (NTP) as a carcinogen.

Effects Of Overexposure: VX is a lethal cholinesterase inhibitor. Doses which are potentially life threatening may be only slightly larger than those producing least effects. Death usually occurs within 15 minutes after absorption of a fatal dosage.

VX

Route	Form	Effect	Type	*Dosage
ocular	vapor	miosis	ECt50	0.09 mg-min/m^3
inhalation	vapor	runny nose	ECt50	0.09 mg-min/m^3
inhalation (15 l/min)	vapor	severe incapacitation	ICt50	25 mg-min/m^3
inhalation (15 l/min)	vapor	death	LCt50	30 mg-min/m^3
percutaneous	liquid	death	LD50	10 mg/70 kg man

1

*Effective dosages for vapor are estimated for exposure durations of 2-10 minutes.

Symptoms of overexposure may occur within minutes or hours, depending upon the dose. Early, mild signs and symptoms of vapor exposure might include: miosis (constriction of pupils) and visual effects (pain behind the eyes, dimness of vision, and/or blurred vision), runny nose and nasal congestion, excessive salivation, and tightness in the chest, with minimal bronchorrhea. Moderate nerve agent intoxication may include signs and symptoms of mild exposure, plus an increase in shortness of breath, with coughing, wheezing, or voluminous bronchorrhea, nausea, vomiting or diarrhea. Severe nerve agent intoxication may include the central nervous system and multiple organ systems. Severe nerve agent intoxication may include the signs and symptoms of moderate exposure, plus generalized weakness or fasciculation's/twitching, loss of consciousness (within seconds), convulsions (within minutes), severe respiratory distress, flaccid paralysis and apnea.

Exposures to liquid percutaneous nerve agents, such as with VX, are slower to develop and slower to reach their peak, compared to vapor exposures of the eyes or respiratory tract. This is because nerve agent uptake across the skin is slower than via inhalation, and continued absorption of agent through the various skin layers can occur, even hours after the skin surface has been decontaminated. Mild signs or symptoms of liquid nerve agent, such as VX, may include localized sweating at the site of exposure, along with fine muscle fasciculation's. (NOTE: Pinpoint pupils (miosis) are not an early sign of liquid skin exposure and may not be present at all in a mild or moderate liquid percutaneous exposure.) Moderate signs and symptoms may include those of mild vapor exposure, plus nausea, vomiting and/or diarrhea; headache; and a feeling of generalized weakness, but no respiratory signs or symptoms. Severe signs and symptoms of liquid nerve agent may include miosis, generalized fasciculation's and twitching, respiratory secretions, unconsciousness, convulsions, flaccid muscle paralysis and apnea.

Emergency And First Aid Procedures:

Inhalation: Leave area of contamination as quickly as possible. Hold breath until respiratory protective mask is donned. Remove clothing in a clean air environment and shampoo or rinse hair to prevent vapor off gassing. If severe signs of agent exposure appear (signs and symptoms of moderate exposure, plus generalized weakness or fasciculation's/twitching, loss of consciousness (within seconds), convulsions (within minutes), severe respiratory distress, flaccid paralysis and apnea), immediately administer, in rapid succession, all three sets of the Nerve Agent Antidote Kit ((Mark 1) kit contains 2mg atropine and 600mg pralidoxime chloride (2 PAM C1) auto-injectors). If experiencing most or all of the MILD symptoms of nerve agent poisoning, administer one set of the Nerve Agent Antidote Kit, (Mark I); if signs and symptoms are progressing, up to three sets of injections may be administered at 5 to 20 minute intervals; No more than three (3) injector sets will be given unless directed by medical personnel. In addition, a record will be maintained of all injections given. If breathing has stopped, give artificial respiration. Mouth-to-mouth resuscitation should be used when mask-bag or oxygen delivery systems are not available. Do not use mouth-to-mouth resuscitation when facial contamination exists. If breathing is difficult, administer oxygen. Seek medical attention **Immediately**.

Eye Contact: **Immediately** leave area of contamination and begin flushing eyes with sterile saline or water for 10-15 minutes, then don respiratory protective mask. Although miosis (pinpointing of the pupils) may be an early sign of agent exposure, an injection will not be administered when miosis is the only sign present. Instead, the individual will be taken **Immediately** to a medical treatment facility for observation.

Skin Contact: Don respiratory protective mask and remove contaminated clothing. Immediately wash contaminated skin with copious amounts of liquid soap and warm to hot water. The last wash should be a rinse with copious amounts of warm or hot water. Shampoo can be used to wash the hair. Administer nerve agent antidote kit, Mark I, only if local sweating and muscular twitching symptoms are observed. Seek medical attention **Immediately.**

Ingestion: Do not induce vomiting. First symptoms are likely to be gastrointestinal. **Immediately** administer Nerve Agent Antidote Kit, Mark I. Seek medical attention **Immediately.** **Do not handle vomited material to avoid further contamination.**

1

Section VI - Reactivity Data

Stability: Relatively stable at room temperature. Unstabilized VX of 95% purity decomposes at a rate of 5% a month at 71 °C.

Incompatibility: Negligible on brass, steel, and aluminum.

Hazardous Decomposition Products: During a basic hydrolysis of VX up to 10% of the agent is converted to diisopropylaminoethyl methylphosphonothioic acid (EA2192). Based on the concentration of EA2192 expected to be formed during hydrolysis and its toxicity (1.4 mg/kg dermal in rabbit at 24 hours in a 10/90 wt.% ethanol/water solution), a Class B poison would result. The large-scale decontamination procedure, which uses both HTH and NaOH, destroys VX by oxidation and hydrolysis. Typically the large-scale product contains 0.2 - 0.4 wt.% EA2192 at 24 hours. At pH 12, the EA2192 in the large-scale product has a half-life of about 14 days. Thus, the 90-day holding period at pH 12 results in about a 64-fold reduction of EA2192 (six half-lives). This holding period is sufficient to reduce the toxicity of the product below that of a Class B poison. Other less toxic products are ethyl methylphosphonic acid, methylphosphinic acid, diisopropyaminoethyl mercaptan, diethyl methylphosphonate, and ethanol. The small-scale decontamination procedure uses sufficient HTH to oxidize all VX thus no EA2192 is formed.

Hazardous Polymerization: Does not occur.

Section VII - Spill, Leak, And Disposal Procedures

Steps To Be Taken In Case Material Is Released Or Spilled: If leaks or spills of VX occur, only personnel in full protective clothing will remain in the area (See Section VIII). In case of personnel contamination see Section V for emergency and first aid instructions.

Recommended Field Procedures (For Quantities Greater Than 50 Grams):
NOTE: These procedures can only be used with the approval of the Risk Manager or qualified safety professionals. Spills must be contained by covering with vermiculite, diatomaceous earth, clay or fine sand. An alcoholic HTH mixture is prepared by adding 100 milliliters of denatured ethanol to a 900-milliliter slurry of 10% HTH in water. This mixture should be made just before use since the HTH can react with the ethanol. Fourteen grams of alcoholic HTH solution are used for each gram of VX. Agitate the decontamination mixture as the VX is added. Continue the agitation for a minimum of one hour. This reaction is reasonably exothermic and evolves substantial off gassing. The evolved reaction gases should be routed through a decontaminate filled scrubber before release through filtration systems. After completion of the one-hour minimum agitation, 10% sodium hydroxide is added in a quantity equal to that necessary to assure that a pH of 12.5 is maintained for a period not less than 24 hours. Hold the material at a pH between 10 and 12 for a period not less than 90 days to ensure that a hazardous intermediate material is not formed (See Section VI). Scoop up all material and place in a DOT approved container. Cover the contents with decontaminating solution consisting of an alcoholic HTH mixture of 100 milliliters of denatured ethanol to a 900 milliliter slurry of 10% HTH in water. After sealing, decontaminate the exterior container and labeled according to EPA and DOT regulations. All leaking containers will be over packed with sorbent (e.g. vermiculite) placed between the interior and exterior containers and labeled according to EPA and DOT regulations. Dispose of decontaminate according to Federal, state, and local laws. Conduct general area monitoring to confirm that the atmospheric concentrations do not exceed the airborne exposure limits (See Sections II and VIII).

Formatted

If the alcoholic HTH mixture is not available then the following decontaminants may be used instead and are listed in the order of preference: Decontaminating Agent (DS2), Supertropical Bleach Slurry (STB), and Sodium Hypochlorite.

Recommended Laboratory Procedures (For Quantities Less Than 50 Grams): If the active chlorine of the Calcium Hypochlorite (HTH) is at least 55%, then 80 grams of a 10% slurry are required for each gram of VX. Proportionally more HTH is required if the chlorine activity of the HTH is lower than 55%. The mixture is agitated as the VX is added and the agitation is maintained for a minimum of one hour. If phasing of the VX/decon solution continues after 5 minutes, an amount of denatured ethanol equal to a 10 wt.% of the total agent/decon will be added to help miscibility. Place all material in a DOT approved container and cover the contents with additional

1

decontaminating solution. After sealing, decontaminate the exterior of the container and label according to EPA and DOT regulations. All leaking containers will be over packed with sorbent placed between the interior and exterior containers and label according to EPA and DOT regulations. Dispose of according to Federal, State, and local laws. Conduct general area monitoring to confirm that the atmospheric concentrations do not exceed the airborne exposure limits (See Sections II and VIII).

Note: Ethanol Should Be Reduced To Prevent The Formation Of A Hazardous Waste.
Upon completion of the one hour agitation the decon mixture will be adjusted to a pH between 10 and 11. Conduct general area monitoring to confirm that the atmospheric concentrations do not exceed the airborne exposure limits (See Sections II and VIII).

Waste Disposal Method: Open pit burning or burying of VX or items containing or contaminated with VX in any quantity is prohibited. The detoxified VX (using procedures above) can be thermally destroyed by in an EPA approved incinerator according to appropriate provisions of Federal, State and/or local Resource Conservation and Recovery Act (RCRA) regulations.

Note: Some decontaminate solutions are hazardous waste according to RCRA regulations and must be disposed of according to those regulations.

Section VIII - Special Protection Information

Concentration	Respiratory Protective Equipment
<0.00001 mg/m^3	A full face piece, chemical canister air-purifying protective mask will be on hand for escape. M40-series masks are acceptable for this purpose. Other masks certified as equivalent may be used.
>0.00001 or = 0.02 mg/m^3	A NIOSH/MSHA approved pressure demand full face piece SCBA or supplied air respirators with escape air cylinder may be used. Alternatively, a full-face piece, chemical canister air-purifying protective mask is acceptable for this purpose (See DA Pam 385-61 for determination of appropriate level)
>0.02 mg/m^3	NIOSH/MSHA approved pressure demand full face piece SCBA or supplied air respirators with escape air cylinder suitable for use in high agent concentrations with protective ensemble. (See DA Pam 385-61 for examples)

Ventilation:

Local exhaust: Mandatory. Must be filtered or scrubbed to limit exit concentrations to < 0.00001 mg/m^3. Air emissions will meet local, state and federal regulations.

Special: Chemical laboratory hoods will have an average inward face velocity of 100 linear feet per minute (lfpm) +/- 20% with the velocity at any point not deviating from the average face velocity by more than 20%. Existing laboratory hoods will have an inward face velocity of 150 lfpm +/- 20%. Laboratory hoods will be located such that cross-drafts do not exceed 20% of the inward face velocity. A visual performance test using smoke-producing

1

devices will be performed in assessing the ability of the hood to contain agent VX.

Other: Recirculation or exhaust air from chemical areas is prohibited. No connection between chemical areas and other areas through ventilation system is permitted. Emergency backup power is necessary. Hoods should be tested at least semiannually or after modification or maintenance operations. Operations should be performed 20 centimeters inside hood face.

Protective Gloves: Butyl Rubber Glove M3 and M4
Norton, Chemical Protective Glove Set

Eye Protection: At a minimum chemical goggles will be worn. For splash hazards use goggles and face shield.

Other Protective Equipment: For laboratory operations, wear lab coats, gloves and have mask readily accessible. In addition, daily clean smocks, foot covers, and head covers will be required when handling contaminated lab animals.

Monitoring: Available monitoring equipment for agent VX is the M8/M9 detector paper, detector ticket, M256/M256A1 kits, bubbler, Depot Area Air Monitoring System (DAAMS), Automated Continuous Air Monitoring System (ACAMS), Real-Time Monitor (RTM), Demilitarization Chemical Agent Concentrator (DCAC), M8/M43, M8A1/M43A1, CAM-M1, Hydrogen Flame Photometric Emission Detector (HYFED), the Miniature Chemical Agent Monitor (MINICAM), and the Real Time Analytical Platform (RTAP).

Real-time, low-level monitors (with alarm) are required for VX operations. In their absence, an Immediately Dangerous to Life and Health (IDLH) atmosphere must be presumed. Laboratory operations conducted in appropriately maintained and alarmed engineering controls require only periodic low-level monitoring.

Section IX - Special Precautions

Precautions To Be Taken In Handling and Storing: When handling agents, the buddy system will be incorporated. No smoking, eating, or drinking in areas containing agents is permitted. Containers should be periodically inspected for leaks, (either visually or using a detector kit). Stringent control over all personnel practices must be exercised. Decontaminating equipment will be conveniently located. Exits must be designed to permit rapid evacuation. Chemical showers, eyewash stations, and personal cleanliness facilities must be provided. Wash hands before meals and shower thoroughly before leaving at the end of the workday with special attention given to hair, face, neck, and hands using plenty of soap and water.

Other Precautions: Agent containers will be stored in a double containment system within a laboratory hood.

For additional information see "AR 385-61, The Army Toxic Chemical Agent Safety Program," "DA Pam 385-61, Toxic Chemical Agent Safety Standards," and "DA Pam 40-8, Occupational Health Guidelines for the Evaluation and Control of Occupational Exposure to Nerve Agents GA, GB, GD, and VX."

Section X - Transportation Data

Note: Forbidden for transport other than via military (Technical Escort Unit) transport according to 49 CFR 172

Proper Shipping Name: Toxic liquids, organic, n.o.s.

Dot Hazard Class: 6.1, Packing Group I, Hazard Zone A

Dot Label: Poison

Dot Marking:
Toxic liquids, organic, n.o.s. (O-ethyl-S-(2-diisopropylaminoethyl) methyl phosphonothiolate) UN 2810, Inhalation

1

Hazard

Dot Placard: Poison

Emergency Accident Precautions And Procedures: See Sections IV, VII and VIII.

Precautions To Be Taken In Transportation: Motor vehicles will be placarded regardless of quantity. Drivers will be given full information regarding shipment and conditions in case of an emergency. AR 50-6 deals specifically with the shipment of chemical agents. Shipment of agents will be escorted in accordance with AR 740-32.

The Edgewood Chemical Biological Center (ECBC), Department of the Army believes that the data contained herein are actual and are the results of the tests conducted by ECBC experts. The data is not to be taken as a warranty or representation for which the Department of the Army or ECBC assumes legal responsibility. This information is offered solely for consideration. Any use of this data and information contained in this MSDS must be determined by the user to be in accordance with applicable Federal, State, and local laws and regulations.

1

Material Safety Data Sheet

Lethal Nerve Agent (GB)

Date: 14 September 1988
Revised: 13 August 2003

In the event of an emergency
Telephone the RDECOM Operations
Center's 24-hour emergency
Number: 410-436-2148

Section I - General Information

Manufacturer's Address:
U.S. Army Research Development Engineering Command (RDECOM)
Edgewood Chemical Biological Center (ECBC)
ATTN: AMSRD-ECB-CB-CR
Aberdeen Proving Ground, MD 21010-5424

CAS Registry Numbers:
107-44-8, 50642-23-4

Chemical Name:
Isopropyl methylphosphonofluoridate

Alternate Chemical Names:
O-Isopropyl Methylphosphonofluoridate
Phosphonofluoridic acid, methyl-, isopropyl ester
Phosphonofluoridic acid, methyl-, 1-methylethyl ester

Trade Name and Synonyms:
Isopropyl ester of methylphosphonofluoridic acid
Methylisopropoxyfluorophosphine oxide
Isopropyl Methylfluorophosphonate
O-Isopropyl Methylisopropoxfluorophosphine oxide
Methylfluorophosphonic acid, isopropyl ester
Isopropoxymethylphosphonyl fluoride
Isopropyl methylfluorophosphate
Isopropoxymethylphosphoryl fluoride
GB
Sarin
Sarin

Chemical Family: Fluorinated organophosphorous compound

Formula/Chemical Structure:
$C_4 H_{10} F O_2 P$

1

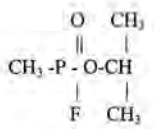

NFPA 704 Signal:

Health - 4
Flammability - 1
Reactivity - 1
Special - 0

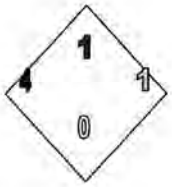

Section II - Ingredients

Ingredients/Name: GB
Percentage by Weight: 100%
Threshold Limit Value (TLV): 0.0001 mg/m^3

Section III - Physical Data

Boiling Point @ 760 mm Hg: 316 °F (158 °C)

Vapor Pressure (mm Hg): 2.9 @ 25 °C

Vapor Density (Air = 1 STP): 4.83 @ 25 °C

Solubility: Miscible with water. Soluble in all organic solvents.

Specific Gravity (H_20=1g/mL): 1.0919 @ 25 °C

Freezing/Melting Point (°C): -56 °C

Liquid Density (g/cc): 1.0887 @ 25 °C
1.102 @ 20 °C

Volatility (mg/m^3): 22,000 @ 25 °C

Viscosity (CENTISTOKES): 1.283 @ 25 °C

Appearance and Odor: Colorless liquid. Odorless in pure form.

Section IV - Fire and Explosion Data

Flashpoint: Did not flash to 280 °F (McCutchan - Young)

Flammability Limits (% By Volume): Not Applicable
Lower Explosive Limit: Not Applicable

Upper Explosive Limit: Not Applicable

Extinguishing Media: Water mist, fog, foam, CO_2. Avoid using extinguishing methods that will cause splashing or

1

spreading of the GB.

Special Fire Fighting Procedures: All persons not engaged in extinguishing the fire should be immediately evacuated from the area. Fires involving GB should be contained to prevent contamination to uncontrolled areas. GB will react with steam or water to produce toxic and corrosive vapors. When responding to a fire alarm in buildings or areas containing GB, fire-fighting personnel should wear full firefighter protective clothing during chemical agent firefighting and fire rescue operations. Respiratory protection is required. Positive pressure, full-face piece, NIOSH-approved self-contained breathing apparatus (SCBA) will be worn where there is danger of oxygen deficiency and when directed by the fire chief or chemical accident/incident (CAI) operations officer. In cases where firefighters are responding to a chemical accident/incident for rescue/reconnaissance purposes they will wear appropriate levels of protective clothing (See Section VIII).

Do not breathe fumes. Skin contact with nerve agents must be avoided at all times. Although the fire may destroy most of the agent, care must still be taken to assure the agent or contaminated liquids do not further contaminate other areas or sewers. Contact with liquid GB or vapors can be fatal.

Unusual Fire and Explosion Hazards: Hydrogen may be present.

Section V - Health Hazard Data

Airborne Exposure Limits (AEL): The permissible airborne exposure concentration for GB for an 8-hour workday of a 40-hour workweek is an 8-hour time weighted average (TWA) of 0.0001 mg/m^3. This value can be found in "DA Pam 40-8,Occupational Health Guidelines for the Evaluation and Control of Occupational Exposure to Nerve Agents GA, GB, GD, and VX." To date, however, the Occupational Safety and Health Administration (OSHA) have not promulgated a permissible exposure concentration for GB.

GB is not listed by the International Agency for Research on Cancer (IARC), American Conference of Governmental Industrial Hygienists (ACGIH), Occupational Safety and Health Administration (OSHA), or National Toxicology Program (NTP) as a carcinogen.

Effects of Overexposure: GB is a lethal cholinesterase inhibitor. Doses which are potentially life threatening may be only slightly larger than those producing least effects.

GB

Route	Form	Effect	Type	*Dosage
ocular	vapor	miosis	ECt50	<2 mg-min/m^3
inhalation (15 l/min)	vapor	severe incapacitation	ICt50	35 mg-min/m^3
inhalation (15 l/min)	vapor	death	LCt50	70 mg-min/m^3
percutaneous liquid	death	LD50	1700 mg/70 kg man	

*Effective dosages for vapor are estimated for exposure durations of 2-10 minutes.

Symptoms of overexposure may occur within minutes or hours, depending upon the dose. Early, mild signs and symptoms of vapor exposure might include: miosis (constriction of pupils) and visual effects (pain behind the eyes, dimness of vision, and/or blurred vision), runny nose and nasal congestion, excessive salivation, and tightness in the chest, with minimal bronchorrhea. Moderate nerve agent intoxication may include signs and symptoms of mild exposure, plus an increase in shortness of breath, with coughing, wheezing, or voluminous bronchorrhea, nausea, vomiting or diarrhea. Severe nerve agent intoxication may include the signs and symptoms of moderate exposure,

1

plus generalized weakness or fasciculation's/twitching, loss of consciousness (within seconds), convulsions (within minutes), severe respiratory distress, flaccid paralysis and apnea.

Exposures to liquid percutaneous nerve agents, such as with VX, are slower to develop and slower to reach their peak, compared to vapor exposures of the eyes or respiratory tract. This is because nerve agent uptake across the skin is slower than via inhalation, and continued absorption of agent through the various skin layers can occur, even hours after the skin surface has been decontaminated. Mild signs or symptoms of liquid nerve agent, such as VX, may include localized sweating at the site of exposure, along with fine muscle fasciculation's. (NOTE: Pinpoint pupils (miosis) are not an early sign of liquid skin exposure and may not be present at all in a mild or moderate liquid percutaneous exposure.) Moderate signs and symptoms may include those of mild vapor exposure, plus nausea, vomiting and/or diarrhea; headache; and a feeling of generalized weakness, but no respiratory signs or symptoms. Severe signs and symptoms of liquid nerve agent may include miosis, generalized fasciculation's and twitching, respiratory secretions, unconsciousness, convulsions, flaccid muscle paralysis and apnea.

Emergency and First Aid Procedures:

Inhalation:
Leave area of contamination as quickly as possible. Hold breath until respiratory protective mask is donned. Remove clothing in a clean air environment and shampoo or rinse hair to prevent vapor off gassing. If severe signs of agent exposure appear (signs and symptoms of moderate exposure, plus generalized weakness or fasciculation's/twitching, loss of consciousness (within seconds), convulsions (within minutes), severe respiratory distress, flaccid paralysis and apnea), immediately administer, in rapid succession, all three sets of the Nerve Agent Antidote Kit ((Mark 1) kit contains 2mg atropine and 600mg pralidoxime chloride (2 PAM C1) auto-injectors). If experiencing most or all of the MILD symptoms of nerve agent poisoning, administer one set of the Nerve Agent Antidote Kit, (Mark I); if signs and symptoms are progressing, up to three sets of injections may be administered at 5 to 20 minute intervals; no more than three (3) injector sets will be given unless directed by medical personnel. In addition, a record will be maintained of all injections given. If breathing has stopped, give artificial respiration. Mouth-to-mouth resuscitation should be used when mask-bag or oxygen delivery systems are not available. Do not use mouth-to-mouth resuscitation when facial contamination exists. If breathing is difficult, administer oxygen. Seek medical attention **Immediately**.

Eye Contact: Immediately leave area of contamination and begin flushing eyes with sterile saline or water for 10-15 minutes, then don respiratory protective mask. Although miosis (pinpointing of the pupils) may be an early sign of agent exposure, an injection will not be administered when miosis is the only sign present. Instead, the individual will be taken **Immediately** to a medical treatment facility for observation.

Skin Contact: Don respiratory protective mask and remove contaminated clothing. Immediately wash contaminated skin with copious amounts of liquid soap and warm to hot water. The last wash should be a rinse with copious amounts of warm or hot water. Shampoo can be used to wash the hair. Administer nerve agent antidote kit, Mark I, only if local sweating and muscular twitching symptoms are observed. Seek medical attention **Immediately.**

Ingestion: Do not induce vomiting. First symptoms are likely to be gastrointestinal. **Immediately** administer Nerve Agent Antidote Kit, Mark I. Seek medical attention **Immediately. Do not handle vomited material to avoid further contamination**

Section VI - Reactivity Data

Stability: Stable when pure. Plant grade material stabilized with tri-n-butylamine can be stored in steel containers for long periods of time at temperatures up to
70 °C, but unstabilized material tends to build-up pressure within a few weeks.

Incompatibility: Attacks tin, magnesium, cadmium-plated steel, and some aluminum. Slightly attacks copper, brass, and lead; practically no attack on 1020 steels, Inconel & K-monel.

1

Hazardous Decomposition Products: Hydrolyzes to form HF under acid conditions and isopropyl alcohol and polymers under basic conditions.

Hazardous Polymerization: Does not occur.

Section VII - Spill, Leak, And Disposal Procedures

Steps To Be Taken In Case Material Is Released Or Spilled: If leaks or spills of GB occur, only personnel in full protective clothing will remain in the area (See Section VIII). In case of personnel contamination see Section V for emergency and first aid instructions.

Recommended Field Procedures: NOTE: These procedures can only be used with the approval of the Risk Manager or qualified safety professionals. Spills must be contained by covering with vermiculite, diatomaceous earth, clay, fine sand, sponges, and paper or cloth towels. Decontaminate with copious amounts of aqueous sodium hydroxide solution (a minimum 10 wt.%). Scoop up all material and place in a DOT approved container. Cover the contents with decontaminating solution consisting of aqueous sodium hydroxide solution (a minimum 10 wt.%). After sealing, decontaminate the exterior container and labeled according to EPA and DOT regulations. All leaking containers will be over packed with sorbent (e.g. vermiculite) placed between the interior and exterior containers. Decontaminate and label according to EPA and DOT regulations. Dispose of decontaminate according to Federal, state, and local laws. Conduct general area monitoring to confirm that the atmospheric concentrations do not exceed the airborne exposure limits (See Sections II and VIII).

If 10 wt.% aqueous sodium hydroxide is not available then the following decontaminants may be used instead and are listed in the order of preference: Decontaminating Agent (DS2), Sodium Carbonate, and Super tropical Bleach Slurry (STB)

Recommended Laboratory Procedures: A minimum of 56 grams of decon solution is required for each gram of GB. Decontaminant and agent solution is allowed to agitate for a minimum of one hour. Agitation is not necessary following the first hour. At the end of one hour, the resulting solution should be adjusted to a pH greater than 11.5. If the pH is below 11.5 NaOH should be added until a pH above 11.5 can be maintained for 60 minutes. An alternate solution for the decontamination of GB is 10 wt.% sodium carbonate in place of the 10% sodium hydroxide solution above. Continue with 56 grams of decon for each gram of agent. Agitate for one hour but allow three hours for the reaction. The final pH should be adjusted to above zero. It is also permitted to substitute 5.25% sodium hypochlorite or 25 wt.% Monoethylamine (MEA) for the 10% sodium hydroxide solution. MEA must be completely dissolved in water before addition of the agent. Continue with 56 grams of decon for each gram of GB and provide agitation for one hour. Continue with same ratios and time stipulations. Scoop up all material and clothing. Place all material in a DOT approved container. Cover the contents with decontaminating solution as above. After sealing, decontaminate the exterior of the container and label according to EPA and DOT regulations. All leaking containers will be over packed with sorbent placed between the interior and exterior containers. Decontaminate and label according to EPA and DOT regulations. Dispose of decontaminate according to Federal, State, and local laws. Conduct general area monitoring to confirm that the atmospheric concentrations do not exceed the airborne exposure limits (See Sections II and VIII).

Waste Disposal Method: Open pit burning or burying of GB or items containing or contaminated with GB in any quantity is prohibited. The detoxified GB (using procedures above) can be thermally destroyed by incineration in EPA approved incinerators according to appropriate provisions of Federal, state and local Resource Conservation and Recovery Act (RCRA) Regulations.

Note: Some decontaminate solutions are hazardous wastes according to RCRA regulations and must be disposed of according to those regulations.

1

Section VIII - Special Protection Information

Concentration	Respiratory Protective Equipment
<0.0001 mg/m^3	A full face piece, chemical canister air-purifying protective mask will be on hand for escape. M40-series masks are acceptable for this purpose. Other masks certified as equivalent may be used.
>0.0001 or = 0.2 mg/m^3	A NIOSH/MSHA approved pressure demand full face piece SCBA or supplied air respirators with escape air cylinder may be used. Alternatively, a full-face piece, chemical canister air-purifying protective mask is acceptable for this purpose. (See DA Pam 385-61 for determination of appropriate level.)
>0.2 mg/m^3	NIOSH/MSHA approved pressure demand full face piece SCBA or supplied air respirators with escape air cylinder suitable for use in high agent concentrations. (See DA Pam 385-61 for examples)

Ventilation:

Local exhaust: Mandatory. Must be filtered or scrubbed to limit exit concentrations to < 0.0001 mg/m^3. Air emissions will meet local, state and federal regulations.

Special: Chemical laboratory hoods will have an average inward face velocity of 100 linear feet per minute (lfpm) +/- 20% with the velocity at any point not deviating from the average face velocity by more than 20%. Existing laboratory hoods will have an inward face velocity of 150 lfpm +/- 20%. Laboratory hoods will be located such that cross-drafts do not exceed 20% of the inward face velocity. A visual performance test using smoke-producing devices will be performed in assessing the ability of the hood to contain agent GB.

Other: Recirculation or exhaust air from chemical areas is prohibited. No connection between chemical areas and other areas through ventilation system is permitted. Emergency backup power is necessary. Hoods should be tested at least semiannually or after modification or maintenance operations. Operations should be performed 20 centimeters inside hood face.

Protective Gloves: Butyl Rubber Glove M3 and M4
Norton, Chemical Protective Glove Set

Eye Protection: At a minimum chemical goggles will be worn. For splash hazards use goggles and face shield.

Other Protective Equipment: For laboratory operations, wear lab coats, gloves and have mask readily accessible. In addition, daily clean smocks, foot covers, and head covers will be required when handling contaminated lab animals.

Monitoring: Available monitoring equipment for agent GB is the M8/M9 detector paper, detector ticket, M256/M256A1 kits, bubbler, Depot Area Air Monitoring System (DAAMS), Automated Continuous Air Monitoring System (ACAMS), Real-Time Monitor (RTM), Demilitarization Chemical Agent Concentrator (DCAC), M8/M43, M8A1/M43A1, CAM-M1, Hydrogen Flame Photometric Emission Detector (HYFED), the Miniature Chemical Agent Monitor (MINICAM), and the Real Time Analytical Platform (RTAP).

1

Real-time, low-level monitors (with alarm) are required for GB operations. In their absence, an Immediately Dangerous to Life and Health (IDLH) atmosphere must be presumed. Laboratory operations conducted in appropriately maintained and alarmed engineering controls require only periodic low-level monitoring.

Section IX - Special Precautions

Precautions To Be Taken In Handling And Storing: When handling agents, the buddy system will be incorporated. No smoking, eating, or drinking in areas containing agents is permitted. Containers should be periodically inspected for leaks, (either visually or using a detector kit). Stringent control over all personnel practices must be exercised. Decontaminating equipment will be conveniently located. Exits must be designed to permit rapid evacuation. Chemical showers, eyewash stations, and personal cleanliness facilities must be provided. Wash hands before meals and shower thoroughly with special attention given to hair, face, neck, and hands using plenty of soap and water before leaving at the end of the workday.

Other Precautions: Agent containers will be stored in a single containment system within a laboratory hood or in a double containment system.

For additional information see "AR 385-61, The Army Toxic Chemical Agent Safety Program," "DA Pam 385-61, Toxic Chemical Agent Safety Standards," and "DA Pam 40-173, Occupational Health Guidelines for the Evaluation and Control of Occupational Exposure to Nerve Agents GA, GB, GD, and VX."

Section X - Transportation Data

Note: Forbidden for transport other than via military (Technical Escort Unit) transport according to 49 CFR 172

Proper Shipping Name: Toxic liquids, organic, n.o.s.

Dot Hazard Class: 6.1, Packing Group I, Hazard Zone A

Dot Label: Poison

Dot Marking:
Toxic liquids, organic, n.o.s. (Isopropyl methylphosphonofluoridate) UN 2810, Inhalation Hazard

Dot Placard: Poison

Emergency Accident Precautions And Procedures: See Sections IV, VII and VIII.

Precautions To Be Taken In Transportation: Motor vehicles will be placarded regardless of quantity. Drivers will be given full information regarding shipment and conditions in case of an emergency. AR 50-6 deals specifically with the shipment of chemical agents. Shipment of agents will be escorted in accordance with AR 740-32.

The Edgewood Chemical Biological Center (ECBC), Department of the Army believes that the data contained herein are actual and are the results of the tests conducted by ECBC experts. The data are not to be taken as a warranty or representation for which the Department of the Army or ECBC assumes legal responsibility. They are offered solely for consideration. Any use of this data and information contained in this MSDS must be determined by the user to be in accordance with applicable Federal, State, and local laws and regulations.

1

CORNELL

Material Safety Data Sheets

Division of Facilities Services

DOD Hazardous Material Information (ANSI Format)
For Cornell University Convenience Only

RDX(CYCLONITE)

Section 1 - Product and Company Identification	Section 9 - Physical & Chemical Properties
Section 2 - Compositon/Information on Ingredients	Section 10 - Stability & Reactivity Data
Section 3 - Hazards Identification Including Emergency Overview	Section 11 - Toxicological Information
Section 4 - First Aid Measures	Section 12 - Ecological Information
Section 5 - Fire Fighting Measures	Section 13 - Disposal Considerations
Section 6 - Accidental Release Measures	Section 14 - MSDS Transport Information
Section 7 - Handling and Storage	Section 15 - Regulatory Information
Section 8 - Exposure Controls & Personal Protection	Section 16 - Other Information

The information in this document is compiled from information maintained by the United States Department of Defense (DOD). Anyone using this information is solely reponsible for the accuracy and applicability of this information to a particular use or situation.
Cornell University does not in any way warrant or imply the applicability, viability or use of this information to any person or for use in any situation.

Section 1 - Product and Company Identification
RDX(CYCLONITE)

Product Identification: RDX(CYCLONITE)
Date of MSDS: 01/01/1985 **Technical Review Date:** 01/05/1982
FSC: 6850 **NIIN: LIIN:** 00D000069
Submitter: D DG
Status Code: C
MFN: 01
Article: N
Kit Part: N

Manufacturer's Information

Manufacturer's Name: CONSOLIDATED CONTROLS CORP.
Manufacturer's Address1:
Manufacturer's Address2: N/P, NK 00000
Manufacturer's Country: NK
General Information Telephone:
Emergency Telephone: 213-772-5301
Emergency Telephone: 213-772-5301
MSDS Preparer's Name: N/P
Proprietary: N
Reviewed: Y
Published: Y
CAGE: 09790
Special Project Code: N

Contractor Information

Contractor's Name: CONSOLIDATED CONTROLS CORPORATION
Contractor's Address1: UNKNOWN
Contractor's Address2: UNKNOWN, NK 00000
Contractor's Telephone: UNKNOWN
Contractor's CAGE: 09790

Section 2 - Compositon/Information on Ingredients
RDX(CYCLONITE)

Ingredient Name: CYCLONITE
Ingredient CAS Number: 121-82-4 **Ingredient CAS Code:** M
RTECS Number: XY9450000 **RTECS Code:** M
=WT: =WT Code:
=Volume: =Volume Code:
>WT: >WT Code:
>Volume: >Volume Code:
<WT: <WT Code:
<Volume: <Volume Code:
% Low WT: % Low WT Code:
% High WT: % High WT Code:
% Low Volume: % Low Volume Code:
% High Volume: % High Volume Code:
% Text: 100.
% Enviromental Weight:
Other REC Limits: N/P
OSHA PEL: S, 1.5 MG/M3 **OSHA PEL Code:** M
OSHA STEL: OSHA STEL Code:
ACGIH TLV: S, 1.5MG/M3; 9192 **ACGIH TLV Code:** M
ACGIH STEL: N/P **ACGIH STEL Code:**
EPA Reporting Quantity:
DOT Reporting Quantity:
Ozone Depleting Chemical: N

Section 3 - Hazards Identification, Including Emergency Overview
RDX(CYCLONITE)

Health Hazards Acute & Chronic: N/P

Signs & Symptoms of Overexposure:
N/A

Medical Conditions Aggravated by Exposure:
N/P

LD50 LC50 Mixture: N/P

Route of Entry Indicators:
Inhalation: N/P
Skin: N/P
Ingestion: N/P

Carcenogenicity Indicators
NTP: N/P
IARC: N/P
OSHA: N/P

Carcinogenicity Explanation: N/P

Section 4 - First Aid Measures
RDX(CYCLONITE)

First Aid:
N/A

Section 5 - Fire Fighting Measures
RDX(CYCLONITE)

Fire Fighting Procedures:
ISOLATION
Unusual Fire or Explosion Hazard:
N/A
Extinguishing Media:
N/A
Flash Point: Flash Point Text: N/A

Autoignition Temperature:
Autoignition Temperature Text: N/A
Lower Limit(s): 400F
Upper Limit(s): N/A

Section 6 - Accidental Release Measures
RDX(CYCLONITE)

Spill Release Procedures:
NO

Section 7 - Handling and Storage
RDX(CYCLONITE)

Handling and Storage Precautions:

Other Precautions:

Section 8 - Exposure Controls & Personal Protection
RDX(CYCLONITE)

Repiratory Protection:
N/A
Ventilation:
N/P
Protective Gloves:
N/P
Eye Protection: N/P
Other Protective Equipment: N/P
Work Hygenic Practices: N/P
Supplemental Health & Safety Information: ITEM IS A 1.5 GRAM EXPLOSIVE IS CONTAINED IN AN ASSEMBLY P/N 200WSS-6

Section 9 - Physical & Chemical Properties
RDX(CYCLONITE)

HCC: E2
NRC/State License Number:
Net Property Weight for Ammo:
Boiling Point: Boiling Point Text: N/A
Melting/Freezing Point: Melting/Freezing Text: N/A
Decomposition Point: Decomposition Text: N/A
Vapor Pressure: N **Vapor Density:** N/A
Percent Volatile Organic Content:
Specific Gravity: N/A
Volatile Organic Content Pounds per Gallon:
pH: N/P
Volatile Organic Content Grams per Liter:
Viscosity: N/P
Evaporation Weight and Reference: N/A
Solubility in Water: N/A
Appearance and Odor: SOLID 1.5 GM EXPLOSIVE
Percent Volatiles by Volume: N/A
Corrosion Rate: N/P

Section 10 - Stability & Reactivity Data
RDX(CYCLONITE)

Stability Indicator: YES
Materials to Avoid:
N/A
Stability Condition to Avoid:
UNIT CAN ONLY BE IGNITED BY APPLICATION OF 4 AMPS DC TO CIRS
Hazardous Decomposition Products:
N/A
Hazardous Polymerization Indicator: NO
Conditions to Avoid Polymerization:
NONE

Section 11 - Toxicological Information
RDX(CYCLONITE)

Toxicological Information:
N/P

Section 12 - Ecological Information
RDX(CYCLONITE)

Ecological Information:
N/P

Section 13 - Disposal Considerations
RDX(CYCLONITE)

Waste Disposal Methods:
N/A

Section 14 - MSDS Transport Information
RDX(CYCLONITE)

Transport Information:
N/P

Section 15 - Regulatory Information
RDX(CYCLONITE)

SARA Title III Information:
N/P
Federal Regulatory Information:
N/P
State Regulatory Information:
N/P

Section 16 - Other Information
RDX(CYCLONITE)

Other Information:
N/P

HMIS Transportation Information

Product Identification: RDX(CYCLONITE)

Transporation ID Number: 435
Responsible Party CAGE: 09790
Date MSDS Prepared: 01/01/1985
Date MSDS Reviewed: 01/05/1982
MFN: 01/05/1982
Submitter: D DG
Status Code: C

Container Information
Unit of Issue: NK
Container Quantity: NK
Type of Container:
Net Unit Weight:

Article without MSDS: N
Technical Entry NOS Shipping Number: NOT ACCEPTABLE FOR SHIPMENT
Radioactivity:
Form:
Net Explosive Weight:
Coast Guard Ammunition Code:
Magnetism: N/P
AF MMAC Code:
DOD Exemption Number:
Limited Quantity Indicator:
Multiple Kit Number: 0
Kit Indicator: N
Kit Part Indicator: N
Review Indicator: Y
Additional Data:

Department of Transportation Information

DOT Proper Shipping Name: CYCLOTRIMETHYLENETRINITRAMINE, WETTED OR CYCLONITE, WETTED OR HEXOGEN, WETTED OR RDX, WETTED
DOT PSN Code: EET
Symbols:
DOT PSN Modifier: WITH NOT LESS THAN 15 PER CENT WATER BY MASS.
Hazard Class: 1.1D
UN ID Number: UN0072
DOT Packaging Group: II
Label: EXPLOSIVE 1.1D
Special Provision(s):
Packaging Exception:
Non Bulk Packaging: 62
Bulk Packaging: NONE
Maximimum Quanity in Passenger Area: FORBIDDEN
Maximimum Quanity in Cargo Area: FORBIDDEN
Stow in Vessel Requirements: B
Requirements Water/Sp/Other: 1E,5E

IMO Detail Information

IMO Proper Shipping Name: CYCLONITE, WETTED

IMO PSN Code: EYX
IMO PSN Modifier: WITH NOT LESS THAN 15% WATER, BY MASS
IMDG Page Number: 1106
UN Number: 0072
UN Hazard Class: 1.1 D
IMO Packaging Group: -
Subsidiary Risk Label: -
EMS Number: 1-01
Medical First Aid Guide Number: 235

IATA Detail Information

IATA Proper Shipping Name: FORBIDDEN BY THIS MODE OF TRANSPORTATION
IATA PSN Code: ZZY
IATA PSN Modifier:
IATA UN Id Number: N/R
IATA UN Class: N/R
Subsidiary Risk Class: N/R
UN Packaging Group: N/R
IATA Label: N/R
Packaging Note for Passengers: N/R
Maximum Quantity for Passengers: N/R
Packaging Note for Cargo: N/R
Maximum Quantity for Cargo: N/R
Exceptions: N/R

AFI Detail Information

AFI Proper Shipping Name: CYCLOTRIMETHYLENETRINITRAMINE, CYCLONITE, HEXOGEN, RDX, WETTED
AFI Symbols:
AFI PSN Code: IBK
AFI PSN Modifier: ,WITH NOT LESS THAN 15% WATER, BY MASS
AFI UN Id Number: UN0072
AFI Hazard Class: 1.1D
AFI Packing Group: II
AFI Label:
Special Provisions: P4
Back Pack Reference: A5.37

HAZCOM Label Information

Product Identification: RDX(CYCLONITE)
CAGE: 09790
Assigned Individual: N
Company Name: CONSOLIDATED CONTROLS CORPORATION
Company PO Box:
Company Street Address1: UNKNOWN
Company Street Address2: UNKNOWN, NK 00000 NK
Health Emergency Telephone: 213-772-5301
Label Required Indicator: Y
Date Label Reviewed: 12/16/1998
Status Code: C
Manufacturer's Label Number:
Date of Label: 12/16/1998
Year Procured: N/K
Organization Code: G

Chronic Hazard Indicator: N/P
Eye Protection Indicator: N/P
Skin Protection Indicator: N/P
Respiratory Protection Indicator: N/P
Signal Word: N/P
Health Hazard:
Contact Hazard:
Fire Hazard:
Reactivity Hazard:

8/8/2002 7:16:49 AM

Chronic Hazard Indicator: N/P
Eye Protection Indicator: N/P
Skin Protection Indicator: N/P
Respiratory Protection Indicator: N/P
Signal Word: N/P
Health Hazard:
Contact Hazard:
Fire Hazard:
Reactivity Hazard:

8/8/2002 7:16:49 AM

CORNELL

Material Safety Data Sheets

Division of Facilities Services

DOD Hazardous Material Information (ANSI Format) For Cornell University Convenience Only

TRINITROTOLUENE (TNT) TYPE 1 FLAKE FORM

Section 1 - Product and Company Identification	Section 9 - Physical & Chemical Properties
Section 2 - Compositon/Information on Ingredients	Section 10 - Stability & Reactivity Data
Section 3 - Hazards Identification Including Emergency Overview	Section 11 - Toxicological Information
Section 4 - First Aid Measures	Section 12 - Ecological Information
Section 5 - Fire Fighting Measures	Section 13 - Disposal Considerations
Section 6 - Accidental Release Measures	Section 14 - MSDS Transport Information
Section 7 - Handling and Storage	Section 15 - Regulatory Information
Section 8 - Exposure Controls & Personal Protection	Section 16 - Other Information

The information in this document is compiled from information maintained by the United States Department of Defense (DOD). Anyone using this information is solely reponsible for the accuracy and applicability of this information to a particular use or situation.
Cornell University does not in any way warrant or imply the applicability, viability or use of this information to any person or for use in any situation.

Section 1 - Product and Company Identification
TRINITROTOLUENE (TNT) TYPE 1 FLAKE FORM

Product Identification: TRINITROTOLUENE (TNT) TYPE 1 FLAKE FORM
Date of MSDS: 07/02/1991 **Technical Review Date:** 09/10/1991
FSC: 1376 **NIIN: LIIN:** 00N018210
Submitter: N EN
Status Code: C
MFN: 01
Article: N
Kit Part: N

Manufacturer's Information

Manufacturer's Name: HERCULES INCORPORATED
Manufacturer's Address1: RADFORD ARMY AMMUNITION PLANT
Manufacturer's Address2: RADFORD, VA 24141
Manufacturer's Country: US
General Information Telephone: 703-639-7294
Emergency Telephone: 703-639-7294
Emergency Telephone: 703-639-7294
MSDS Preparer's Name: N/P
Proprietary: N
Reviewed: N
Published: Y
CAGE: 2D295
Special Project Code: N

Contractor Information

Contractor's Name: HERCULES INC
Contractor's Address1: RADFORD ARMY AMMUNITION PLANT
Contractor's Address2: RADFORD, VA 24141
Contractor's Telephone: 703-639-7294
Contractor's CAGE: 2D881

Contractor Information

Contractor's Name: HERCULES INCORPORATED
Post Office Box: N/K
Contractor's Address1: 84 5TH AVE
Contractor's Address2: NEW YORK, NY 10011-7603
Contractor's Telephone: UNKNOWN
Contractor's CAGE: 2D295

Section 2 - Compositon/Information on Ingredients
TRINITROTOLUENE (TNT) TYPE 1 FLAKE FORM

Ingredient Name: 2,4,6-TRINITROTOLUENE (TNT)
Ingredient CAS Number: 118-96-7 **Ingredient CAS Code:** M
RTECS Number: XU0175000 **RTECS Code:** M
=WT: =WT Code:
=Volume: =Volume Code:
>WT: >WT Code:
>Volume: >Volume Code:
<WT: <WT Code:
<Volume: <Volume Code:
% Low WT: % Low WT Code:
% High WT: % High WT Code:
% Low Volume: % Low Volume Code:
% High Volume: % High Volume Code:
% Text: 99
% Enviromental Weight:

Other REC Limits: N/K
OSHA PEL: S, 1.5 MG/M3 **OSHA PEL Code:** M
OSHA STEL: OSHA STEL Code:
ACGIH TLV: S, 0.5 MG/M3; 9293 **ACGIH TLV Code:** M
ACGIH STEL: N/P **ACGIH STEL Code:**
EPA Reporting Quantity:
DOT Reporting Quantity:
Ozone Depleting Chemical: N

Section 3 - Hazards Identification, Including Emergency Overview
TRINITROTOLUENE (TNT) TYPE 1 FLAKE FORM

Health Hazards Acute & Chronic: ALLERGENIC, CAN CAUSE DERMATITIS. DISCOLOR SKIN AND HAIR PALE YELLOW. CAUSES NAUSEA, VOMITING AND ANOREXIA ALSO LIVER AND BLOOD DAMAGE, AND APLASTIC ANEMIA.

Signs & Symptoms of Overexposure:
SEE HEALTH HAZARDS.

Medical Conditions Aggravated by Exposure:
NONE SPECIFIED BY MANUFACTURER.

LD50 LC50 Mixture: NONE SPECIFIED BY MANUFACTURER.

Route of Entry Indicators:
Inhalation: YES
Skin: NO
Ingestion: NO

Carcenogenicity Indicators
NTP: NO
IARC: NO
OSHA: NO

Carcinogenicity Explanation: NOT RELEVANT.

Section 4 - First Aid Measures
TRINITROTOLUENE (TNT) TYPE 1 FLAKE FORM

First Aid:
EYE:IMEEDIATELY FLUSH THOROUGHLY WITH LARGE AMOUNTS OF LOW PRESSURE WATER FOR AT LEAST 25 MINUTES. REMOVE CONTACT LENSES TO ASSURE THOROUGH FLUSHING. CALL MD. SKIN:WASH WITH TNT INDICATOR SOAP AND RUN NING WATER. INHAL:REMOVE TO FRESH AIR. TREAT ANY IRRITATION SYMPTOMATICALLY. CALL MD. INGEST:CALL MD IMMEDIATELY (FP N).

Section 5 - Fire Fighting Measures
TRINITROTOLUENE (TNT) TYPE 1 FLAKE FORM

Fire Fighting Procedures:

WEAR NIOSH/MSHA APPROVED SCBA AND FULL PROTECTIVE EQUIPMENT (FP N).
EVACUATE THE AREA.
Unusual Fire or Explosion Hazard:
HIGHLY DANGEROUS-SHOCK WILL EXPLODE IT. WILL DETONATE IF CONFINED AND EXPOSED TO EXTRME HEAT.
Extinguishing Media:
DELUGE WITH WATER-USE LARGE QUANTITIES.
Flash Point: Flash Point Text: EXPLODES

Autoignition Temperature:
Autoignition Temperature Text: N/A
Lower Limit(s): N/A
Upper Limit(s): N/A

Section 6 - Accidental Release Measures
TRINITROTOLUENE (TNT) TYPE 1 FLAKE FORM

Spill Release Procedures:
CLEAN UP SPILL IMMEDIATELY USING A SOFT BRISTLE BRUSH AND A CONDUCTIVE RUBBER OR PLASTIC SHOVEL.

Section 7 - Handling and Storage
TRINITROTOLUENE (TNT) TYPE 1 FLAKE FORM

Handling and Storage Precautions:

Other Precautions:

Section 8 - Exposure Controls & Personal Protection
TRINITROTOLUENE (TNT) TYPE 1 FLAKE FORM

Repiratory Protection:
NIOSH/MSHA APPROVED RESPIRATOR FOR DUSTS.
Ventilation:
MECHANICAL (GENERAL) VENTILATION.
Protective Gloves:
COTTON OR LEATHER GLOVES.
Eye Protection: CHEMICAL WORKERS GOGGLES (FP N).
Other Protective Equipment: FLAME-PROOF COVERALLS AND CONDUCTIVE SHOES.
Work Hygenic Practices: NONE SPECIFIED BY MANUFACTURER.
Supplemental Health & Safety Information: NONE SPECIFIED BY MANUFACTURER.

Section 9 - Physical & Chemical Properties
TRINITROTOLUENE (TNT) TYPE 1 FLAKE FORM

HCC: E1
NRC/State License Number:
Net Property Weight for Ammo:
Boiling Point: Boiling Point Text: 464F,240C
Melting/Freezing Point: Melting/Freezing Text: N/K

Decomposition Point: Decomposition Text: N/K
Vapor Pressure: N/K **Vapor Density:** N/A
Percent Volatile Organic Content:
Specific Gravity: 1.5-1.6
Volatile Organic Content Pounds per Gallon:
pH: N/K
Volatile Organic Content Grams per Liter:
Viscosity: N/P
Evaporation Weight and Reference: NOT APPLICABLE
Solubility in Water: 0.01% @ 25C
Appearance and Odor: FLAKES, PALE YELLOW IN COLOR.
Percent Volatiles by Volume: <0.1
Corrosion Rate: N/K

Section 10 - Stability & Reactivity Data
TRINITROTOLUENE (TNT) TYPE 1 FLAKE FORM

Stability Indicator: YES
Materials to Avoid:
SODIUM HYDROXIDE, POTASSIUM HYDROXIDE AND OTHER HIGHLY ALKALINE MATERIALS.
Stability Condition to Avoid:
AVOID CONTACT WITH ALKALINE MATERIALS. WILL DETONATE IF CONFINED AND EXPOSED TO EXTREME HEAT.
Hazardous Decomposition Products:
NOX.
Hazardous Polymerization Indicator: NO
Conditions to Avoid Polymerization:
NOT RELEVANT.

Section 11 - Toxicological Information
TRINITROTOLUENE (TNT) TYPE 1 FLAKE FORM

Toxicological Information:
N/P

Section 12 - Ecological Information
TRINITROTOLUENE (TNT) TYPE 1 FLAKE FORM

Ecological Information:
N/P

Section 13 - Disposal Considerations
TRINITROTOLUENE (TNT) TYPE 1 FLAKE FORM

Waste Disposal Methods:
BURN ON OPEN BURNING GROUND IN ACCORDANCE WITH STATE AND LOCAL REGULATIONS. MAY ALSO BE BURNED IN AN INCINERATOR APPROVED FOR EXPLOSIVES. DISPOSE OF IN ACCORDANCE WITH FEDERAL, STATE AND LOCAL REGULAT IONS (FP N).

Section 14 - MSDS Transport Information

TRINITROTOLUENE (TNT) TYPE 1 FLAKE FORM

Transport Information:
N/P

Section 15 - Regulatory Information
TRINITROTOLUENE (TNT) TYPE 1 FLAKE FORM

SARA Title III Information:
N/P
Federal Regulatory Information:
N/P
State Regulatory Information:
N/P

Section 16 - Other Information
TRINITROTOLUENE (TNT) TYPE 1 FLAKE FORM

Other Information:
N/P

HMIS Transportation Information

Product Identification: TRINITROTOLUENE (TNT) TYPE 1 FLAKE FORM
Transporation ID Number: 22878
Responsible Party CAGE: 2D295
Date MSDS Prepared: 07/02/1991
Date MSDS Reviewed: 10/21/1991
MFN: 10/21/1991
Submitter: N TN
Status Code: C

Container Information
- **Unit of Issue:** NK
- **Container Quantity:** NK
- **Type of Container:**
- **Net Unit Weight:**

Article without MSDS: N
Technical Entry NOS Shipping Number:
Radioactivity:
Form:
Net Explosive Weight:
Coast Guard Ammunition Code:
Magnetism: N/P
AF MMAC Code:
DOD Exemption Number:
Limited Quantity Indicator:
Multiple Kit Number: 0
Kit Indicator: N
Kit Part Indicator: N
Review Indicator: Y
Additional Data:

Department of Transportation Information

DOT Proper Shipping Name: CYCLOTETRAMETHYLENETETRANITRAMINE, WETTED OR HMX, WETTED OR OCTOGEN, WETTED
DOT PSN Code: EEL
Symbols:
DOT PSN Modifier: WITH NOT LESS THAN 15 PER CENT WATER, BY MASS
Hazard Class: 1.1D
UN ID Number: UN0226
DOT Packaging Group: II
Label: EXPLOSIVE 1.1D
Special Provision(s):
Packaging Exception:
Non Bulk Packaging: 62
Bulk Packaging: NONE
Maximimum Quanity in Passenger Area: FORBIDDEN
Maximimum Quanity in Cargo Area: FORBIDDEN
Stow in Vessel Requirements: B
Requirements Water/Sp/Other: 1E,5E

IMO Detail Information

IMO Proper Shipping Name: TRINITROTOLUENE
IMO PSN Code: PBV
IMO PSN Modifier: ,DRY OR WETTED WITH LESS THAN 30% WATER, BY MASS
IMDG Page Number: 1144
UN Number: 0209
UN Hazard Class: 1.1 D
IMO Packaging Group: -
Subsidiary Risk Label: -
EMS Number: 1-01
Medical First Aid Guide Number: *

IATA Detail Information

IATA Proper Shipping Name: N/A
IATA PSN Code: YYG
IATA PSN Modifier: TRINITROTOLUENE, DRY OR WETTED WITH LESS THAN 30% WATER, BY WEIGHT
IATA UN Id Number: 0209
IATA UN Class: 1.1D
Subsidiary Risk Class:
UN Packaging Group:
IATA Label:
Packaging Note for Passengers: FORB
Maximum Quantity for Passengers: FORB
Packaging Note for Cargo: FORB
Maximum Quantity for Cargo: FORB
Exceptions:

AFI Detail Information

AFI Proper Shipping Name: TETRAHYDROFURAN
AFI Symbols:
AFI PSN Code: XSI
AFI PSN Modifier:

AFI UN Id Number: UN2056
AFI Hazard Class: 3
AFI Packing Group: II
AFI Label:
Special Provisions: P5
Back Pack Reference: A7.3

HAZCOM Label Information

Product Identification: TRINITROTOLUENE (TNT) TYPE 1 FLAKE FORM
CAGE: 2D295
Assigned Individual: N
Company Name: HERCULES INCORPORATED
Company PO Box: N/K
Company Street Address1: 84 5TH AVE
Company Street Address2: NEW YORK, NY 10011-7603 US
Health Emergency Telephone: 703-639-7294
Label Required Indicator: Y
Date Label Reviewed: 09/10/1991
Status Code: C
Manufacturer's Label Number:
Date of Label: 09/10/1991
Year Procured: N/K
Organization Code: G
Chronic Hazard Indicator: Y
Eye Protection Indicator: YES
Skin Protection Indicator: YES
Respiratory Protection Indicator: YES
Signal Word: DANGER
Health Hazard: Slight
Contact Hazard: Slight
Fire Hazard: Severe
Reactivity Hazard: Severe

8/8/2002 6:10:22 PM

CORNELL

Material Safety Data Sheets

Division of Facilities Services

DOD Hazardous Material Information (ANSI Format) For Cornell University Convenience Only

TETRYL

Section 1 - Product and Company Identification	Section 9 - Physical & Chemical Properties
Section 2 - Compositon/Information on Ingredients	Section 10 - Stability & Reactivity Data
Section 3 - Hazards Identification Including Emergency Overview	Section 11 - Toxicological Information
Section 4 - First Aid Measures	Section 12 - Ecological Information
Section 5 - Fire Fighting Measures	Section 13 - Disposal Considerations
Section 6 - Accidental Release Measures	Section 14 - MSDS Transport Information
Section 7 - Handling and Storage	Section 15 - Regulatory Information
Section 8 - Exposure Controls & Personal Protection	Section 16 - Other Information

The information in this document is compiled from information maintained by the United States Department of Defense (DOD). Anyone using this information is solely reponsible for the accuracy and applicability of this information to a particular use or situation.
Cornell University does not in any way warrant or imply the applicability, viability or use of this information to any person or for use in any situation.

Section 1 - Product and Company Identification
TETRYL

Product Identification: TETRYL
Date of MSDS: 04/30/1991 **Technical Review Date:** 02/14/1992
FSC: 1375 **NIIN: LIIN:** 00N026374
Submitter: N EN
Status Code: C
MFN: 01
Article: N
Kit Part: N

Manufacturer's Information

Manufacturer's Name: ENSIGN-BICKFORD CO
Manufacturer's Address1: 660 HOPMEADOW ST
Manufacturer's Address2: SIMSBURY, CT 06070
Manufacturer's Country: US
General Information Telephone: 203-658-4411;203-843-2276
Emergency Telephone: 203-658-4411;203-843-2276
Emergency Telephone: 203-658-4411;203-843-2276
MSDS Preparer's Name: T.A. SHREVE
Proprietary: N
Reviewed: N
Published: Y
CAGE: 0B1W4
Special Project Code: N

Contractor Information

Contractor's Name: ENSIGN-BICKFORD CO
Contractor's Address1: 660 HOPMEADOW ST
Contractor's Address2: SIMSBURY, CT 06070
Contractor's Telephone: (203) 658-4411 OR (203) 843-22
Contractor's CAGE: 0B1W4

Contractor Information

Contractor's Name: THE ENSIGN-BICKFORD CO
Contractor's Address1: 660 HOPMEADOW ST
Contractor's Address2: SIMSBURY, CT 06070
Contractor's Telephone: (203) 658-4411
Contractor's CAGE: 0B2N1

Section 2 - Compositon/Information on Ingredients
TETRYL

Ingredient Name: ANILINE, N-METHYL-N,2,4,6-TETRANITRO-; (TRINITRO-2,4,6-PHENYLMETHYLMITRAMINE)
Ingredient CAS Number: 479-45-8 **Ingredient CAS Code:** M
RTECS Number: BY6300000 **RTECS Code:** M
=WT: =WT Code:
=Volume: =Volume Code:
>WT: >WT Code:
>Volume: >Volume Code:
<WT: <WT Code:
<Volume: <Volume Code:
% Low WT: % Low WT Code:
% High WT: % High WT Code:
% Low Volume: % Low Volume Code:
% High Volume: % High Volume Code:
% Text: 100
% Enviromental Weight:

Other REC Limits: N/K
OSHA PEL: S, 1.5 MG/M3 **OSHA PEL Code:** M
OSHA STEL: OSHA STEL Code:
ACGIH TLV: 1.5 MG/M3; 9293 **ACGIH TLV Code:** M
ACGIH STEL: N/P **ACGIH STEL Code:**
EPA Reporting Quantity:
DOT Reporting Quantity:
Ozone Depleting Chemical: N

Ingredient Name: ING 3:SENSITIVE TO DETONATION. IF POSS, SEPARATE ANY MATL THAT APPEARS TO BE UNCONTAMD FROM MATL THAT APPEARS TO (ING 5)
Ingredient CAS Number: Ingredient CAS Code: X
RTECS Number: 9999999ZZ **RTECS Code:** M
=WT: =WT Code:
=Volume: =Volume Code:
>WT: >WT Code:
>Volume: >Volume Code:
<WT: <WT Code:
<Volume: <Volume Code:
% Low WT: % Low WT Code:
% High WT: % High WT Code:
% Low Volume: % Low Volume Code:
% High Volume: % High Volume Code:
% Text: N/K
% Enviromental Weight:
Other REC Limits: N/K
OSHA PEL: NOT APPLICABLE **OSHA PEL Code:** M
OSHA STEL: OSHA STEL Code:
ACGIH TLV: NOT APPLICABLE **ACGIH TLV Code:** M
ACGIH STEL: N/P **ACGIH STEL Code:**
EPA Reporting Quantity:
DOT Reporting Quantity:
Ozone Depleting Chemical:

Ingredient Name: ING 4:BE GRIT CONTAMD. STORE COLLECTED MATL FOR PROPER DISP.
Ingredient CAS Number: Ingredient CAS Code: X
RTECS Number: 9999999ZZ **RTECS Code:** M
=WT: =WT Code:
=Volume: =Volume Code:
>WT: >WT Code:
>Volume: >Volume Code:
<WT: <WT Code:
<Volume: <Volume Code:
% Low WT: % Low WT Code:
% High WT: % High WT Code:
% Low Volume: % Low Volume Code:
% High Volume: % High Volume Code:
% Text: N/K
% Enviromental Weight:
Other REC Limits: N/K
OSHA PEL: NOT APPLICABLE **OSHA PEL Code:** M

OSHA STEL: OSHA STEL Code:
ACGIH TLV: NOT APPLICABLE **ACGIH TLV Code:** M
ACGIH STEL: N/P **ACGIH STEL Code:**
EPA Reporting Quantity:
DOT Reporting Quantity:
Ozone Depleting Chemical:

Ingredient Name: ING 6:RECOM MET OF DISP OF WASTE EXPLO IS BY OPEN BURN/OPEN DETONATION. TETRYL MAY BE DESTROYED BY BOIL IN SOLN (ING 8)
Ingredient CAS Number: Ingredient CAS Code: X
RTECS Number: 9999999ZZ **RTECS Code:** M
=WT: =WT Code:
=Volume: =Volume Code:
>WT: >WT Code:
>Volume: >Volume Code:
<WT: <WT Code:
<Volume: <Volume Code:
% Low WT: % Low WT Code:
% High WT: % High WT Code:
% Low Volume: % Low Volume Code:
% High Volume: % High Volume Code:
% Text: N/K
% Enviromental Weight:
Other REC Limits: N/K
OSHA PEL: NOT APPLICABLE **OSHA PEL Code:** M
OSHA STEL: OSHA STEL Code:
ACGIH TLV: NOT APPLICABLE **ACGIH TLV Code:** M
ACGIH STEL: N/P **ACGIH STEL Code:**
EPA Reporting Quantity:
DOT Reporting Quantity:
Ozone Depleting Chemical:

Ingredient Name: ING 7:OF SODIUM CARBONATE. BY-PROD & SPECIFICS OF RXN ARE NOT AVAILABLE.
Ingredient CAS Number: Ingredient CAS Code: X
RTECS Number: 9999999ZZ **RTECS Code:** M
=WT: =WT Code:
=Volume: =Volume Code:
>WT: >WT Code:
>Volume: >Volume Code:
<WT: <WT Code:
<Volume: <Volume Code:
% Low WT: % Low WT Code:
% High WT: % High WT Code:
% Low Volume: % Low Volume Code:
% High Volume: % High Volume Code:
% Text: N/K
% Enviromental Weight:
Other REC Limits: N/K
OSHA PEL: NOT APPLICABLE **OSHA PEL Code:** M
OSHA STEL: OSHA STEL Code:

ACGIH TLV: NOT APPLICABLE **ACGIH TLV Code:** M
ACGIH STEL: N/P **ACGIH STEL Code:**
EPA Reporting Quantity:
DOT Reporting Quantity:
Ozone Depleting Chemical:

Ingredient Name: SPILL PROC:FRICTION/IMPACT. PLACE MATL IN VELOSTAT BAG. CONTAM OF MATL W/SAND/DIRT/OTHER GRIT WILL RENDER IT MORE(ING 4)
Ingredient CAS Number: Ingredient CAS Code: X
RTECS Number: 9999999ZZ **RTECS Code:** M
=WT: =WT Code:
=Volume: =Volume Code:
>WT: >WT Code:
>Volume: >Volume Code:
<WT: <WT Code:
<Volume: <Volume Code:
% Low WT: % Low WT Code:
% High WT: % High WT Code:
% Low Volume: % Low Volume Code:
% High Volume: % High Volume Code:
% Text: N/K
% Enviromental Weight:
Other REC Limits: N/K
OSHA PEL: NOT APPLICABLE **OSHA PEL Code:** M
OSHA STEL: OSHA STEL Code:
ACGIH TLV: NOT APPLICABLE **ACGIH TLV Code:** M
ACGIH STEL: N/P **ACGIH STEL Code:**
EPA Reporting Quantity:
DOT Reporting Quantity:
Ozone Depleting Chemical:

Ingredient Name: SUPP DATA:IT DOES NOT DETONATE, IT WILL BURN VIGOROUSLY.DEFLAGRATION TEMPERATURE IS 185C (365F).
Ingredient CAS Number: Ingredient CAS Code: X
RTECS Number: 9999999ZZ **RTECS Code:** M
=WT: =WT Code:
=Volume: =Volume Code:
>WT: >WT Code:
>Volume: >Volume Code:
<WT: <WT Code:
<Volume: <Volume Code:
% Low WT: % Low WT Code:
% High WT: % High WT Code:
% Low Volume: % Low Volume Code:
% High Volume: % High Volume Code:
% Text: N/K
% Enviromental Weight:
Other REC Limits: N/K
OSHA PEL: NOT APPLICABLE **OSHA PEL Code:** M
OSHA STEL: OSHA STEL Code:
ACGIH TLV: NOT APPLICABLE **ACGIH TLV Code:** M

ACGIH STEL: N/P **ACGIH STEL Code:**
EPA Reporting Quantity:
DOT Reporting Quantity:
Ozone Depleting Chemical:

Ingredient Name: VENT:STRONGLY RECOMMENDED TO MINIMIZE EMPLOYEE EXPOSURE.
Ingredient CAS Number: Ingredient CAS Code: X
RTECS Number: 9999999ZZ **RTECS Code:** M
=WT: =WT Code:
=Volume: =Volume Code:
>WT: >WT Code:
>Volume: >Volume Code:
<WT: <WT Code:
<Volume: <Volume Code:
% Low WT: % Low WT Code:
% High WT: % High WT Code:
% Low Volume: % Low Volume Code:
% High Volume: % High Volume Code:
% Text: N/K
% Enviromental Weight:
Other REC Limits: N/K
OSHA PEL: NOT APPLICABLE **OSHA PEL Code:** M
OSHA STEL: OSHA STEL Code:
ACGIH TLV: NOT APPLICABLE **ACGIH TLV Code:** M
ACGIH STEL: N/P **ACGIH STEL Code:**
EPA Reporting Quantity:
DOT Reporting Quantity:
Ozone Depleting Chemical:

Ingredient Name: WASTE DISP METH:LBLG/PACKAGING/STOR & TRANSPORTATION) MUST BE PERFOMRED I/A/W ALL APPLIC LOC/ST/FED LAWS & REGS. (ING 7)
Ingredient CAS Number: Ingredient CAS Code: X
RTECS Number: 9999999ZZ **RTECS Code:** M
=WT: =WT Code:
=Volume: =Volume Code:
>WT: >WT Code:
>Volume: >Volume Code:
<WT: <WT Code:
<Volume: <Volume Code:
% Low WT: % Low WT Code:
% High WT: % High WT Code:
% Low Volume: % Low Volume Code:
% High Volume: % High Volume Code:
% Text: N/K
% Enviromental Weight:
Other REC Limits: N/K
OSHA PEL: NOT APPLICABLE **OSHA PEL Code:** M
OSHA STEL: OSHA STEL Code:
ACGIH TLV: NOT APPLICABLE **ACGIH TLV Code:** M
ACGIH STEL: N/P **ACGIH STEL Code:**

EPA Reporting Quantity:
DOT Reporting Quantity:
Ozone Depleting Chemical:

Section 3 - Hazards Identification, Including Emergency Overview
TETRYL

Health Hazards Acute & Chronic: EYE:MAY CAUSE IRRITATION, POSSIBLE EYE DAMAGE. SKIN:SKIN MAY TURN YELLOW & DERMATITIS MAY DEVELOP. INHAL:IRRITATION TO UPPER RESPIRATORY TRACT & POSSIBLE DEATH. INGEST:POISONING IS ACCOMPAINED BY FOLL OWING SYMPTOMS:LACK OF APPETITE, INSOMNIA, & GIDDINESS. SYMPTOMS USUALLY BEGIN AFTER 2-3 WEEKS OF BEING EXPOS TO TETRYL.

Signs & Symptoms of Overexposure:
SEE HEALTH HAZARDS.

Medical Conditions Aggravated by Exposure:
NONE SPECIFIED BY MANUFACTURER.

LD50 LC50 Mixture: NONE SPECIFIED BY MANUFACTURER.

Route of Entry Indicators:
Inhalation: YES
Skin: NO
Ingestion: YES

Carcenogenicity Indicators
NTP: NO
IARC: NO
OSHA: NO

Carcinogenicity Explanation: NOT RELEVANT.

Section 4 - First Aid Measures
TETRYL

First Aid:
EYE:FLUSH IMMED UNDER RUNNING WATER FOR AT LEAST 15 MIN, SEEK MED ATTN IMMED. SKIN:FLUSH IMMED UNDER RUNNING WATER FOR AT LEAST 15 MIN, SEEK MED ATTN IMMED. INHAL:GET VICTIM TO FRESH AIR. GIVE ARTF RE SP IF BRTHG HAS STOPPED.SEEK MED ATTN IMMED. INGEST:INDUCE VOMIT IMMED BY STICKING FINGER DOWN THROAT. SEEK MED ATTN IMMED.

Section 5 - Fire Fighting Measures
TETRYL

Fire Fighting Procedures:
NIOSH/MSHA APPRVD SCBA & FULL PROT EQUIP(FP N). DO NOT FIGHT FIRES INVOLVING TETRYL! PROD IS PRIMARY (INITIATING) EXPLO & MAY DETONATE WHEN EXPOS TO (SUPP DATA)

Unusual Fire or Explosion Hazard:
TETRYL IS PRIMARY(INITIATING) EXPLO. PROD IS LIKELY TO DETONATE WHEN EXPOS TO SHOCK/HEAT/IMPACT/SPARKS/FRICTION. PROD SHOULD BE HNDLD ONLY BY (SUPP DATA)
Extinguishing Media:
MEDIA SUITABLE FOR SURROUNDING FIRE (FP N).
Flash Point: Flash Point Text: N/K

Autoignition Temperature:
Autoignition Temperature Text: N/A
Lower Limit(s): N/K
Upper Limit(s): N/K

Section 6 - Accidental Release Measures
TETRYL

Spill Release Procedures:
ISOLATE SPILL AREA, KEEP ALL SOURCES OF IGNIT AWAY FROM SPILL & EVACUATE ALL NONESSENTIAL PERS TO SAFE DISTANT LOCATION. REMOVE ALL EXPLO THAT WERE NOT INVOLVED IN SPILL FROM SPILL AREA. CAREFULLY COL LECT SPILLED MATL, AVOID ANY EXCESS (ING 3)

Section 7 - Handling and Storage
TETRYL

Handling and Storage Precautions:

Other Precautions:

Section 8 - Exposure Controls & Personal Protection
TETRYL

Repiratory Protection:
NIOSH/MSHA APPROVED DUST RESPIRATOR SHOULD BE WORN WHEN HANDLING TETRYL.
Ventilation:
LOC EXHAUST:STRONGLY RECOM TO MINIMIZE EMPLOYEE EXPOS. SPECIAL:TETRYL DUST IS POISONOUS. MECH:EXHAUST VENT (ING 9)
Protective Gloves:
BUTYL RUBBER GLOVES.
Eye Protection: CHEMICAL WORKERS GOGGLES (FP N).
Other Protective Equipment: COTTON COVERALLS (ANTISTATIC) WHICH WILL PROTECT AGAINST POWDER SPLASHES; SHOULD BE REPLACED WHEN CONTAMINATED.
Work Hygenic Practices: NONE SPECIFIED BY MANUFACTURER.
Supplemental Health & Safety Information: FIRE FIGHT PROC:HEAT/FLAMES.DO NOT ATTEMPT TO FIGHT TETRYL FIRES!ISOLATE AFFECTED AREA & EVACUATE ALL PERS TO DISTANT,SAFE AREA.EXPLO HAZ:QUALIFIED INDIVIDUALS WHO ARE THORO FAMILIAR W/PROPER EXPLO HN DLG PROC.HAZ GASES (NITROGEN OXIDES, NO*X'S) MAY BE REL WHEN TETRYL BURNS/DETONATES.IF TETRYL IS EXPOS TO FIRE & (ING 2)

Section 9 - Physical & Chemical Properties
TETRYL

HCC: E2
NRC/State License Number:
Net Property Weight for Ammo:
Boiling Point: Boiling Point Text: N/A
Melting/Freezing Point: Melting/Freezing Text: 265F,129C
Decomposition Point: Decomposition Text: N/K
Vapor Pressure: N/A **Vapor Density:** N/A
Percent Volatile Organic Content:
Specific Gravity: N/K
Volatile Organic Content Pounds per Gallon:
pH: N/K
Volatile Organic Content Grams per Liter:
Viscosity: N/P
Evaporation Weight and Reference: NOT APPLICABLE
Solubility in Water: INSOLUBLE
Appearance and Odor: LIGHT YELLOW CRYSTALS.
Percent Volatiles by Volume: 100%
Corrosion Rate: N/K

Section 10 - Stability & Reactivity Data
TETRYL

Stability Indicator: YES
Materials to Avoid:
CARBON STEEL IS EASILY CORRODE BY TETRYL A SLIGHT CORROSION IS FOUND WITH ZINC AND ZINC PLATED STEEL.
Stability Condition to Avoid:
EXPOSURE TO SHOCK, SPARKS, PRESSURE, OR IMPACT MAY RESULT IN DETONATION.
Hazardous Decomposition Products:
THERMAL DECOMPOSITION MAY PRODUCE OXIDES OF CARBON & NITROGEN.
Hazardous Polymerization Indicator: NO
Conditions to Avoid Polymerization:
NOT RELEVANT.

Section 11 - Toxicological Information
TETRYL

Toxicological Information:
N/P

Section 12 - Ecological Information
TETRYL

Ecological Information:
N/P

Section 13 - Disposal Considerations
TETRYL

Waste Disposal Methods:
WASTE TETRYL IS HAZ WASTE AS DEFINED UNDER RESOURCE CONSERVATION & RECOVERY ACT (RCRA) REGS, & MUST BE DISP OF @ PROPERLY PERMITTED TRTMT/STOR/DISP FACILITY (TSD). WASTE TETRYL DISP & ALL RELATED, REG ULATED ACTIVITIES (INCL BUT NOT LIM TO (ING 6)

Section 14 - MSDS Transport Information
TETRYL

Transport Information:
N/P

Section 15 - Regulatory Information
TETRYL

SARA Title III Information:
N/P
Federal Regulatory Information:
N/P
State Regulatory Information:
N/P

Section 16 - Other Information
TETRYL

Other Information:
N/P

HMIS Transportation Information

Product Identification: TETRYL
Transporation ID Number: 31002
Responsible Party CAGE: 0B1W4
Date MSDS Prepared: 04/30/1991
Date MSDS Reviewed: 05/13/1992
MFN: 05/13/1992
Submitter: N TN
Status Code: C

Container Information
- **Unit of Issue:** NK
- **Container Quantity:** NK
- **Type of Container:**
- **Net Unit Weight:**

Article without MSDS: N
Technical Entry NOS Shipping Number:
Radioactivity:
Form:
Net Explosive Weight:
Coast Guard Ammunition Code:
Magnetism: N/P

AF MMAC Code:
DOD Exemption Number:
Limited Quantity Indicator:
Multiple Kit Number: 0
Kit Indicator: N
Kit Part Indicator: N
Review Indicator: Y
Additional Data:

Department of Transportation Information

DOT Proper Shipping Name: CYCLOTETRAMETHYLENETETRANITRAMINE, WETTED OR HMX, WETTED OR OCTOGEN, WETTED
DOT PSN Code: EEL
Symbols:
DOT PSN Modifier: WITH NOT LESS THAN 15 PER CENT WATER, BY MASS
Hazard Class: 1.1D
UN ID Number: UN0226
DOT Packaging Group: II
Label: EXPLOSIVE 1.1D
Special Provision(s):
Packaging Exception:
Non Bulk Packaging: 62
Bulk Packaging: NONE
Maximimum Quanity in Passenger Area: FORBIDDEN
Maximimum Quanity in Cargo Area: FORBIDDEN
Stow in Vessel Requirements: B
Requirements Water/Sp/Other: 1E,5E

IMO Detail Information

IMO Proper Shipping Name: TETRYL
IMO PSN Code: ONJ
IMO PSN Modifier:
IMDG Page Number: 1112
UN Number: 0208
UN Hazard Class: 1.1 D
IMO Packaging Group: -
Subsidiary Risk Label: -
EMS Number: 1-01
Medical First Aid Guide Number: T

IATA Detail Information

IATA Proper Shipping Name: N/A
IATA PSN Code: YXR
IATA PSN Modifier: TRINITROPHENYLMETHYLNITRAMINE
IATA UN Id Number: 0208
IATA UN Class: 1.1D
Subsidiary Risk Class:
UN Packaging Group:
IATA Label:
Packaging Note for Passengers: FORB
Maximum Quantity for Passengers: FORB
Packaging Note for Cargo: FORB

Maximum Quantity for Cargo: FORB
Exceptions:

AFI Detail Information

AFI Proper Shipping Name: TRINITROPHENYLMETHYLNITRAMINE OR TETRYL
AFI Symbols:
AFI PSN Code: YXR
AFI PSN Modifier:
AFI UN Id Number: UN0208
AFI Hazard Class: 1.1D
AFI Packing Group: II
AFI Label:
Special Provisions: P4
Back Pack Reference: A5.47

HAZCOM Label Information

Product Identification: TETRYL
CAGE: 0B1W4
Assigned Individual: N
Company Name: ENSIGN-BICKFORD CO
Company PO Box:
Company Street Address1: 660 HOPMEADOW ST
Company Street Address2: SIMSBURY, CT 06070 US
Health Emergency Telephone: 203-658-4411;203-843-2276
Label Required Indicator: Y
Date Label Reviewed: 02/14/1992
Status Code: C
Manufacturer's Label Number:
Date of Label: 02/14/1992
Year Procured: N/K
Organization Code: G
Chronic Hazard Indicator: N
Eye Protection Indicator: YES
Skin Protection Indicator: YES
Respiratory Protection Indicator: YES
Signal Word: DANGER
Health Hazard: Moderate
Contact Hazard: Moderate
Fire Hazard: None
Reactivity Hazard: Severe

8/8/2002 6:37:56 PM

12/19/2003 10:42 3017446533 IHDIV SAFETY DEPT PAGE 02

MATERIAL SAFETY DATA SHEET (MSDS)

Serial No. 5B01

(Assigned by Code 04)

Identity (As Used on Label)	Other Names
Nitroglycerin	NG, nitrate ester

Section I. General

Manufacturer Indian Head Division Naval Surface Warfare Center 101 Strauss Avenue Indian Head, MD 20640-5035	**Emergency Telephone Number** **Telephone Number for Information** **Date Prepared**	301-744-4438 301-744-4924 29 July 03

Section II. Summary of Hazards

The first symptoms of exposure to nitroglycerin are usually a headache, nausea or vomiting. Nitroglycerin is an irritant through inhalation, skin contact and eye contact. Exposure to nitroglycerin effects central nervous system depressant and methemoglobin formation. Persons at greatest risk when exposed include those with hypotension, anemia, hyperthyroidism and cardiovascular disease.

This document is the MSDS for **Nitroglycerin.**

Section III. Emergency and First Aid

Inhalation	Remove to fresh air immediately. If breathing has stopped, give artificial respiration. Seek medical attention.
Eye Contact	Wash eyes immediately with large amounts of water or saline solution, occasionally lifting upper and lower lids, for at least 15 minutes. Seek medical attention.
Skin Contact	Remove contaminated clothing immediately. Wash affected area with soap and water for at least 15 minutes. Seek medical attention if irritation persists.
Ingestion	DO NOT INDUCE VOMITING. Qualified medical personnel should remove chemical by gastric lavage or catharsis. Activated charcoal is useful. Seek medical attention.
Emergency Medical Treatment Procedures	Move victim to fresh air and call emergency medical care; if not breathing, give artificial respiration; if breathing is difficult, give oxygen. Keep victim quiet and maintain normal body temperature. Effects may be delayed; keep victim under observation.

Page 1 of 5 Rev. A

12/19/2003 10:42 3017446533 IHDIV SAFETY DEPT PAGE 03

Identity	Nitroglycerin

Section IV. Health Hazards/Symptoms of Exposure

Summary of Acute Hazards	Symptoms include headache, nausea, vomiting and skin irritation.

ROUTE OF EXPOSURE	SIGNS AND SYMPTOMS	PRIMARY ROUTE OF ENTRY
Inhalation:	Headache, conjunctivitis, nausea, vomiting, visual disturbances and mental confusion.	X
Eye Contact:	Local irritation, decreased visual acuity, systematic effects of headache, nausea, vomiting and other symptoms of narcosis.	
Skin Contact:	Local irritation and systematic effects of headache, nausea, vomiting and other symptoms of narcosis.	X
Ingestion:	Ingestion may cause numbness of extremities, tingling sensation, excitement, headache, hypotension, nausea, vomiting, abdominal cramps, gastroenteric irritation and respiratory difficulty.	
Chronic Hazards (Long Term)	Symptoms include headache, nausea, vomiting, hallucinations, hypotension, mental confusion, skin rashes, conjunctivitis and numbness. Long term exposure may result in acclimatization to discomforts produced by acute effects. Exposure also targets the skin, blood and cardiovascular system. NG is not a suspected carcinogen.	

Section V. Protective Equipment and Control Measures

Respiratory:	Organic vapor respirator/supplied air respirator is required if exposed to levels above OSHA limits.
Eye:	Chemical splash goggles and face shield are recommended when handling.
Skin:	Nitrile Buna-rubber gloves and flame-resistant powder uniform are recommended when handling.
Engineering Controls:	Use general or local exhaust ventilation to satisfy exposure limits. Ventilation equipment must be explosion-proof.
Other Hygienic and Work Practices:	Wear flame-resistant powder uniform, flame-resistant soft cap, and conductive-soled shoes. Have an eyewash and safety shower nearby. There should be no smoking or eating in the workplace.

Page 2 of 5 Rev. A

12/19/2003 10:42 3017446533 IHDIV SAFETY DEPT PAGE 04

Identity	Nitroglycerin

Section VI. Fire and Explosion

Flash Point (method):	Autoignition Temp (method)	Flammable Limits (% vol in air)	
Explodes	518 °F (270 °C)	Lower Unknown	Upper Unknown

Fire And Explosion Hazards:	Dangerously explosive. Moderate fire hazard when exposed to heat or flame.
Extinguishing Media:	Water sprinkler/deluge system recommended.
Special Fire Fighting Procedures:	Do not attempt to manually extinguish fires. Burning explosives may accelerate to a detonation at any time when subjected to confinement, shock or other sufficient initiation source. Positive pressure self-contained breathing apparatus (SCBA) and structural firefighter's protective clothing will provide limited protection. Withdraw from area and let fire burn. Promptly isolate the scene by removing all persons from the vicinity of the scene and away from windows.

Section VII. Spill and Disposal

Large Spill:	Shut off all sources of ignition. Do not touch spilled material. Smoking and open flames are strictly prohibited in the area. Evacuate area to a distance of 2500-feet in all directions. Control access to area and remove sources of friction, impact, heat, low level electrical current, electrostatic or RF energy. Review FIRE AND EXPLOSION HAZARDS and SAFETY PRECAUTIONS before proceeding with clean up. Keep unnecessary people away.
Small Spill:	Wipe up spill with an acetone-dampened sponge. Use conductive containers and ground all containers before transferring explosives between containers. Avoid metal-to-metal contact, impact, friction or other situations, which may initiate the explosive. Avoid sand, glass, grit and metal fragments which may sensitize the material to impact or friction.
Waste Disposal Methods:	Store and handle waste as a Class A explosive. Transport in accordance with Department of Transportation regulations for Class A explosives. Obtain approval from appropriate agencies prior to disposal. Consult manufacturer for recommended methods of destroying explosive materials. Comply with all Federal, State and local regulations. NG solutions must be disposed of as a hazardous waste per 40 CFR 262.

Section VIII. Handling and Storage

General Handling Procedures:	Avoid contact with heat, sparks, flames or other sources of ignition. Avoid friction, shock and impact. Use all required personal protective equipment. Explosives must be tested for compatibility with any materials which they contact. Wash thoroughly after handling. Wash contaminated clothing before use. Avoid pinching material, metal-to-metal contact, impact, friction, shock or other mechanical stimuli.
Storage Requirements:	Storage must be performed in accordance with appropriate safety regulations concerning quantity distance, barricading, personnel exposure and handling equipment. Storage containers should be grounded. Observe all federal, state and local regulations.

Page 3 of 5 Rev. A

12/19/2003 10:42 3017446533 IHDIV SAFETY DEPT PAGE 05

Identity	Nitroglycerin

Section IX. Stability and Reactivity

	Yes	No		
Stable Conditions	X		**Conditions To Avoid:**	Avoid heat, sparks, open flame and other sources of ignition. Avoid impact, shock, friction and electrostatic discharge. High explosives will detonate when exposed to sufficient mechanical and thermal stimuli.

Incompatibility (Materials to avoid): Acids, oxidizers and ozone.

Hazardous Decomposition By-Products: Carbon monoxide, carbon dioxide, oxides of nitrogen

	Yes	No		
Hazardous Polymerization		X	**Conditions To Avoid:**	Not applicable

Impact Sensitivity (mm)	8.4 mm for 50% height (NOS)	**Other**	
Friction Sensitivity (psig)	Unknown	**Other**	
ESD Sensitivity (joules)	≥12.5	**Other**	

Section X. Hazardous Ingredients/Identity Information

Hazardous Components	OSHA PEL	ACGIH TLV	Other Limits
Nitroglycerin (CAS# 55-63-0)	2.0 mg/m^3	0.5 mg/m^3	

Page 4 of 5 Rev. A

12/19/2003 10:42 3017446533 IHDIV SAFETY DEPT PAGE 05

Identity	Nitroglycerin		
Section XI. Physical and Chemical Data			
Boiling Point (indicate °F or °C)	424 °F (218 °C)	**Specific Gravity (water = 1)**	1.6
Vapor Pressure (mm Hg)	0.0015 @ 20 °C	**Melting Point (indicate °F or °C)**	55 °F (13 °C)
Vapor Density (Air = 1)	7.8	**Evaporation Rate (Butyl Acetate = 1)**	Unknown
Solubility in Water:	0.125%		
Appearance and Odor:	Colorless to pale yellow slightly viscous liquid with a sweet burning taste.		
Section XII. Other Information			

Health (blue)		2
Contact (white)		2
Fire (red)		3
Reactivity (yellow)		1.1

Hazardous Material Warning Label (for Naval Surface Warfare Center, Indian Head Division use only)

0 = no significant hazard

1 = slight hazard

2 = moderate hazard

3 = severe hazard

1.3 = mass fire explosive

1.1 = mass detonating explosive

ND = hazard has not yet been determined

Shipping Name:	Explosive A		
UN or North American Identification Number	Explosive A	**Hazard Class and Packing Group**	Class 1 Division 1.1 Explosives
TSCA Status	All components are listed in the TSCA chemical inventory.		
CERCLA/SARA:	Report spills per 40 CFR 302.6 and 40 CFR 372.30.		
RCRA:	Discarded Nitroglycerin solution is a D003 (reactive) RCRA hazardous waste. Dispose of according to federal, state and local regulations.		
State Regulatory Information:	This material contains nitroglycerin and is thus a P081 (reactive) COMAR hazardous waste.		

Page 5 of 5 Rev. A

12/19/2003 10:42 3017446533 IHDIV SAFETY DEPT PAGE 87

15380

NEXPLO BOFORS

SAFETY DATA SHEET

Issued by, Department, Telephone	Date	Edition number	Document number
Birgitta Pettersson, XM3, 83535	1999-03-29	1	

Product denomination: Nitrocellulose NSC 830

1 Identification of the substance and of the company/undertaking

Product name	Nitrocellulose
Chemical name	Nitrocellulose, NSC 830
Company/Manufacturer	NEXPLO BOFORS AB
Company address	S-691 86 KARLSKOGA , SWEDEN
Telephone number	46-586-830 50
Telefax number	46-586-853 10
Emergency telephone number	46-586-832 00, ERC + m 46-0(8)-33 70 43
Contact person	Birgitta Pettersson/XM 3
Dangerous Goods, documentation	Birgitta Pettersson

2 Composition/Information on ingredients

Identification of product	Substances	CAS-number	%	Risk phrases
Nitrocellulose, N-content < 12.6 %	NC, wetted	9004-70-0	100	11

3 Hazard Identification

Health hazard	-
Inhalation	May irritate respiratory organs and lungs. May cause headache.
Skin contact	May irritate.
Eye contact	May irritate.
Ingestion	May irritate and cause headache.
Fire and explosion hazards	HIGHLY FLAMMABLE.

NOTE ! Risk that fire continues into explosion. Nitrocellulose is in dry or slightly wetted condition a heavy explosive. It can easily be ignited or explode by shock, friction, sparks or contact with hot surfaces. In disadvantageous cases dust or dry NC can be ignitated by sweeping with a hard brush, for example. Dry NC may self-ignate, for example exposed in sunshine. NC developes toxic smoke at heating/combustion.

PAGE 01

NEXPLO BOFORS

SAFETY DATA SHEET 2 (7)

Issued by, Department, Telephone	Date	Revision number	Replaces issue number
Birgitta Pettersson, XM3, 83535	1999-03-29	1	

Product designation: Nitrocellulose NSC 830

Environmental hazards	Waste of wetted nitrocellulose must immediately be taken care of. Dry product must be wetted before it can be taken care of. Product in the nature may cause overfeeding through Nitrogen-addition.

4 First-aid measures

After inhalation	Inhalation of gases from fire: Fresh air, warmth and rest, in halfsitting position. Avoid strain - increased risk for affection on the lungs. Use octogen, go to hospital even by small troubles.
After skin contact	Take off contaminated clothes/shoes. Wash with soap and water.
After eye contact	Rinse with water.
After ingestion	No harmful effects known.

5 Fire-fighting measures

Extinguishing media	
- Suitable extinguishing media	Use copious volumes of water, sprinkler.
- Extinguishing media not to be used	NOT fire - extinction powder.
Special exposure causing hazard	Nitrous gases.
Special protective equipment for fire-fighters	Full protection including compressed air mask.

6 Accidental release measures

Personal precautions	Flame-protection treated clothes, protecting against direct contact, and gloves.
Environmental precautions	Production as far as possible in closed systems. Containers must be kept well closed. Working place and methods must be planned in such a way that direct contact with NC is prevented and potential wastage from leaking production kettles can be taken care of before product is getting dry and contaminating the sewage system. Special explosive separators must exist in resp. room. Rooms and equipment must regarly be rinsed with water for removal of wastage.

NEXPLO
BOFORS

SAFETY DATA SHEET 3 (7)

Issued by, Department, Telephone	Date	Edition number	Document number
Birgitta Pettersson, XM3, 83535	1999-03-29	1	

Product denomination
Nitrocellulose NSC 830

Methods for cleaning up	Product, wetted with water, shall be collected and put into special and marked containers. Waste shall be burned in open air and set to fire from a protected place. Destruction shall be carried out by experts. Contact fire-brigade.

7 Handling and storage

Handling	Product must be kept wet. Containers keeps wetted and must continuesly be tested concerning moisture content. Explosive classified electric equipment must be used. Equipment well earthed.
Storage	Must always be stored wetted with water in tight closing containers, only in places approved for explosives. Keep protected from warmth. By intermediate soring, for example in production stores, the water-content must be checked every week, especially by sunshine and hot weather.

8 Personal protection/Exposure controls

Engineering measures	Must only be handled in rooms where water pouring is possible. Keep containers well closed. Working place and methods must be planned in such a way that direct contact with NC is avoided. No smoking, fire, sparks or welding. Prevent sparks caused by static electricity. Use explosion protected el-equipment.
Personal protection equipment	
Respiratory protection	Inhalation protection with dust-filter P2 is recommended at cleaning of rooms, machine equipment, transportators etc., which are swept by brushes, before pouring with water.
Hand protection	Tightly lined gloves, of plastic or plastic gloves with cotton inside glove.
Eye protection	Face screen or glasses with side-protection is recommended by cleaning.
Skin protection	Flame-protection treated clothes, as close-fitted as possible, when direct contact is risked.
Specific hygiene measures	-
Further information	Because of the explosion risk must the product be kept wetted.

NEXPLO BOFORS

SAFETY DATA SHEET 4 (7)

Issued by, Department, Telephone	Date	Edition number	Document number
Birgitta Pettersson, XM3, 83535	1999-03-29	1	

Product denomination
Nitrocellulose NSC 830

9 Physical and chemical properties

Appearance	Fibres
Colour	White
Odour	-
Decomposition point (°C)	Heated NC during a longer period of time decomposition can happen with a temperature > 100 °C.
Melting point/range (°C)	-
Flash point (°C)	-
Autoignition temperature (°C)	185 - 190 (Explosive temp.)
Explosion properties	Explosive
Boiling point/range (°C)	-
Relative density (kg/m^3)	~1160
Solubility in water	Insoluble
Solubility in other solvents	Ketones and esters.
Partition coefficient n-octanol/water	-
Other data	-

10 Stability and reactivity

Conditions to avoid	Risk for fire. Shock, friction, sparks, electrostatic electricity must be avoided. Must not be stored in temperatures higher than normal room temperature. Must be protected against getting dry.
Materials to avoid	Alkaline substances and strong acids.
Hazardous decomposition products	Nitrous gases.
Other information	

11 Toxicological information

LD_{50} oral rat	> 2000 mg/kg
Hazardous ingredients	No harmful effects known from available literature.

12/19/2003 10:42 3817446533 IHDIV SAFETY DEPT PAGE 11

NEXPLO BOFORS

SAFETY DATA SHEET 5 (7)

Issued by, Occupational Telephone	Date	Edition number	Document number
Birgitta Pettersson, XM3, 83535	1999-03-29	1	

Product denomination: Nitrocellulose NSC 830

Immediate health effects	-
Delayed health effects	Not known
Acute toxicity	Not known
Chronic toxicity (long-term)	Not known
Carcinogenicity	-
Mutagenicity	-
Reproductive toxicity	-
Inhalation	Irritates the respiratory organs.
Skin	Irritates
Eye	Irritates
Ingestion	May cause headache.
Hygienic standards and recommendations	Swedish limit value not existing.

12 Ecological information

Microtox (mg/ml, LC_{50})/(mg/ml, EC_{50})	96-HR LC50, Brachydanio Rerio(Zebrafish) > 10000 mg/l
Mobility	-
Persistence degradability	28 days = 10 % at 10 mg/l, COD 0,463 g/g
Bioaccumulative potential	-
Aquatic toxicity and other data	-
Marine pollutant (IMDG Code)	-

13 Disposal considerations

Disposal of waste materials	Wastage, wetted with water, shall be collected and put in special container. At destruction experts shall be called upon.Contact fire-brigade.
Contaminated packaging	Must be disposed of in a safe way.

MAR 29 1999 10:11 46 585 85318 PAGE.05

NEXPLO
BOFORS

SAFETY DATA SHEET 7 (7)

Issued by, Department, Telephone	Date	Edition number	Document number
Birgitta Pettersson, XM3, 83535	1999-03-29	1	
Product denomination: Nitrocellulose NSC 830			

Symbols	F, Extremely flammable.
Risk phrases	R11, Highly flammable.
Safety phrases	S16, Keep away from sources of ignition - No smoking.
	S33, Take precautionary measures against static electricity.
	S37, Wear suitable gloves.
	S39, Wear eye/face protection.

16 Other information

References	SAX'S DANGEROUS PROPERTIES OF INDUSTRIAL MATERIALS.
	Arbetarskyddsstyrelsens författningssamling 1993:9

CORNELL

Material Safety Data Sheets

Division of Facilities Services

DOD Hazardous Material Information (ANSI Format)
For Cornell University Convenience Only

DIETHYL PHTHALATE, H944

Section 1 - Product and Company Identification	Section 9 - Physical & Chemical Properties
Section 2 - Compositon/Information on Ingredients	Section 10 - Stability & Reactivity Data
Section 3 - Hazards Identification Including Emergency Overview	Section 11 - Toxicological Information
Section 4 - First Aid Measures	Section 12 - Ecological Information
Section 5 - Fire Fighting Measures	Section 13 - Disposal Considerations
Section 6 - Accidental Release Measures	Section 14 - MSDS Transport Information
Section 7 - Handling and Storage	Section 15 - Regulatory Information
Section 8 - Exposure Controls & Personal Protection	Section 16 - Other Information

The information in this document is compiled from information maintained by the United States Department of Defense (DOD). Anyone using this information is solely reponsible for the accuracy and applicability of this information to a particular use or situation.
Cornell University does not in any way warrant or imply the applicability, viability or use of this information to any person or for use in any situation.

Section 1 - Product and Company Identification
DIETHYL PHTHALATE, H944

Product Identification: DIETHYL PHTHALATE, H944
Date of MSDS: 08/15/1996 **Technical Review Date:** 12/22/1997
FSC: 6810 **NIIN: LIIN:** 00N062225
Submitter: N EN
Status Code: C
MFN: 02
Article: N
Kit Part: N

Manufacturer's Information

Manufacturer's Name: J.T. BAKER INC
Manufacturer's Address1: 222 RED SCHOOL LANE
Manufacturer's Address2: PHILLIPSBURG, NJ 08885-2219
Manufacturer's Country: US
General Information Telephone: 908-859-2151
Emergency Telephone: 800-424-6802;800-424-9300(CHEMTREC)
Emergency Telephone: 800-424-6802;800-424-9300(CHEMTREC)
MSDS Preparer's Name: N/P
Proprietary: N
Reviewed: N
Published: Y
CAGE: JO091
Special Project Code: N

Contractor Information

Contractor's Name: J.T. BAKER INC
Contractor's Address1: 222 RED SCHOOL LANE
Contractor's Address2: PHILLIPSBURG, NJ 08885-2219
Contractor's Telephone: 908-859-2151
Contractor's CAGE: JO091

Contractor Information

Contractor's Name: MALLINCKRODT BAKER, INC. (FORMERLY J.T. BAKER INC)
Contractor's Address1: 222 RED SCHOOL LANE
Contractor's Address2: PHILLIPSBURG, NJ 08865-2219
Contractor's Telephone: 800-582-2537
Contractor's CAGE: 70829

Section 2 - Compositon/Information on Ingredients
DIETHYL PHTHALATE, H944

Ingredient Name: PHTHALIC ACID, DIETHYL ESTER; (DIETHYL PHTHALATE) (SARA 313) (CERCLA). LD50:(ORAL,RAT) 8600 MG/KG.
Ingredient CAS Number: 84-66-2 **Ingredient CAS Code:** M
RTECS Number: TI1050000 **RTECS Code:** M
=WT: =WT Code:
=Volume: =Volume Code:
>WT: >WT Code:
>Volume: >Volume Code:
<WT: <WT Code:
<Volume: <Volume Code:
% Low WT: % Low WT Code:
% High WT: % High WT Code:
% Low Volume: % Low Volume Code:
% High Volume: % High Volume Code:
% Text: 99-100
% Enviromental Weight:

Other REC Limits: N/K
OSHA PEL: 5 MG/M3 **OSHA PEL Code:** M
OSHA STEL: OSHA STEL Code:
ACGIH TLV: 5 MG/M3 **ACGIH TLV Code:** M
ACGIH STEL: N/P **ACGIH STEL Code:**
EPA Reporting Quantity: 1000 LBS
DOT Reporting Quantity: 1000 LBS
Ozone Depleting Chemical: N

Section 3 - Hazards Identification, Including Emergency Overview
DIETHYL PHTHALATE, H944

Health Hazards Acute & Chronic: ACUTE:INHALATION:IRRITATION OF MUCOUS MEMBRANES, COUGHING, DIFFICULT BREATHING, MAY CAUSE NARCOSIS. SKIN/EYE CONTACT:IRRITATION. SKIN ABSORPTION:NONE IDENTIFIED. INGESTION:IRRITATION OF MUCOUS MEMBRAN ES, HEADACHE, NAUSEA, VOMITING, DIZZINESS, GASTROINTESTINAL IRRITATION, CENTRAL NERVOUS SYSTEM DEPRESS.(EFTS OF OVEREXP)

Signs & Symptoms of Overexposure:
HLTH HAZ:CHRONIC:SOME REPORTS HAVE INDICATED THAT THIS SUBSTANCE MAY BE TERATOGENIC.

Medical Conditions Aggravated by Exposure:
NONE IDENTIFIED.

LD50 LC50 Mixture: SEE INGREDIENT 1.

Route of Entry Indicators:
Inhalation: YES
Skin: YES
Ingestion: YES

Carcenogenicity Indicators
NTP: NO
IARC: NO
OSHA: NO

Carcinogenicity Explanation: NOT RELEVANT

Section 4 - First Aid Measures
DIETHYL PHTHALATE, H944

First Aid:
INGEST:IF CONSCIOUS, IMMEDIATELY INDUCE VOMITING. INHAL:IF PERSON BREATHES IN LARGE AMOUNTS, MOVE EXPOSED PERSON TO FRESH AIR. SKIN:IMMEDIATELY WASH W/PLENTY OF SOAP & WATER FOR AT LEAST 15 MINUTES. E YES:IMMEDIATELY FLUSH W/PLENTY OF WATERFOR AT LEAST 15 MINUTES.

Section 5 - Fire Fighting Measures

DIETHYL PHTHALATE, H944

Fire Fighting Procedures:
USE NIOSH APPROVED SCBA & FULL PROTECTIVE EQUIPMENT (FP N). MOVE CNTNRS FROM FIRE AREA IF IT CAN BE DONE W/OUT RISK. USE WATER TO KEEP FIRE-EXPOS CNTNRS COOL.
Unusual Fire or Explosion Hazard:
CLOSED CONTAINERS EXPOSED TO HEAT MAY EXPLODE.
Extinguishing Media:
USE EXTINGUISHING MEDIA APPROPRIATE FOR SURROUNDING FIRE.
Flash Point: Flash Point Text: 322F,160C

Autoignition Temperature:
Autoignition Temperature Text: N/A
Lower Limit(s): 0.07%
Upper Limit(s): N/A

Section 6 - Accidental Release Measures
DIETHYL PHTHALATE, H944

Spill Release Procedures:
WEAR SUITABLE PROTECTIVE CLOTHING. TAKE UP W/SAND OR OTHER NON-COMBUSTIBLE ABSORBENT MATERIAL & PLACE INTO CONTAINER FOR LATER DISPOSAL. FLUSH SPILL AREA W/WATER. REPORTABLE QUANTITY:1000 LBS.

Section 7 - Handling and Storage
DIETHYL PHTHALATE, H944

Handling and Storage Precautions:

Other Precautions:

Section 8 - Exposure Controls & Personal Protection
DIETHYL PHTHALATE, H944

Repiratory Protection:
NIOSH APPROVED RESPIRATORY PROTECTION REQUIRED IF AIRBORNE CONCENTRATION EXCEEDS TLV. AT CONCENTRATIONS UP TO 25 PPM, A NIOSH APPROVED HIGH-EFFICIENCY PARTICULATE RESPIRATOR IS REC. ABOVE THIS LEVEL, A NIOSH APPROVED SCBA IS ADVISED.
Ventilation:
USE GENERAL OR LOCAL EXHAUST VENTILATION TO MEET TLV REQUIREMENTS.
Protective Gloves:
NEOPRENE GLOVES.
Eye Protection: ANSI APPROVED CHEM WORKERS GOGGS (FP N).
Other Protective Equipment: ANSI APPRVD EYE WASH FOUNTAIN & DELUGE SHOWER (FP N). UNIFORM & APRON ARE REC. LAB COAT. NOTE:WHEN HNDLG LIQ (SUPP DATA)
Work Hygenic Practices: WASH THOROUGHLY AFTER HANDLING.
Supplemental Health & Safety Information: OTHER PROT EQUIP:PRODUCTS, SECONDARY

PROTECTIVE CONTAINERS MUST BE USED FOR CARRYING.

Section 9 - Physical & Chemical Properties
DIETHYL PHTHALATE, H944

HCC:
NRC/State License Number:
Net Property Weight for Ammo:
Boiling Point: Boiling Point Text: 568F,298C
Melting/Freezing Point: Melting/Freezing Text: -40F,-40C
Decomposition Point: Decomposition Text: N/K
Vapor Pressure: <1 @ 20C **Vapor Density:** 7.6
Percent Volatile Organic Content:
Specific Gravity: 1.12 (H*2O=1)
Volatile Organic Content Pounds per Gallon:
pH: N/A
Volatile Organic Content Grams per Liter:
Viscosity: N/P
Evaporation Weight and Reference: NOT APPLICABLE
Solubility in Water: NEGLIGIBLE (<0.1%)
Appearance and Odor: COLORLESS VISCOUS LIQUID; ODORLESS.
Percent Volatiles by Volume: 100
Corrosion Rate: N/K

Section 10 - Stability & Reactivity Data
DIETHYL PHTHALATE, H944

Stability Indicator: YES
Materials to Avoid:
STRONG OXIDIZING AGENTS, STRONG ACIDS, NITRIC ACID, STRONG BASES.
Stability Condition to Avoid:
HEAT, FLAME, OTHER SOURCES OF IGNITION.
Hazardous Decomposition Products:
CARBON MONOXIDE, CARBON DIOXIDE.
Hazardous Polymerization Indicator: NO
Conditions to Avoid Polymerization:
NOT RELEVANT

Section 11 - Toxicological Information
DIETHYL PHTHALATE, H944

Toxicological Information:
N/P

Section 12 - Ecological Information
DIETHYL PHTHALATE, H944

Ecological Information:
N/P

Section 13 - Disposal Considerations
DIETHYL PHTHALATE, H944

Waste Disposal Methods:
DISPOSE I/A/W ALL APPLICABLE FEDERAL, STATE & LOCAL ENVIRONMENTAL REGULATIONS. EPA HAZARDOUS WASTE NUMBER:U088 (TOXIC WASTE).

Section 14 - MSDS Transport Information
DIETHYL PHTHALATE, H944

Transport Information:
N/P

Section 15 - Regulatory Information
DIETHYL PHTHALATE, H944

SARA Title III Information:
N/P
Federal Regulatory Information:
N/P
State Regulatory Information:
N/P

Section 16 - Other Information
DIETHYL PHTHALATE, H944

Other Information:
N/P

HAZCOM Label Information

Product Identification: DIETHYL PHTHALATE, H944
CAGE: JO091
Assigned Individual: Y
Company Name: J.T. BAKER INC
Company PO Box:
Company Street Address1: 222 RED SCHOOL LANE
Company Street Address2: PHILLIPSBURG, NJ 08885-2219 US
Health Emergency Telephone: 800-424-6802;800-424-9300(CHEMTREC)
Label Required Indicator: Y
Date Label Reviewed: 12/22/1997
Status Code: C
Manufacturer's Label Number:
Date of Label: 12/22/1997
Year Procured: N/K
Organization Code: G
Chronic Hazard Indicator: Y
Eye Protection Indicator: YES
Skin Protection Indicator: YES
Respiratory Protection Indicator: YES
Signal Word: WARNING
Health Hazard: Moderate
Contact Hazard: Moderate
Fire Hazard: Slight
Reactivity Hazard: None

CORNELL

Material Safety Data Sheets

Division of Facilities Services

DOD Hazardous Material Information (ANSI Format)
For Cornell University Convenience Only

104 0724 TRIACETIN

Section 1 - Product and Company Identification	Section 9 - Physical & Chemical Properties
Section 2 - Compositon/Information on Ingredients	Section 10 - Stability & Reactivity Data
Section 3 - Hazards Identification Including Emergency Overview	Section 11 - Toxicological Information
Section 4 - First Aid Measures	Section 12 - Ecological Information
Section 5 - Fire Fighting Measures	Section 13 - Disposal Considerations
Section 6 - Accidental Release Measures	Section 14 - MSDS Transport Information
Section 7 - Handling and Storage	Section 15 - Regulatory Information
Section 8 - Exposure Controls & Personal Protection	Section 16 - Other Information

The information in this document is compiled from information maintained by the United States Department of Defense (DOD). Anyone using this information is solely reponsible for the accuracy and applicability of this information to a particular use or situation.
Cornell University does not in any way warrant or imply the applicability, viability or use of this information to any person or for use in any situation.

Section 1 - Product and Company Identification
104 0724 TRIACETIN

Product Identification: 104 0724 TRIACETIN
Date of MSDS: 05/14/1986 **Technical Review Date:** 08/11/1998
FSC: 6810 **NIIN: LIIN:** 00F014969
Submitter: F BT
Status Code: C
MFN: 01
Article: N
Kit Part: N

Manufacturer's Information

Manufacturer's Name: EASTMAN KODAK CO
Post Office Box: N/K
Manufacturer's Address1: 343 STATE ST
Manufacturer's Address2: ROCHESTER, NY 14650-1115
Manufacturer's Country: US
General Information Telephone: 716-724-6481/716-722-5151
Emergency Telephone: 716-722-5151/716-724-4501
Emergency Telephone: 716-722-5151/716-724-4501
MSDS Preparer's Name: N/P
Proprietary: N
Reviewed: Y
Published: Y
CAGE: 19139
Special Project Code: N

Preparer Information

Preparer's Name: EASTMAN KODAK CO GOVERNMENT MARKETS CONTRACTS
Preparer's Address1: 343 STATE ST
Preparer's Address2: ROCHESTER, NY 14650-1115
Preparer's CAGE: 19139
Assigned Individual: N

Contractor Information

Contractor's Name: EASTMAN KODAK CO GOVERNMENT MARKETS CONTRACTS
Contractor's Address1: 343 STATE ST
Contractor's Address2: ROCHESTER, NY 14650-1115
Contractor's Telephone: 716-722-5151/(800) 242-2424
Contractor's CAGE: 19139

Section 2 - Compositon/Information on Ingredients
104 0724 TRIACETIN

Ingredient Name: TRIACETIN *98-2*
Ingredient CAS Number: 102-76-1 **Ingredient CAS Code:** M
RTECS Number: AK3675000 **RTECS Code:** M
=WT: =WT Code:
=Volume: =Volume Code:
>WT: >WT Code:
>Volume: >Volume Code:
<WT: <WT Code:
<Volume: <Volume Code:
% Low WT: % Low WT Code:
% High WT: % High WT Code:
% Low Volume: % Low Volume Code:
% High Volume: % High Volume Code:
% Text: 100
% Enviromental Weight:

Other REC Limits: N/K
OSHA PEL: N/K **OSHA PEL Code:** M
OSHA STEL: OSHA STEL Code:
ACGIH TLV: N/K **ACGIH TLV Code:** M
ACGIH STEL: N/P **ACGIH STEL Code:**
EPA Reporting Quantity:
DOT Reporting Quantity:
Ozone Depleting Chemical: N

Section 3 - Hazards Identification, Including Emergency Overview
104 0724 TRIACETIN

Health Hazards Acute & Chronic: EYES: TRANSIENT IRRITATION.
INHALATION/INGESTION/SKIN: LOW HAZARD.

Signs & Symptoms of Overexposure:
IRRITATION

Medical Conditions Aggravated by Exposure:
N/K

LD50 LC50 Mixture: N/K

Route of Entry Indicators:
Inhalation: NO
Skin: NO
Ingestion: NO

Carcenogenicity Indicators
NTP: NO
IARC: NO
OSHA: NO

Carcinogenicity Explanation: NONE

Section 4 - First Aid Measures
104 0724 TRIACETIN

First Aid:
EYES: FLUSH W/PLENTY OF WATER. OBTAIN MEDICAL ATTENTION IN ALL CASES.

Section 5 - Fire Fighting Measures
104 0724 TRIACETIN

Fire Fighting Procedures:
N/K
Unusual Fire or Explosion Hazard:
N/K
Extinguishing Media:
WATER SPRAY, DRY CHEMICAL, CO2, & ALCOHOL FOAM.

Flash Point: Flash Point Text: 308F

Autoignition Temperature:
Autoignition Temperature Text: N/A
Lower Limit(s): N/K
Upper Limit(s): N/K

Section 6 - Accidental Release Measures
104 0724 TRIACETIN

Spill Release Procedures:
ABSORB MATERIAL IN VERMICULITE/OTHER SUITABLE ABSORBENT & PLACE IN IMPERVIOUS CONTAINER.

Section 7 - Handling and Storage
104 0724 TRIACETIN

Handling and Storage Precautions:

Other Precautions:

Section 8 - Exposure Controls & Personal Protection
104 0724 TRIACETIN

Repiratory Protection:
N/K
Ventilation:
GOOD VENTILATION SHOULD BE SUFFICIENT.
Protective Gloves:
N/K
Eye Protection: SAFETY GLASSES
Other Protective Equipment: N/K
Work Hygenic Practices: N/K
Supplemental Health & Safety Information: N/K

Section 9 - Physical & Chemical Properties
104 0724 TRIACETIN

HCC:
NRC/State License Number:
Net Property Weight for Ammo:
Boiling Point: Boiling Point Text: 496F
Melting/Freezing Point: Melting/Freezing Text: N/K
Decomposition Point: Decomposition Text: N/K
Vapor Pressure: 1 **Vapor Density:** N/K
Percent Volatile Organic Content:
Specific Gravity: 1.16
Volatile Organic Content Pounds per Gallon:
pH: N/K
Volatile Organic Content Grams per Liter:

Viscosity: N/P
Evaporation Weight and Reference: (N-BU AC = 1): <0.1
Solubility in Water: 1-10%
Appearance and Odor: COLORLESS LIQUID
Percent Volatiles by Volume: N/K
Corrosion Rate: N/K

Section 10 - Stability & Reactivity Data
104 0724 TRIACETIN

Stability Indicator: YES
Materials to Avoid:
STRONG OXIDIZERS
Stability Condition to Avoid:
N/K
Hazardous Decomposition Products:
CO2 & CO.
Hazardous Polymerization Indicator: NO
Conditions to Avoid Polymerization:
N/K

Section 11 - Toxicological Information
104 0724 TRIACETIN

Toxicological Information:
N/P

Section 12 - Ecological Information
104 0724 TRIACETIN

Ecological Information:
N/P

Section 13 - Disposal Considerations
104 0724 TRIACETIN

Waste Disposal Methods:
DISPOSE BY INCINERATION/CONTRACT W/LICENSED CHEMICAL WASTE DISPOSAL AGENCY. DISCHARGE, TREATMENT/DISPOSAL SHOULD BE IAW/LOCAL, STATE & FEDERAL REGULATIONS.

Section 14 - MSDS Transport Information
104 0724 TRIACETIN

Transport Information:
N/P

Section 15 - Regulatory Information
104 0724 TRIACETIN

SARA Title III Information:
N/P

Federal Regulatory Information:
N/P
State Regulatory Information:
N/P

Section 16 - Other Information
104 0724 TRIACETIN

Other Information:
N/P

HAZCOM Label Information

Product Identification: 104 0724 TRIACETIN
CAGE: 19139
Assigned Individual: N
Company Name: EASTMAN KODAK CO GOVERNMENT MARKETS CONTRACTS
Company PO Box:
Company Street Address1: 343 STATE ST
Company Street Address2: ROCHESTER, NY 14650-1115 US
Health Emergency Telephone: (716) 722-5151
Label Required Indicator: Y
Date Label Reviewed: 12/16/1998
Status Code: C
Manufacturer's Label Number:
Date of Label: 12/16/1998
Year Procured: N/K
Organization Code: G
Chronic Hazard Indicator: N/P
Eye Protection Indicator: N/P
Skin Protection Indicator: N/P
Respiratory Protection Indicator: N/P
Signal Word: N/P
Health Hazard:
Contact Hazard:
Fire Hazard:
Reactivity Hazard:

8/8/2002 8:21:45 AM

ENSIGN-BICKFORD CO -- LEAD DIAZIDE

MSDS Safety Information

MSDS Date: 03/12/1993
MSDS Num: CKLHH
Product ID: LEAD DIAZIDE
MFN: 01
Responsible Party
Cage: 96336
Name: ENSIGN-BICKFORD CO
Address: 660 HOPMEADOW STREET
Box: 483
City: SIMSBURY CT 06070-0483
Info Phone Number: 203-843-2276
Emergency Phone Number: 203-658-441
Preparer's Name: T A SHREVE
Review Ind: Y
Published: Y

Contractor Summary

Cage: 96336
Name: ENSIGN-BICKFORD CO
Address: 660 HOPMEADOW STREET
Box: 483
City: SIMSBURY CT 06070-0483
Phone: 1-801-798-8613

Ingredients

Cas: 13424-46-9
RTECS #: OF8650000
Name: LEAD AZIDE (PB(N3)2)
Percent by Wt: 91.5
OSHA PEL: 50 MG/M3 (PB)
ACGIH TLV: 0.15 MG/M3 (PB)

Health Hazards Data

Route Of Entry Inds - Inhalation: YES
Skin: YES
Ingestion: YES
Carcinogenicity Inds - NTP: NO
IARC: NO
OSHA: NO

Effects of Exposure: EYE CONTACT: MAY CAUSE IRRITATION, POSSIBLE CORNEAL
INJURY. SKIN CONTACT: EXPOSURE MAY CAUSE IRRITATION & DERMATITIS.
INHALATION: MAY CAUSE NASAL & RESPIRATORY IRRITATION. INGESTION: MAY BE
FATAL OR C AUSE POISONING IF INGESTED. TOXICITY OF LEAD AZIDE HAS BEEN LINKED
TO AZOMIDE RADICAL AS WELL AS PRESENCE OF LEAD. MAJOR SYMPTOMS OF AZIDE
POISONING ARE SEVERE HYPOTENSION & PARALYSIS. SYMPTOMS OF LEA D POISONING
INCLUDE LOSS OF APPETITE, ANEMIA, SLEEP DISORDERS, & FATIGUE. CHRONIC:
LEAD AZIDE APPEARS ON NAVY LISTING OF OCCUPATIONAL CHEMICAL REPRODUCTIVE
HAZARDS. SEEK CONSULTATION FROM APPROPRIATE HEALTH (EFTS OF OVEREXP)
Explanation Of Carcinogenicity: LEAD OZIDE IS NOT LISTED AS A POTENTIAL
CARCINOGEN BY (NTP) (IARC) (OSHA).
Signs And Symptions Of Overexposure: HLTH HAZ: PROFESSIONALS CONCERNING LATEST
HAZARD LIST INFORMATION AND SAFE HANDLING AND EXPOSURE INFORMATION (FP N).
THRESHOLD LIMIT VALUE: 0.15 MG/M3 AS LEAD (PB) (ACGIH).
First Aid: EYE CONTACT: FLUSH IMMEDIATELY UNDER RUNNING WATER FOR AT LEAST
FIFTEEN MINUTES, SEEK MEDICAL ATTENTION. SKIN CONTACT: FLUSH IMMEDIATELY
UNDER RUNNING WATER FOR AT LEAST FIFTEEN MINUTES. IF SKIN IRRIT ATION OCCURS,
SEEK MEDICAL ATTENTION. INHALATION: MOVE VICTIM TO FRESH AIR. GIVE ARTIFICIAL
RESPIRATION IF BREATHING HAS STOPPED. SEEK MEDICAL ATTENTION IMMEDIATELY.
INGESTION: IF INGESTED, INDUCE VOM ITING IMMEDIATELY BY STICKING FINGER DOWN
VICTIM'S THROAT! SEEK MEDICAL ATTENTION IMMEDIATELY.

Handling and Disposal

Spill Release Procedures: ISOLATE SPILL AREA, KEEP ALL SOURCES OF IGNITION AWAY
FROM SPILL, & EVACUATE ALL NON-ESSENTIAL PERS TO SAFE DISTANT LOCATION.

REMOVE ALL EXPLOSIVES THAT WERE NOT INVOLVED IN SPILL FROM SPILL AREA. LEA D
AZIDE IS EXTREMELY SENSITIVE EXPLOSIVE. IT IS POSSIBLE TO STEP ON LEAD AZIDE
& HAVE IT DETONATE. DO NOT MOVE UNLESS THERE IS CLEAR PATH AWAY FROM
SPILL AREA. SPILLED LEAD AZIDE SHOULD BE (SUPDAT)
Waste Disposal Methods: WASTE LEAD AZIDE SHOULD BE CHEMICALLY DESTROYED USING
20% CERRIC AMMONIUM NITRATE & H*2O KILLING SOLN. THOROUGHLY POUR LIBERAL
AMTS OF KILLING SOLN OVER EXCESS LEAD AZIDE. RSLTG CHEM RXN WILL LIBERATE
HYDRAZOIC ACID (HN*3). USE NIOSH APPRVD SCBA/USE WELL VENT AREA TO PVNT INHAL
OF FUMES. ALTHOUGH RS LTG SOLN IS NOT EXPLOSIVE IT SHOUD BE (OTHER INFO)
Handling And Storage Precautions: HANDLE AND STORE IN ACCORDANCE WITH ALL
APPLICABLE REGULATIONS AND INDUSTRY PRACTICES GOVERNING CLASS A PRIMARY
(INITIATING)/HAZARD CLASS 1.1A EXPLOSIVE (SEE REACTIVITY DATA SECTION).
Other Precautions: LEAD AZIDE WILL ALWAYS BE SHIPPED WET WITH A MINIMUM OF 20%
AQUEOUS ETHANOL (CAS 64-17-5) DENATURED WITH METHANOL (CAS 67-56-1). REFER TO
THE ENCLOSED MATERIAL DATA SHEETS FOR THE PROPERTIES OF THESE MATERIALS IF
APPLICABLE.

Fire and Explosion Hazard Information

Autoignition Temp: =275.C, 527.F
Extinguishing Media: MEDIA SUITABLE FOR SURROUNDING FIRE (FP N). AUTO IGNITION
TEMP: 275C (527F) MINIMUM TEMPERATURE FOR IGNTION IN 5 SECONDS FOR
DEXTRINATED LEAD AZIDE. U S ARMY REFERENCE.
Fire Fighting Procedures: USE NIOSH APPROVED SCBA & FULL PROTECTIVE
EQUIPMENT (FP N). DO NOT FIGHT FIRES INVOLVING LEAD AZIDE! PRODUCT IS A
PRIMARY (INITIATING) EXPLOSIVE AND MAY DETONATE WHEN EXPOSED TO HEAT OR
FLAMES. ISOLAT E THE AFFECTED AREA AND EVACUATE ALL PERSONNEL TO A DISTANT.

SAFE AREA.
Unusual Fire/Explosion Hazard: LEAD AZIDE IS PRIMARY (INITIATING) EXPLO. THIS
PROD IS LIKELY TO DETONATE WHEN EXPOSED TO SHOCK, HEAT, IMPACT, ELECTROSTATIC
DISCHARGE (SPARKS)/FRICTION. PROD SHOULD BE HANDLED ONLY BY QUALIFIED INDIV
IDUALS WHO ARE THOROUGHLY FAMILIAR W/PROPER PRIMARY EXPLOSIVES HANDLING
PROCS. HAZ GASES (LEAD VAP, HYDRAZOIC (TOX INFO)

Control Measures

Respiratory Protection: NIOSH APROVED DUST RESPIRATOR SHOULD BE WORN WHEN
HANDLING DRY LEAD AZIDE. NIOSH APPROVED ORGANIC VAPOR RESPIRATOR SHOULD BE
USED WHEN HANDLING WET LEAD AZIDE.
Ventilation: LOCAL EXHAUST: NONE REC DUE TO EXPLOSION HAZ. SPECIAL: FOR
ADDITIONAL INFO ON LEAD SEE 29 CFR 1910.1025. MECH: EXHAUST VENT REC TO MIN
EMPLOYEE EXPOSURE.
Protective Gloves: BUTYL RUBBER GLOVES.
Eye Protection: ANSI APPROVED CHEMICAL WORKERS GOGGLES (FP N).
Other Protective Equipment: EYE WASH & DELUGE SHWR MTG ANSI DESIGN CRITERIA (FP
N). COTTON COVERALLS TO PROTECT AGAINST EMPLOYEE CONT WLEAD AZIDE; SHOULD BE
REPLACED WHEN CONTAM. CONDUCTIVE FOOTWEAR & FLOORING IS ALSO RECOMMENDED.
Work Hygienic Practices: PHYSICAL DATA: DENSITY: 4.38 GM/CM3.
Supplemental Safety and Health: SPILL PROC: CAREFULLY WIPED UP LIBERALLY USING
SOPON & H*2O SOLN/KILLED W/KILLING SOLN OF 1 PART CERRIC AMMONIUM NITRATE
& 6 PARTS H*2O (APPROX 20%). DISPOSE OF SOPON/H*2O SOLN BY ADDING ABOVE
REFEREN CED KILLING SOLN. TREAT ALL MATL TREATED W/KILLING SOLN AS LEAD (PB)
WASTE. ALWAYS KILL LEAD AZIDE IN (OTHER INFO)

Physical/Chemical Properties

Melt/Freeze Pt: >275.C, 527.F
M.P/F.P Text: EXPLODES

Spec Gravity: 4.38
Solubility in Water: SLIGHT (0.02% @ 18C (64F)
Appearance and Odor: WHITE TO LIGHT BUFF CRYSTALS, ODORLESS.

Reactivity Data

Stability Indicator: YES
Stability Condition To Avoid: DO NOT STORE AT TEMP >66C (150F). ALWAYS SHIP &
STORE BULK LEAD AZIDE WET W/ALCOHOL TO PVNT FREEZING. EXPOS TO SHOCK, HEAT,
SPKS, PRESS/IMPACT MAY RSLT IN (ECOLOGICAL INFO)
Materials To Avoid: COPPER AND COPPER ALLOYS, SILVER, MERCURY, CADMIUM NICKEL,
ACIDS, AND OXIDANTS.
Hazardous Decomposition Products: IN PRESENCE OF MOISURE (H*2O), LEAD AZIDE
REACTS W/COPPER (CU) & COPPER BEARING ALLOYS TO FORM UNSTABLE BY-PRODUCTS.
LEAD AZIDE SHOULD NOT BE MFRD, STORED/LOADED IN COPPER/COPPER ALLOY (TOX
INFO)
Hazardous Polymerization Indicator: NO
Conditions To Avoid Polymerization: WILL NOT OCCUR.

Toxicological Information

Toxicological Information: N/P. HAZ DECOMP PROD: CONTAINERS (I.E. BRASS OR
BRONZE). HAZARADOUS DECOMPOSITION GASES ARE LEAD VAPOR AND HYPRAZOIC ACID
(HN*3). EXPLO HAZ: ACID, & NITROGEN OXIDES (NO*X'S) MAY BE RELEASED WHEN
LEAD AZIDE BURNS OR DETONATES. IF LEAD AZIDE IS EXPOSED TO FIRE AND IT DOES
NOT DETONATE, IT WILL BURN VIGOROUSLY.

Ecological Information

Ecological: N/P. DETONATION. (ENERGY VALUES AS LOW AS 2X10 JOULES HAVE BEEN
SHOWN TO INITIATE LEAD AZIDE W/METAL TO METAL CNTCT IN LAB EXPERIMENTS).

MSDS Transport Information

Transport Information: SHIPPING INFORMATION: SHIPPING NAME: LEAD AZIDE. HAZARD
CLASS: 1.14. UN NO.: 0129. LABEL: EXPLOSIVE. SPECIAL: LEAD AZIDE, WETTED,
FORBIDDEN.

Regulatory Information

Sara Title III Information: SARA 313 NOTIFICATION: "THIS PRODUCT CONTAINS LEAD
& LEAD COMPOUNDS THAT ARE SUBJECT TO THE REPORTING REQUIREMENTS OF
SECTION 313 TITLE III OF THE SUPERFUND AMENDMENT AND REAUTHORIZATION ACT OF
1986 4 0 CR PART 372."
State Regulatory Information: CALIFORNIA PROPOSITION 65 NOTIFICATION: "LEAD
& LEAD COMPOUNDS ARE LISTED ON CALIFORNIA SAFE DRINKING WATER & TOXIC
ENFORCEMENT ACT OF 1986 (PROPOSITION 65) AS A CHEMICAL KNOWN TO THE STATE TO
CAUSE C ANCER. LEAD IS LISTED AS A CHEMICAL KNOWN TO THE STATE TO CAUSE
REPRODUCTIVE TOXICITY."

Other Information

Other Information: CHEM NAME: LEAD AZIDE. CHEM FAMILY: METAL SALT OF INORG
ACID. FORMULA: PB(N3)2. SUPDAT: WELL VENT AREA/USE NIOSH APPRVD SCBA TO
PREVENT INHAL OF HYDRAZOIC ACID (HN*3) FUMES. WASTE DISP METH:TREATED AS
LEAD (PB) WASTE. LEAD WASTE IS HAZ WASTE AS DEFINED UNDER RCRA REGULATIONS,
& MUST BE DISPOSED OF AT PROPERLY PERMITTED TREATMENT/STORAGE/DISPOSAL
FACILITY (TSD). LEAD AZIDE DISPOSAL & ALL RELATED, REGULATED ACTIVITIES,
(INCLUDING BUT NOT LIMITED TO HANDLING, LABELING, PACKAGING, STORAGE, AND
TRANSPORTATION MUST BE PERFORMED IN ACCORDANCE WITH ALL APPLICABLE LOCAL,
STATE, AND FEDERAL LAWS & REG ULATIONS.

HAZCOM Label

Product ID: LEAD DIAZIDE
Cage: 96336
Company Name: ENSIGN-BICKFORD CO
Street: 660 HOPMEADOW STREET
PO Box: 483
City: SIMSBURY CT
Zipcode: 06070-0483
Health Emergency Phone: 203-658-441
Label Required IND: Y
Date Of Label Review: 05/11/2000
Status Code: A
Origination Code: F
Chronic Hazard IND: Y
Eye Protection IND: YES
Skin Protection IND: YES
Signal Word: DANGER
Respiratory Protection IND: YES
Health Hazard: Moderate
Contact Hazard: Moderate
Fire Hazard: Slight
Reactivity Hazard: Severe
Hazard And Precautions: EXPLOSIVE! ACUTE: EYE CONTACT: MAY CAUSE IRRITATION,
POSSIBLE CORNEAL INJURY. SKIN CONTACT: EXPOSURE MAY CAUSE IRRITATION &
DERMATITIS. INHALATION: MAY CAUSE NASAL & RESPIRATORY IRRITATION.
INGESTION: MAY BE FATAL OR CAUSE POISONING IF INGESTED. TOXICITY OFLEAD
AZIDE HAS BEEN LINKED TO AZOMIDE RADICAL AS WELL AS PRESENCE OF LEAD. MAJOR
SYMPTOMS OF AZIDE POISONING ARE SEVERE HYPOTENSION & PARALYSIS . SYMPTOMS
OF LEAD POISONING INCLUDE LOSS OF APPETITE, ANEMIA, SLEEP DISORDERS,&
FATIGUE. CHRONIC: LEAD AZIDE APPEARS ON NAVY LISTING OF OCCUPATIONAL CHEMICAL
REPRODUCTIVE HAZARDS (FP N).

Disclaimer (provided with this information by the compiling agencies): This information is formulated for use by elements of the Department of Defense. The United States of America in no manner whatsoever expressly or implied warrants, states, or intends said information to have any application, use or viability by or to any person or persons outside the Department of Defense nor any person or persons contracting with any instrumentality of the United

States of America and disclaims all liability for such use. Any person utilizing this instruction who is not a military or civilian employee of the United States of America should seek competent professional advice to verify and assume responsibility for the suitability of this information to their particular situation regardless of similarity to a corresponding Department of Defense or other government situation.

```
                                    lead stearate.txt
SPRAYLAT CORP                      -- SC-1073 BLUE
=========================================================
MSDS Safety Information
=========================================================
FSC: 8030
MSDS Date: 01/12/1993
MSDS Num: BWZBJ
LIIN: 00N057955
Product ID: SC-1073 BLUE
MFN: 01
Responsible Party
Cage: 87354
Name: SPRAYLAT CORP
Address: 716 SOUTH COLUMBUS AVE
City: MT VERNON NY 10550
Info Phone Number: 914-699-3030
Emergency Phone Number: 800-424-9300 (CHEMTREC)
Preparer's Name: MICHAEL A SPATH
Published: Y
=========================================================
Contractor Summary
=========================================================
Cage: 87354
Name: SPRAYLAT CORPORATION
Address: 716 SOUTH COLUMBUS AVENUE
City: MT. VERNON NY 10550
Phone: 914-699-3030;310-559-2335
=========================================================
Ingredients
=========================================================
Cas: 56189-09-4
Name: LEAD STEARATE (SARA 313) (CERCLA)
% Wt: <10
OSHA PEL: SEE 1910.1025
ACGIH TLV: 0.15 MG(PB)/M3
------------------------------
Cas: 1317-80-2
RTECS #: VM2940000
Name: RUTILE; (TITANIUM DIOXIDE)
% Wt: <10
OSHA PEL: 10 MG/M3 TDUST Z1A
ACGIH TLV: 10 MG/M3 8990
------------------------------
Name: HLTH HAZ: CONSULT FROM APPROP HLTH PROFESSIONALS CONCERNING LATEST HAZ
  LIST INFO & SAFE HNDLG & EXPOS INFO (FP N).
------------------------------
Name: FIRST AID: BY A PHYSICIAN. CONTACT A PHYSICIAN IMMEDIATELY.
------------------------------
Name: RESP PROT: APPRVD) DURING & AFTER APPLICATN UNLESS AIR MONITORING
  DEMONSTRATES VAP/MIST LEVELS ARE BELOW
------------------------------
Name: RESP PROT: APPLICABLE LIMITS. FOLLOW RESP MFR DIRECTIONS FOR USE.
------------------------------
Name: PROT GLOVES: CONT. WEAR RESIST GLOVES SUCH AS NATRL RUB, NEOPRENE, BUNA
  N/NITRILE.
------------------------------
Name: VENT: NIOSH/MSHA APPROVED RESP TO PREVENT OVEREXPOS. FOR ING 1, SEE OSHA
  STD. 29 CFR 1910-1025.
------------------------------
Name: SPILL PROC: NOTIFY LOCAL HEALTH & POLLUTION CONTROL AGENCIES. CALL
  SPILL RESPONSE TEAMS IF SPILL IS LARGE.
------------------------------
Name: SPILL PROC: DO NOT FLUSH TO SEWER, WATERSHED OR WATERWAY.
                                    Page 1
```

lead stearate.txt

Name: FIRE FIGHT PROC: SAFE DISTANCE OR A PROTECTED LOCATION.

==========

Health Hazards Data

==========

LD50 LC50 Mixture: NONE SPECIFIED BY MANUFACTURER.
Route Of Entry Inds - Inhalation: YES
Skin: YES
Ingestion: YES
Carcinogenicity Inds - NTP: NO
IARC: NO
OSHA: NO
Effects of Exposure: ING 1: CHRONIC OVEREXP OR INGEST MAY CAUSE POSS KIDNEY DMG, CNS DEPRESS/DISORDER, DELAYED EFTS INVOLVING BLOOD, GI, NERV & REPRO SYS, HDCH, NAUS, VOMIT, DIZZ/LOSS OF CONSCIOUSNESS, REPROD SYS DMG IN S OME LAB ANIMALS, TESTICULAR INJURY. MAYCAUSE APPETITE LOSS. INGEST/EXCESSIVE INHAL MAY BE FATAL.
Explanation Of Carcinogenicity: NOT RELEVANT.
Signs And Symptions Of Overexposure: MAY RESULT IN TOXIC LEAD LEVELS IN BODY. SEE OSHA STD 29 CFR 1910.1025. MAY CAUSE NOSE, THROAT & UPPER RESP TRACT IRRIT. SPRAY MIST/VAPS OF SPRAY PAINTS MAY CAUSE IRRIT TO THE EYES, NOSE, THROAT, UPPE R RESP TRACT, MUCOUS MEMBRANES & SKIN. INGEST WILL AT FIRST ACT AS A STIMULANT, FOLLOWED BY SYMP OF MENTAL (SUP DAT)
Medical Cond Aggravated By Exposure: NONE SPECIFIED BY MANUFACTURER.
First Aid: EYES: FLUSH W/LUKE WARM WATER FOR AT LEAST 15 MIN. SEEK MD IMMED. SKIN: FLUSH W/COPIOUS AMTS OF LUKE WARM WATER. REMOVE CONTAM CLTH PROMPTLY. CONT MD IMMED. INHAL: REMOVE EXPOS PERS TO FRESH AIR. REST ORE BRTHG IF REQUIRED. CONT MD IMMED. INGEST: RINSE MOUTH IMMED. GIVE EXPOS PERS 6 TO 8 OUNCES OF LIQUID. (NEVER GIVE ANYTHING BY MOUTH TO UNCONSCIOUS PERS). DO NOT INDUCE VOMIT UNLESS ADVISED

==========

Handling and Disposal

==========

Spill Release Procedures: STAY UPWIND & AWAY FROM SPILL UNLESS WEARING APPROPRIATE PROT EQUIP. STOP &/CONTAIN DISCHARGE IF IT MAY BE DONE SAFELY. KEEP ALL IGNITION SOURCES AWAY. VENT AREA OF SPILL. KEEP OUT OF DRAINS, SEWERS/W ATERWAYS. CONT FIRE AUTH.
Neutralizing Agent: NONE SPECIFIED BY MANUFACTURER.
Waste Disposal Methods: DISPOSE OF PRODUCT IN ACCORDANCE WITH APPLICABLE LOCAL, COUNTY, STATE AND FEDERAL REGULATIONS.
Handling And Storage Precautions: KEEP PROD CONTRS COOL & DRY. USE & STORE THIS PROD W/ADEQUATE VENT. DO NOT SMOKE IN STOR AREAS. KEEP CONTRS TIGHTLY CLOSED WHEN NOT IN USE.
Other Precautions: PERS SHOULD AVOID INHAL OF VAPS/MIST. PERS CONT W/PROD SHOULD BE AVOIDED. CONTRS OF THIS MATL MAY BE HAZ WHEN EMPTIED. EMPTIED CONTRS RETAIN PROD RESIDUES (VAP, LIQUID, &/SOLID), OBSERVE ALL HAZARD PR ECAUTIONS.

==========

Fire and Explosion Hazard Information

==========

Extinguishing Media: CARBON DIOXIDE, DRY CHEMICALS, FOAM OR WATER FOG.
Fire Fighting Procedures: WEAR NIOSH/MSHA APPRVD SCBA & FULL PROT EQUIP (FP N). CLEAR FIRE AREA OF UNPROT PERS. DO NOT ENTER CONFINED SPACE WITHOUT PERMISSION. FIGHT FIRE FROM A
Unusual Fire/Explosion Hazard: NONE SPECIFIED BY MANUFACTURER.

==========

Control Measures

==========

Respiratory Protection: USE NIOSH/MSHA APPRVD DUST MASK/RESPIRATOR IF CONC IS HIGH. BASED ON ING 1, SEE OSHA STD. 29 CFR 1910.1025 FOR APPROP RESP & OTHER PROT EQUIP. DO NOT BRTH MIST/VAPS OF ANY SPRAY PAINT. WEAR APPROP, PR OPERLY FITTED RESP (NIOSH/MSHA
Ventilation: USE AS REQUIRED TO CONTROL VAP/DUST/MIST CONC. AVOID

Page 2

lead stearate.txt

PRLNG/REPEATED BRTH OF VAPS. IF EXPOS EXCEEDS TLV USE A
Protective Gloves: REQUIRED FOR PROLONGED/REPEATED
Eye Protection: ANSI APPRVD CHEM WORKERS GOGGLES (FP N).
Other Protective Equipment: EYEWASH STATIONS & SAFETY SHOWERS SHOULD BE READILY AVAILABLE IN USE & HANDLING AREAS. WEAR APRON TO AVOID SKIN CONT.
Work Hygienic Practices: WASH HANDS THORO BEFORE EATING & USING WASHROOM. REMOVE CONTAMD CLTHG IMMED & DO NOT REUSE UNTIL PROPERLY LAUNDERED.
Supplemental Safety and Health: HLTH HAZ: EXCITEMENT, DEPRESS, DROW, IMPAIRED VISION, ATAXIA, & STUPOR AS INTAKE LEVEL IS INCR. LGE DOSES CAN AFFECT GI TRACT & CNS. ING 2: MAY CAUSE LUNG INJURY, IRRIT, DRYING, CRACKING/DERM ON PRLNG EXPOS TO SKIN. NOTE: LEAD APPEARS ON THE NAVY LISTING OF OCCUPATIONAL CHEMICAL REPRODUCTIVE HAZARDS. SEEK

==========

Physical/Chemical Properties

==========

B.P. Text: >200F,>93C
Spec Gravity: 1.04 (FPN)
Solubility in Water: SOLUBLE
Appearance and Odor: BLUE LIQUID WITH MILD ODOR.

==========

Reactivity Data

==========

Stability Indicator: YES
Stability Condition To Avoid: AVOID EXPOSURE TO SPARKS, OPEN FLAME, HOT SURFACES, & ALL SOURCES OF HEAT & IGNITION.
Materials To Avoid: BASED ON INGREDIENT 2 THIS PRODUCT IS INCOMPATIBLE WITH STRONG OXIDIZERS. MAY CAUSE FIRE OR EXPLOSION ON CONTACT.
Hazardous Decomposition Products: IN PRESENCE OF AIR MAY YIELD CO &/CO*2. BASED ON INGRED 1 MAY FORM LEAD/CHROMIUM OXIDES.
Hazardous Polymerization Indicator: NO
Conditions To Avoid Polymerization: NOT RELEVANT.

==========

Toxicological Information

==========

==========

Ecological Information

==========

==========

MSDS Transport Information

==========

==========

Regulatory Information

==========

==========

Other Information

==========

==========

HAZCOM Label

==========

Product ID: SC-1073 BLUE
Cage: 87354
Company Name: SPRAYLAT CORPORATION
Street: 716 SOUTH COLUMBUS AVENUE
City: MT. VERNON NY
Zipcode: 10550
Health Emergency Phone: 800-424-9300 (CHEMTREC)
Label Required IND: Y
Date Of Label Review: 03/10/1995
Status Code: C
Label Date: 03/10/1995
Origination Code: G
Chronic Hazard IND: Y
Eye Protection IND: YES

Page 3

lead stearate.txt

Skin Protection IND: YES
Signal Word: WARNING
Respiratory Protection IND: YES
Health Hazard: Moderate
Contact Hazard: Slight
Fire Hazard: None
Reactivity Hazard: None
Hazard And Precautions: ACUTE: LOSS OF APPETITE, CNS DEPRESSION, LUNG INJURY, IRRITATION OF EYES, NOSE, THROAT, UPPER RESP TRACT, MUCOUS MEMBRANES & SKIN. INGEST: CAN BE FATAL. CHRONIC: LEAD APPEARS ON THE NAVY OCCUPATION CH EMICAL REPRODUCTIVE HAZARDS LIST (FP N). INGEST: KIDNEY DAMAGE, CNS DEPRESSION/DISORDER. OVEREXPOSURE MAY CAUSE BLOOD & GI EFFECTS, HEADACHE, NAUSEA, VOMITING, DIZZINESS/LOSS OF CONSCIOUSNESS.

==========

Disclaimer (provided with this information by the compiling agencies): This information is formulated for use by elements of the Department of Defense. The United States of America in no manner whatsoever expressly or implied warrants, states, or intends said information to have any application, use or viability by or to any person or persons outside the Department of Defense nor any person or persons contracting with any instrumentality of the United States of America and disclaims all liability for such use. Any person utilizing this instruction who is not a military or civilian employee of the United States of America should seek competent professional advice to verify and assume responsibility for the suitability of this information to their particular situation regardless of similarity to a corresponding Department of Defense or other government situation.

Page 4

CORNELL

Material Safety Data Sheets

Division of Facilities Services

DOD Hazardous Material Information (ANSI Format) For Cornell University Convenience Only

2-NITRODIPHENYLAMINE, 98%, 157171

Section 1 - Product and Company Identification	Section 9 - Physical & Chemical Properties
Section 2 - Compositon/Information on Ingredients	Section 10 - Stability & Reactivity Data
Section 3 - Hazards Identification Including Emergency Overview	Section 11 - Toxicological Information
Section 4 - First Aid Measures	Section 12 - Ecological Information
Section 5 - Fire Fighting Measures	Section 13 - Disposal Considerations
Section 6 - Accidental Release Measures	Section 14 - MSDS Transport Information
Section 7 - Handling and Storage	Section 15 - Regulatory Information
Section 8 - Exposure Controls & Personal Protection	Section 16 - Other Information

The information in this document is compiled from information maintained by the United States Department of Defense (DOD). Anyone using this information is solely reponsible for the accuracy and applicability of this information to a particular use or situation.
Cornell University does not in any way warrant or imply the applicability, viability or use of this information to any person or for use in any situation.

Section 1 - Product and Company Identification
2-NITRODIPHENYLAMINE, 98%, 157171

Product Identification: 2-NITRODIPHENYLAMINE, 98%, 157171
Date of MSDS: 09/07/1993 **Technical Review Date:** 07/07/1994
FSC: 6810 **NIIN: LIIN:** 00N050296
Submitter: N EN
Status Code: C
MFN: 01
Article: N
Kit Part: N

Manufacturer's Information

Manufacturer's Name: ALDRICH CHEMICAL CO INC
Post Office Box: 355
Manufacturer's Address1:
Manufacturer's Address2: MILWAUKEE, WI 53201
Manufacturer's Country: US
General Information Telephone: 414-273-3850
Emergency Telephone: 414-273-3850
Emergency Telephone: 414-273-3850
MSDS Preparer's Name: N/P
Proprietary: N
Reviewed: N
Published: Y
CAGE: 60928
Special Project Code: N

Contractor Information

Contractor's Name: ALDRICH CHEMICAL CO INC
Post Office Box: 355
Contractor's Address1: 1001 WEST ST PAUL AVE
Contractor's Address2: MILWAUKEE, WI 53233
Contractor's Telephone: 414-273-3850
Contractor's CAGE: 60928

Section 2 - Compositon/Information on Ingredients
2-NITRODIPHENYLAMINE, 98%, 157171

Ingredient Name: 2-NITRODIPHENYLAMINE
Ingredient CAS Number: 119-75-5 **Ingredient CAS Code:** M
RTECS Number: RTECS Code: X
=WT: =WT Code:
=Volume: =Volume Code:
>WT: >WT Code:
>Volume: >Volume Code:
<WT: <WT Code:
<Volume: <Volume Code:
% Low WT: % Low WT Code:
% High WT: % High WT Code:
% Low Volume: % Low Volume Code:
% High Volume: % High Volume Code:
% Text: 98
% Enviromental Weight:
Other REC Limits: N/K
OSHA PEL: N/K (FP N) **OSHA PEL Code:** M
OSHA STEL: OSHA STEL Code:
ACGIH TLV: N/K (FP N) **ACGIH TLV Code:** M
ACGIH STEL: N/P **ACGIH STEL Code:**
EPA Reporting Quantity:
DOT Reporting Quantity:

Ozone Depleting Chemical: N

Section 3 - Hazards Identification, Including Emergency Overview
2-NITRODIPHENYLAMINE, 98%, 157171

Health Hazards Acute & Chronic: ACUTE:MAY BE HARMFUL BY INHALATION, INGESTION OR SKIN ABSORPTION. CAUSES EYE & SKIN IRRITATION. MATERIAL IS IRRITATING TO MUCOUS MEMBRANES & UPPER RESPIRATORY TRACT. TO THE BEST OF MFR'S KNOWLEDGE, TH E CHEMICAL, PHYSICAL & TOXICOLOGICAL PROPERTIES HAVE NOT BEEN THOROUGHLY INVESTIGATED.

Signs & Symptoms of Overexposure:
SEE HEALTH HAZARDS.

Medical Conditions Aggravated by Exposure:
NONE SPECIFIED BY MANUFACTURER.

LD50 LC50 Mixture: NONE SPECIFIED BY MANUFACTURER.

Route of Entry Indicators:
- **Inhalation:** YES
- **Skin:** YES
- **Ingestion:** YES

Carcenogenicity Indicators
- **NTP:** NO
- **IARC:** NO
- **OSHA:** NO

Carcinogenicity Explanation: NOT RELEVANT

Section 4 - First Aid Measures
2-NITRODIPHENYLAMINE, 98%, 157171

First Aid:
EYES:IMMEDIATELY FLUSH W/COPIOUS AMOUNTS OF WATER FOR AT LEAST 15 MINUTES. SKIN:IMMEDIATELY WASH W/SOAP & COPIOUS AMOUNTS OF WATER. WASH CONTAMINATED CLOTHING BEFORE REUSE. INHAL:REMOVE TO FRESH AIR. IF NOT BREATHING GIVE ARTIFICIAL RESPIRATION. IF BREATHING IS DIFFICULT, GIVE OXYGEN. INGEST:WASH OUT MOUTH W/WATER PROVIDED PERSON IS CONSCIOUS. CALL MD.

Section 5 - Fire Fighting Measures
2-NITRODIPHENYLAMINE, 98%, 157171

Fire Fighting Procedures:
USE NIOSH/MSHA APPROVED SCBA & FULL PROTECTIVE EQUIPMENT (FP N).
Unusual Fire or Explosion Hazard:
EMITS TOXIC FUMES UNDER FIRE CONDITIONS.
Extinguishing Media:

WATER SPRAY, CARBON DIOXIDE, DRY CHEMICAL POWDER OR APPROPRIATE FOAM.
Flash Point: Flash Point Text: N/K

Autoignition Temperature:
Autoignition Temperature Text: N/A
Lower Limit(s): N/K
Upper Limit(s): N/K

Section 6 - Accidental Release Measures
2-NITRODIPHENYLAMINE, 98%, 157171

Spill Release Procedures:
WEAR NIOSH/MSHA APPROVED SCBA, RUBBER BOOTS & HEAVY RUBBER GLOVES. SWEEP UP, PLACE IN A BAG & HOLD FOR WASTE DISPOSAL. AVOID RAISING DUST. VENTILATE AREA & WASH SPILL SITE AFTER MATERIAL PICKUP IS COM PLETE.

Section 7 - Handling and Storage
2-NITRODIPHENYLAMINE, 98%, 157171

Handling and Storage Precautions:

Other Precautions:

Section 8 - Exposure Controls & Personal Protection
2-NITRODIPHENYLAMINE, 98%, 157171

Repiratory Protection:
NIOSH/MSHA APPROVED RESPIRATOR.
Ventilation:
MECHANICAL EXHAUST REQUIRED.
Protective Gloves:
RUBBER GLOVES.
Eye Protection: ANSI APPROVD CHEM WORKER GOGGLES (FP N).
Other Protective Equipment: EMERGENCY EYE WASH AND DELUGE SHOWER WHICH MEET ANSI DESIGN CRITERIA (FP N).
Work Hygenic Practices: WASH THOROUGHLY AFTER HANDLING.
Supplemental Health & Safety Information: NONE SPECIFIED BY MANUFACTURER.

Section 9 - Physical & Chemical Properties
2-NITRODIPHENYLAMINE, 98%, 157171

HCC:
NRC/State License Number:
Net Property Weight for Ammo:
Boiling Point: Boiling Point Text: N/K
Melting/Freezing Point: Melting/Freezing Text: >165F,>74C
Decomposition Point: Decomposition Text: N/K
Vapor Pressure: N/K **Vapor Density:** 10.7
Percent Volatile Organic Content:
Specific Gravity: N/K

Volatile Organic Content Pounds per Gallon:
pH: N/K
Volatile Organic Content Grams per Liter:
Viscosity: N/P
Evaporation Weight and Reference: N/K
Solubility in Water: N/K
Appearance and Odor: RED-ORANGE CRYSTALS.
Percent Volatiles by Volume: N/K
Corrosion Rate: N/K

Section 10 - Stability & Reactivity Data
2-NITRODIPHENYLAMINE, 98%, 157171

Stability Indicator: YES
Materials to Avoid:
STRONG OXIDIZING AGENTS, STRONG ACIDS, STRONG BASES.
Stability Condition to Avoid:
NONE SPECIFIED BY MANUFACTURER.
Hazardous Decomposition Products:
TOXIC FUMES OF: CARBON MONOXIDE, CARBON DIOXIDE, NITROGEN OXIDES.
Hazardous Polymerization Indicator: NO
Conditions to Avoid Polymerization:
NOT RELEVANT

Section 11 - Toxicological Information
2-NITRODIPHENYLAMINE, 98%, 157171

Toxicological Information:
N/P

Section 12 - Ecological Information
2-NITRODIPHENYLAMINE, 98%, 157171

Ecological Information:
N/P

Section 13 - Disposal Considerations
2-NITRODIPHENYLAMINE, 98%, 157171

Waste Disposal Methods:
DISSOLVE OR MIX THE MATERIAL W/COMBUSTIBLE SOLVENT & BURN IN A CHEMICAL INCINERATOR EQUIPPED W/AFTERBURNER & SCRUBBER. OBSERVE ALL FEDERAL, STATE & LOCAL ENVIRONMENTAL REGULATIONS.

Section 14 - MSDS Transport Information
2-NITRODIPHENYLAMINE, 98%, 157171

Transport Information:
N/P

Section 15 - Regulatory Information
2-NITRODIPHENYLAMINE, 98%, 157171

SARA Title III Information:
N/P
Federal Regulatory Information:
N/P
State Regulatory Information:
N/P

Section 16 - Other Information
2-NITRODIPHENYLAMINE, 98%, 157171

Other Information:
N/P

HAZCOM Label Information

Product Identification: 2-NITRODIPHENYLAMINE, 98%, 157171
CAGE: 60928
Assigned Individual: N
Company Name: ALDRICH CHEMICAL CO INC
Company PO Box: 355
Company Street Address1: 1001 WEST ST PAUL AVE
Company Street Address2: MILWAUKEE, WI 53233 US
Health Emergency Telephone: RUBBER GLOVES.
Label Required Indicator: Y
Date Label Reviewed: 07/07/1994
Status Code: C
Manufacturer's Label Number:
Date of Label: 07/07/1994
Year Procured: N/K
Organization Code: G
Chronic Hazard Indicator: N
Eye Protection Indicator: N/P
Skin Protection Indicator: N/P
Respiratory Protection Indicator: N/P
Signal Word: CAUTION
Health Hazard: Slight
Contact Hazard: Slight
Fire Hazard: None
Reactivity Hazard: None

8/9/2002 8:34:55 AM

Appendix E Contents

GB Material Balances for BGCAPP .....See Appendix C

Appendix F Contents

RD&D Permit Pre-Application Meeting Documentation

Blue Grass Chemical
Stockpile Outreach Office

RCRA Research, Development & Demonstration

Pre-application Public Meeting

January 22, 2004

Eastern Kentucky University

Carl D. Perkins Conference Center

Kit Carson Drive, Richmond, KY

6-8 p.m.

NEWSPAPER/BROADCAST ADS

The Department of Defense's Program Manager for Assembled Chemical Weapons Alternatives and Bechtel Parsons Blue Grass Invite Discussion

On a permit application to allow construction, systemization and pilot testing of the Blue Grass Chemical Agent - Destruction Pilot Plant at the Blue Grass Army Depot.

The Program Manager for Assembled Chemical Weapons Alternatives (PMACWA) and its systems contractor Bechtel Parsons Blue Grass (BPBG) plan to build and pilot test a treatment, storage, and disposal facility at the U.S. Army Blue Grass Army Depot (BGAD), Kentucky. This facility will pilot test the destruction of chemical weapons containing blister and nerve agents. BPBG and the Army (the "Applicants") plan to submit an application to the Kentucky Department for Environmental Protection (KDEP) for a Research Development and Demonstration (RD&D) permit to build and operate the full-scale pilot plant.

The Applicants will conduct a pilot test with KDEP oversight of the proposed neutralization system and on the basis of the results will decide whether to treat the remainder of the chemical weapons stockpile in the proposed neutralization system.

The Applicants will submit its permit application to KDEP in March 2004. This public availability session will be held to explain the proposed neutralization system to the public and solicit public input before submitting the application.

The public is invited to obtain information and ask questions about the facility and the permitting process at a meeting to be held as follows:

PUBLIC MEETING

Thursday, January 22, 2004
Carl D. Perkins Conference Center
Eastern Kentucky University
521 Lancaster Avenue
Richmond, KY 40475
6 p.m. to 8 p.m.

PURPOSE OF THE MEETING

The Applicants must obtain a Research Development and Demonstration Permit under the Resource Conservation and Recovery Act (RCRA) from KDEP in order to build and operate the plant. The first step in that process is a "pre-application" public meeting, which will be the first of many opportunities for the public to participate. At the meeting, the Applicants will provide information about the proposed facility, to include:

- Location and general description
- Processes involved in operations
- Types of wastes generated and managed
- Waste minimization and pollution control measures
- The permitting process

BACKGROUND

The Blue Grass Army Depot stores chemical weapons comprised of rockets and projectiles containing 523 tons of blister and nerve agents. The ACWA program is responsible for destroying these weapons in accordance with Public Law 107-248. Bechtel Parsons Blue Grass will design, build and pilot test a plant to destroy the weapons and will be a co-applicant for the RD&D RCRA permit, along with the depot.

DESCRIPTION OF PROPOSED FACILITY

The Department of Defense is proposing to build the neutralization system adjacent to the chemical limited area at BGAD. The munitions will be transferred from the storage igloos to the neutralization system. The chemical agent and energetics will be treated using neutralization followed by supercritical water oxidation (SCWO). Here is how that process works:

- Munitions are disassembled by modified reverse assembly. The chemical agent and energetics are separated. Agent and energetics are chemically decomposed and neutralized by caustic or water hydrolysis. The resulting chemical compounds are known as hydrolysates.

- The agent and energetic hydrolysates are destroyed using SCWO units. SCWO subjects the hydrolysate to very high temperatures and pressures, breaking them down into carbon dioxide, water and salts.
- Metal parts are thermally decontaminated by heating to 1,000 degrees Fahrenheit for a minimum of 15 minutes.
- Solid and liquid effluents are recycled or tested prior to disposal in permitted landfills. Gas effluents are recycled or filtered before released to the atmosphere. The water will be recycled into the pilot plant facility and reused as part of the destruction process.

In order to encourage an open dialogue, the format for the meeting will be poster session followed by a presentation and question and answer session. Citizens are encouraged to ask questions of the individuals who will be available at each of the poster stations.

QUESTIONS? SPECIAL NEEDS? WANT MORE INFORMATION?

If you need special access or other assistance to participate in the meeting, please contact the offices listed below at least three working days in advance of the meeting.

If you have any questions about the meeting, please contact:

Dave Easter

Public Affairs Officer

Blue Grass Army Depot

2091 Kingston Highway

Richmond, KY 40475-5008

859-625-6221

dave.easter@bluegrass.army.mil

Richard Sloan

Public Affairs Officer

Blue Grass Chemical Activity

2091 Kingston Highway

Richmond, KY 40475-5008

859-625-6897

Richard.sloan@apgea.army.mil

Mickey Morales

Bechtel Parsons Blue Grass
301 Highland Park Drive
Richmond, KY 40475
859-625-1291
mlmorale@bechtel.com

Sandra Plant
Blue Grass Chemical Stockpile Outreach Office
370 Highland Park Drive, Suite 2
Richmond, KY 40475
859-626-8944
swplant@bechtel.com

The meeting location is wheelchair accessible.

RCRA Public Meeting-Ad Cost Schedule
Thursday, January 22, 2004.
6-8 p.m.
Eastern Kentucky University – Carl D. Perkins Conference
Kit Carson Drive
Richmond Kentucky 40475

DISPLAY ADVERTISEMENTS/COSTS

Name of Publication	Publication Dates	Contact Information	Ad Information	Cost	Circulation #'	Completed
The Richmond Register Richmond, Kentucky	17 Dec.	Sue Curtis Phone: (859) 623-1669 Fax: (859) 623-2337	Display Ad (3x14) Classified Legal Display Ad (2x14) First ad will be full price, Second ad Pick-up Rate discounted	$325.36 $335.16 ($227.64)	10,000	
Lexington Herald-Leader Lexington, KY	17 Dec.	Christine Templin Phone: (859) 231-1361 Fax: (859) 231-1371 ctemplin@herald-leader.com	Display Ad Community Ad Classified Legal Ad	$1,202.00 $1,200.00	250,000	
Berea Citizen Berea, Kentucky	18 Dec.	Kristi Johnson Phone: (859) 986-0959 Fax: (859) 986-0960	Display Ad (2x18) Classified Legal Ad (2x18)	$198.00 $198.00	3,500	
Wallingford Richmond, Kentucky	18, 19 Dec.	Todd Chaney Phone: (859) 623-1386 coyote@chpl.net	10 -(30) second ads on 5 stations WEKY-Richmond WCYO-Regional WLFX-Richmond Berea WIRB-Irvine WKXO-Berea	$24.00 per x 5 ads 10-30 second spots		

The Department of Defense's Program Manager for Assembled Chemical Weapons Alternatives and Bechtel Parsons Blue Grass invite discussion on a permit application to allow construction, systemization and pilot testing of the Blue Grass Chemical Agent - Destruction Pilot Plant at the Blue Grass Army Depot.

The Program Manager for Assembled Chemical Weapons Alternatives (PMACWA) and its systems contractor Bechtel Parsons Blue Grass (BPBG) plan to build and pilot test a treatment, storage, and disposal facility at the U.S. Army Blue Grass Army Depot (BGAD), Kentucky. This facility will pilot test the destruction of chemical weapons containing blister and nerve agents. BPBG and the Army (the "Applicants") plan to submit an application to the Kentucky Department for Environmental Protection (KDEP) for a Research Development and Demonstration (RD&D) permit to build and operate the full-scale pilot plant.

The Applicants will conduct a pilot test with KDEP oversight of the proposed neutralization system and on the basis of the results will decide whether to treat the remainder of the chemical weapons stockpile in the proposed neutralization system.

The Applicants will submit its permit application to KDEP in March 2004. This public availability session will be held to explain the proposed neutralization system to the public and solicit public input before submitting the application. The public is invited to obtain information and ask questions about the facility and the permitting process at a meeting to be held as follows:

PUBLIC MEETING

Thursday, January 22, 2004
Carl D. Perkins Conference Center
Eastern Kentucky University
Kit Carson Drive
Richmond, KY 40475
6 p.m. to 8 p.m.

PURPOSE OF THE MEETING

The Applicants must obtain a Research Development and Demonstration Permit under the Resource Conservation and Recovery Act (RCRA) from KDEP in order to build and operate the plant. The first step in that process is a "pre-application" public meeting, which will be the first of many opportunities for the public to participate. At the meeting, the Applicants will provide information about the proposed facility, to include:

- Location and general description
- Processes involved in operations
- Types of wastes generated and managed
- Waste minimization and pollution control measures
- The permitting process

BACKGROUND

The Blue Grass Army Depot stores chemical weapons comprised of rockets and projectiles containing 523 tons of blister and nerve agents. The ACWA program is responsible for destroying these weapons in accordance with Public Law 107-248. Bechtel Parsons Blue Grass will design, build and pilot test a plant to destroy the weapons, and will be a co-applicant for the RD&D RCRA permit, along with the depot.

DESCRIPTION OF PROPOSED FACILITY

The Department of Defense is proposing to build the neutralization system adjacent to the chemical limited area at BGAD. The munitions will be transferred from the storage igloos to the neutralization system. The chemical agent and energetics will be treated using neutralization followed by supercritical water oxidation (SCWO). Here is how that process works:

- Munitions are disassembled by modified reverse assembly. The chemical agent and energetic are separated. Agent and energetics are chemically decomposed and neutralized by caustic or water hydrolysis. The resulting chemical compounds are known as hydrolysates.
- The agent and energetic hydrolysates are destroyed using SCWO units. SCWO subjects the hydrolysate to very high temperatures and pressures, breaking them down into carbon dioxide, water and salts.
- Metal parts are thermally decontaminated by heating to 1,000 degrees Fahrenheit for a minimum of 15 minutes.
- Solid and liquid effluents are recycled or tested prior to disposal in permitted landfills. Gas effluents are recycled or filtered before release to the atmosphere. The water will be recycled into the pilot plant facility and reused as part of the destruction process.

In order to encourage an open dialogue, the format for the meeting will be poster session followed by a presentation and question and answer session. Citizens are encouraged to ask questions of the individuals who will be available at each of the poster stations.

QUESTIONS? SPECIAL NEEDS? WANT MORE INFORMATION?

If you need special access or other assistance to participate in the meeting, please contact the offices listed below at least three working days in advance of the meeting.

If you have any questions about the meeting, please contact:

Dave Easter
Public Affairs Officer
Blue Grass Army Depot
2091 Kingston Highway
Richmond, KY 40475-5008
859-625-6221
dave.easter@bluegrass.army.mil

Richard Sloan
Public Affairs Officer
Blue Grass Chemical Activity
2091 Kingston Highway
Richmond, KY 40475-5008
859-625-6897
Richard.Sloan@apgea.army.mil

Mickey Morales
Bechtel Parsons Blue Grass
301 Highland Park Drive
Richmond, KY 40475
859-625-1291
mimorale@bechtel.com

Sandra Plant
Blue Grass Chemical Stockpile Outreach Office
370 Highland Park Drive, Suite 2
Richmond, KY 40475
859-626-8944
swplant@bechtel.com

The meeting location is wheelchair accessible

Richmond Register 12/17/03 Page A9

Lexington Herald - Leader December 11, 2003

The Department of Defense's Program Manager for Assembled Chemical Weapons Alternatives and Bechtel Parsons Blue Grass Invite Discussion

On a permit application to allow construction, systemization and pilot testing of the Blue Grass Chemical Agent - Destruction Pilot Plant at the Blue Grass Army Depot.

The Program Manager for Assembled Chemical Weapons Alternatives (PMACWA) and its systems contractor Bechtel Parsons Blue Grass (BPBG) plan to build and pilot test a treatment, storage, and disposal facility at the U.S. Army Blue Grass Army Depot (BGAD), Kentucky. This facility will pilot test the destruction of chemical weapons containing blister and nerve agents. BPBG and the Army (the "Applicants") plan to submit an application to the Kentucky Department for Environmental Protection (KDEP) for a Research Development and Demonstration (RD&D) permit to build and operate the full-scale pilot plant.

The Applicants will conduct a pilot test with KDEP oversight of the proposed neutralization system and on the basis of the results will decide whether to treat the remainder of the chemical weapons stockpile in the proposed neutralization system.

The Applicants will submit its permit application to KDEP in March 2004. This public availability session will be held to explain the proposed neutralization system to the public and solicit public input before submitting the application.

The public is invited to obtain information and ask questions about the facility and the permitting process at a meeting to be held as follows:

PUBLIC MEETING
Thursday, January 22, 2004
Carl D. Perkins Conference Center
Eastern Kentucky University
Kit Carson Drive
Richmond, KY 40475
6 p.m. to 8 p.m.

PURPOSE OF THE MEETING

The Applicants must obtain a Research Development and Demonstration Permit under the Resource Conservation and Recovery Act (RCRA) from KDEP in order to build and operate the plant. The first step in that process is a "pre-application" public meeting, which will be the first of many opportunities for the public to participate. At the meeting, the Applicants will provide information about the proposed facility, to include:

* Location and general description
* Types of wastes generated and managed
* The permitting process
* Processes involved in operations
* Waste minimization and pollution control measures

BACKGROUND

The Blue Grass Army Depot stores chemical weapons comprised of rockets and projectiles containing 523 tons of blister and nerve agents. The ACWA program is responsible for destroying these weapons in accordance with Public Law 107-248. Bechtel Parsons Blue Grass will design, build and pilot test a plant to destroy the weapons and will be a co-applicant for the RD&D RCRA permit, along with the depot.

DESCRIPTION OF PROPOSED FACILITY

The Department of Defense is proposing to build the neutralization system adjacent to the chemical limited area at BGAD. The munitions will be transferred from the storage igloos to the neutralization system. The chemical agent and energetics will be treated using neutralization followed by supercritical water oxidation (SCWO). Here is how that process works:

* Munitions are disassembled by modified reverse assembly. The chemical agent and energetics are separated. Agent and energetics are chemically decomposed and neutralized by caustic or water hydrolysis. The resulting chemical compounds are known as hydrolysates.
* The agent and energetic hydrolysates are destroyed using SCWO units. SCWO subjects the hydralysate to very high temperatures and pressures, breaking them down into carbon dioxide, water and salts.
* Metal parts are thermally decontaminated by heating to 1,000 degrees Fahrenheit for a minimum of 15 minutes.
* Solid and liquid effluents are recycled or tested prior to disposal in permitted landfills. Gas effluents are recycled or filtered before release to the atmosphere. The water will be recycled into the pilot plant facility and reused as part of the destruction process.

In order to encourage an open dialogue, the format for the meeting will be poster session followed by a presentation and question and answer session. Citizens are encouraged to ask questions of the individuals who will be available at each of the poster stations.

QUESTIONS? SPECIAL NEEDS? WANT MORE INFORMATION?

If you need special access or other assistance to participate in the meeting, please contact the offices listed below at least three working days in advance of the meeting.

If you have any questions about the meeting, please contact:

Dave Easter
Public Affairs Officer
Blue Grass Army Depot
2091 Kingston Highway
Richmond, KY 40475-5008
859-625-6221
dave.easter@bluegrass.army.mil

Richard Sloan
Public Affairs Officer
Blue Grass Chemical Activity
2091 Kingston Highway
Richmond, KY 40475-5008
859-625-6307
[illegible]

Mickey Morales
Bechtel Parsons Blue Grass
301 Highland Park Drive
Richmond, KY 40475
859-625-1291
mlmorale@bechtel.com

Sandra Plant
Blue Grass Chemical Stockpile Outreach Office
370 Highland Park Drive, Suite 2
Richmond, KY 40475
859-626-8944
swplant@bechtel.com

The meeting location is wheelchair accessible

The Department of Defense's Program Manager for Assembled Chemical Weapons Alternatives and Bechtel Parsons Blue Grass Invite Discussion

On a permit application to allow construction, systemization and pilot testing of the Blue Grass Chemical Agent - Destruction Pilot Plant at the Blue Grass Army Depot.

The Program Manager for Assembled Chemical Weapons Alternatives (PMACWA) and its systems contractor Bechtel Parsons Blue Grass (BPBG) plan to build and pilot test a treatment, storage, and disposal facility at the U.S. Army Blue Grass Army Depot (BGAD), Kentucky. This facility will pilot test the destruction of chemical weapons containing blister and nerve agents. BPBG and the Army (the "Applicants") plan to submit an application to the Kentucky Department for Environmental Protection (KDEP) for a Research Development and Demonstration (RD&D) permit to build and operate the full-scale pilot plant.

The Applicants will conduct a pilot test with KDEP oversight of the proposed neutralization system and on the basis of the results will decide whether to treat the remainder of the chemical weapons stockpile in the proposed neutralization system.

The Applicants will submit its permit application to KDEP in March 2004. The public availability session will be held to explain the proposed neutralization system to the public and solicit public input before submitting the application.

The public is invited to obtain information and ask questions about the facility and the permitting process at a meeting to be held as follows:

PUBLIC MEETING

Thursday, January 22, 2004

Carl D. Perkins Conference Center

Eastern Kentucky University

Kit Carson Drive, Richmond, Kentucky 40475

6 to 8 p.m.

PURPOSE OF THE MEETING

The Applicants must obtain a Research Development and Demonstration Permit under the Resource Conservation and Recovery Act (RCRA) from KDEP in order to build and operate the plant. The first step in that process is a "pre-application" public meeting, which will be the first of many opportunities for the public to participate. At the meeting, the Applicants will provide information about the proposed facility, to include:

- Location and general description
- Processes involved in operations
- Types of wastes generated and managed
- Waste minimization and pollution control measures
- The permitting process

BACKGROUND

The Blue Grass Army Depot stores chemical weapons comprised of rockets and projectiles containing 523 tons of blister and nerve agents. The ACWA program is responsible for destroying these weapons in accordance with Public Law 107-248. Bechtel Parsons Blue Grass will design, build and pilot test a plant to destroy the weapons and will be a co-applicant for the RD&D RCRA permit, along with the depot.

DESCRIPTION OF PROPOSED FACILITY

The Department of Defense is proposing to build the neutralization system adjacent to the chemical limited area at BGAD. The munitions will be transferred from the storage igloos to the neutralization system. The chemical agent and energetics will be treated using neutralization followed by supercritical water oxidation (SCWO). Here is how that process works:

- Munitions are disassembled by modified reverse assembly. The chemical agent and energetics are separated. Agent and energetics are chemically decomposed and neutralized by caustic or water hydrolysis. The resulting chemical compounds are known as hydrolysates.

- The agent and energetic hydrolysates are destroyed using SCWO units. SCWO subjects the hydrolysate to very high temperatures and pressures, breaking them down into carbon dioxide, water and salts.

- Metal parts are thermally decontaminated by heating to 1,000 degrees Fahrenheit for a minimum of 15 minutes.

- Solid and liquid effluents are recycled or tested prior to disposal in permitted landfills. Gas effluents are recycled or filtered before released to the atmosphere. The water will be recycled into the pilot plant facility and reused as part of the destruction process.

In order to encourage an open dialogue, the format for the meeting will be poster session followed by a presentation and question and answer session. Citizens are encouraged to ask questions of the individuals who will be available at each of the poster stations.

QUESTIONS? SPECIAL NEEDS? WANT MORE INFORMATION?

If you need special access or other assistance to participate in the meeting, please contact the offices listed below at least three working days in advance of the meeting.

If you have any questions about the meeting, please contact:

Dave Easter
Public Affairs Officer
Blue Grass Army Depot
2091 Kingston Highway
Richmond, KY 40475-5008
859-625-6224
dave.easter@bluegrass.army.mil

Richard Sloan
Public Affairs Officer
Blue Grass Chemical Activity
2091 Kingston Highway
Richmond, KY 40475-5008
859-625-6897
Richard.sloan@apgea.army.mil

Mickey Morales
Bechtel Parsons Blue Grass
301 Highland Park Drive
Richmond, KY 40475
859-625-1291
mlmorale@bechtel.com

Sandra Plant
Blue Grass Chemical Stockpile Outreach Office
370 Highland Park Drive, Suite 2
Richmond, KY 40475
859-626-8944
swplant@bechtel.com

The meeting location is wheelchair accessible.

Berea Citizen Dec 18, 2003, Pg. A9

BGCAPP PUBLIC MEETING ANNOUNCEMENT

CITIZENS OF MADISON COUNTY AND THE SURROUNDING COMMUNITY ARE ENCOURAGED TO ATTEND A MEETING TO DISCUSS STATE ENVIRONMENTAL PERMITS NEEDED TO BEGIN CONTRUCTION OF THE BLUE GRASS CHEMICAL AGENT DESTRUCTION PILOT PLANT TO BE LOCATED AT THE BLUE GRASS ARMY DEPOT.

THE MEETING WILL BE HELD THURSDAY, JANUARY TWENTY-SECOND FROM SIX TO EIGHT P.M. AT EASTERN KENTUCKY UNIVERSITY'S PERKINS CENTER LOCATED ON KIT CARSON DRIVE.

FOR FURTHER INFORMATION, PLEASE CALL 626-8944.

TRI-CITY AM
P.O. BOX 281
IRVINE, KENTUCKY 40336

606-723-5138

****
* S T A T E M E N T *
****

Bechtel-Parsons Blue Grass
Accounts Payable
301 Highland Park Drive
Richmond KY 40475

625-129-1291

Date
12/31/03

Client
Number
1 - 668

Bill Cycle: Monthly Sales Staff # 10: Todd Chaney

Ref #	Posted	Qty	Description	Gross	Agy Disc	Tax	Amount	Balance
120584	12/31	25	TRI--AM Commercials	150.00		0.00	150.00	150.00

Balance Due: $150.00

Payment due: 01/31/04

Miguel L Morales
Miguel L Morales
144808
249155 850-P7

Last Pymt	Aging Analysis: 0-30	31-60	61-90	91-120	121+ Days
00/00	$150.00	$0.00	$0.00	$0.00	$0.00

WEKY-RICHMOND WIRV-IRVINE WKXO-BEREA

****
* Affidavit of Performance *
****

Radio Station TRI-CITY AM
P. O. Box 281
Irvine KY 40336

Invoice Number: 120584
Billing Type : M
Acct Exec : Todd Chaney
Commercial Length: 30
State of Kentucky)
)SS:
City of Irvine)

Bechtel-Parsons Blue Grass
301 Highland Park Drive
Richmond KY 40475

Client # 668
Bechtel-Parsons BlueGrassCommercials

Order # 1

Before me, a Notary Public, personally appeared Kelly T Wallingford
who affirms
that he is President of Radio Station TRI-CITY AM, and that
broadcasts were made during the period: 12/01/03 - 12/31/03.

Date	Times					
Dec 18	10:13A	10:24A	11:23A	1:13P	1:24P	2:13P
Dec 18	3:12P	3:24P	3:50P	4:12P	4:36P	5:21P
Dec 19	6:49A	7:37A	8:12A	9:13A	10:13A	11:13A
Dec 19	1:13P	2:13P	3:12P	4:13P	5:12P	5:37P
Dec 19	6:37P					

Gross Invoice: $150.00 plus Sales Tax: 0.00
DUE DATE: 01/31/04 NET AMOUNT DUE: $150.00

I certify that the above units were aired within 10 minutes
of the times listed.

Signed: Kelly T Wallingford

Affirmed this 06 Day of January, 2004
In testimony whereof I have set my Hand and Seal the day and year aforesaid.
My commission expires 06/06/2004

Wanda G Brooks
Notary Public

****
* Affidavit of Performance *
****

Radio Station WLFX-FM
P.O. Box 281
Irvine, KY 40336

Invoice Number: 120375
Billing Type : M
Acct Exec : Todd Chaney
Commercial Length: 30
State of Kentucky)
)SS:
City of Irvine)

Bechtel-Parsons Blue Grass
301 Highland Park Drive
Richmond KY 40475

Client # 515
Bechtel-Parsons BlueGrassCommercials

Order # 1

Before me, a Notary Public, personally appeared Kelly T Wallingford, who affirms that he is President of Radio Station WLFX-FM, and that broadcasts were made during the period: 12/01/03 - 12/31/03.

Date	Times					
Dec 18	10:22A	10:43A	11:41A	11:54A	12:56P	1:54P
Dec 18	3:15P	3:57P	4:43P	5:27P	6:13P	6:55P
Dec 19	6:27A	7:15A	7:56A	8:57A	10:21A	10:54A
Dec 19	11:42A	1:21P	2:42P	3:17P	4:14P	4:57P
Dec 19	6:15P					

Total: 25 at 0.00 each.
Gross Invoice: $0.00 plus Sales Tax: 0.00
DUE DATE: N/A NET AMOUNT DUE: $0.00

I certify that the above units were aired within 10 minutes of the times listed.

Signed: [signature]

firmed this 06 Day of January, 2004
... testimony whereof I have set my Hand and Seal the day and year aforesaid.
My commission expires 06/06/2004

Wanda G. Bowles
Notary Public

****

* Affidavit of Performance *
****

Radio Station WCYO-FM
P.O. Box 281
Irvine, KY 40336

Invoice Number: 120734
Billing Type : M
Acct Exec : Todd Chaney
Commercial Length: 30
State of Kentucky)
)SS:
City of Irvine)

Bechtel-Parsons Blue Grass
301 Highland Park Drive
Richmond KY 40475

Client # 539
Bechtel-Parsons BlueGrassCommercials

Order # 1

Before me, a Notary Public, personally appeared Kelly T Wallingford, who affirms that he is President of Radio Station WCYO-FM, and that broadcasts were made during the period: 12/01/03 - 12/31/03.

Date	Times					
Dec 18	10:22A	11:22A	12:25P	1:22P	2:22P	2:56P
Dec 18	3:34P	4:26P	4:57P	5:43P	6:26P	6:56P
Dec 19	6:13A	6:39A	7:22A	8:22A	10:22A	11:22A
Dec 19	11:56A	1:22P	2:22P	3:27P	4:27P	4:57P
Dec 19	6:26P					

Total: 25 at 0.00 each.
Gross Invoice: $0.00 plus Sales Tax: 0.00
DUE DATE: N/A NET AMOUNT DUE: $0.00

I certify that the above units were aired within 10 minutes of the times listed.

Signed: [signature]

Affirmed this 06 Day of January, 2004

In testimony whereof I have set my Hand and Seal the day and year aforesaid.

My commission expires 06/06/2004

Wanda G. Bowles
Notary Public

PUBLIC MEETING ANNOUNCEMENT

Regarding the Destruction of Chemical Weapons Stored at the Blue Grass Army Depot

Thursday, January 22, 2004
6-8 p.m.
Carl D. Perkins Conference Center
Eastern Kentucky University
Kit Carson Drive, Richmond, Kentucky

The public is invited to attend a meeting to discuss the submission of a permit to the Kentucky Department for Environmental Protection required to begin construction of the Blue Grass Chemical Agent-Destruction Pilot Plant.

This meeting is being held to explain the proposed plan to destroy the chemical weapons and to solicit public input before submitting the application for the permit.

5:30-6:00 p.m.	Open Poster Session for one-on-one questions
6:00-7:00 p.m.	Public Meeting
7:00-8:00 p.m.	Reopen Poster Session

Public participation and comments are an important part of this effort.

If you have questions, special needs, or want more information, please contact the:

Blue Grass Chemical Stockpile Outreach Office
370 Highland Park Dr., Suite 2
Richmond, KY 40475
(859) 626-8944
BGOutreach@bechtel.com

Update hearing set on weapons destruction

By Peter Mathews
CENTRAL KENTUCKY BUREAU

RICHMOND — This week, the agencies that will carry out the destruction of chemical weapons at Blue Grass Army Depot will give the public a look at what they are up to.

A public hearing Thursday is part of the process of obtaining a permit from the Kentucky Department of Environmental Protection to build and operate the plant where the weapons will be destroyed.

The two-hour session at Eastern Kentucky University will bring people up to date on the $2 billion project, explain the permitting and neutralization processes and give the public a chance to make comments, said officials at Bechtel Parsons Blue Grass.

Bechtel Parsons was selected last June to design, build and eventually close the plant where the 523 tons of nerve and blister agent will be chemically neutralized.

The facility will be built near where the

See WEAPONS, B2

IF YOU GO

Public hearing

What: A "pre-application" public meeting to discuss the process for disposing of chemical weapons at Blue Grass Army Depot.

When: 6 to 8 p.m. Thursday.

Where: Carl D. Perkins Conference Center at Eastern Kentucky University, 521 Lancaster Avenue in Richmond.

Lexington Herald-Leader
January 20, 2004
Page B1

WEAPONS

Public may air concerns

From Page B1

weapons are stored at the depot, which is southeast of Richmond.

Any valid concerns raised at the meeting can be incorporated into the permit document, which is to be submitted to the state in March, said Kevin Regan of Bechtel Parsons.

The depot is the smallest of eight chemical weapons storage sites in the continental United States. It guards about 2 percent of the original stockpile.

Under an international treaty, the United States is supposed to have its chemical weapons destroyed by April 2012.

In Richmond, construction of the neutralization plant will take about three years and is expected to begin in 2005.

There will be other opportunities for public input as the process goes forward, in addition to Thursday's meeting.

Recently, Kentucky Sens. Jim Bunning and Mitch McConnell fended off an effort within the Pentagon to shift some of the funding away from neutralization efforts at the depot and its sister site in Pueblo, Colo., said Craig Williams, executive director of the Berea-based Chemical Weapons Working Group.

The money would have been used for cost overruns and other problems at sites incinerating their stockpiles, said Williams, whose organization opposes burning the weapons.

Officials hope to speed up the destruction process in Madison County by at least a year by taking on some of the bureaucratic requirements simultaneously instead of in sequence, Williams said.

That will save money in the long run but require more spending now — and the Pentagon shift would have jeopardized that, he said.

RCRA Public Meeting-Ad Cost Schedule
Thursday, January 22, 2004.
6-8 p.m.
Eastern Kentucky University – Carl D. Perkins Conference
Kit Carson Drive
Richmond Kentucky 40475

DISPLAY ADVERTISEMENTS

Name of Publication	Publication Dates	Ad Information
The Richmond Register Richmond, Kentucky	15 Jan.	Display Ad (3x14) Classified Legal Display Ad (2x14) First ad will be full price, Second ad Pick-up Rate discounted
Richmond Advertiser (Published by Richmond Register)	14 Jan.	
Berea Citizen Berea, Kentucky	15 Jan.	Display Ad (2x18) Classified Legal Ad (2x18)
EKU Progress	15 Jan.	Display Ad (1/8)
Wallingford Richmond, Kentucky	Week of 19 Jan.	10 -(30) second ads on 5 stations WEKY-Richmond WCYO-Regional WLFX-Richmond Berea WIRB-Irvine WKXO-Berea
City of Richmond Government Access Channel	Jan. 8-22	

Public Meeting Announcement
Wednesday, January 14, 2004
Madison County Advertiser
Page 2

PUBLIC MEETING ANNOUNCEMENT

Regarding the Destruction of Chemical Weapons Stored at the Blue Grass Army Depot

Thursday, January 22
6-8 p.m.
Carl D. Perkins Conference Center
Eastern Kentucky University
Kit Carson Drive, Richmond, Kentucky

The public is invited to attend a meeting to discuss the submission of a permit to the Kentucky Department for Environmental Protection required to begin construction of the Blue Grass Chemical Agent-Destruction Pilot Plant.

This meeting is being held to explain the proposed plan to destroy the chemical weapons and to solicit public input before submitting the application for the permit.

5:30-6 p.m.	*Open Poster Session for one-on-one questions*
6-7 p.m.	*Public Meeting*
7-8 p.m.	*Reopen Poster Session*

Public participation and comments are an important part of this effort.

If you have questions, special needs, or want more information, please contact the:

Blue Grass Chemical Stockpile Outreach Office
370 Highland Park Dr., Suite 2
Richmond, KY 40475
(859) 626-8944
Outreach@bechtel.com

PUBLIC MEETING ANNOUNCEMENT

Regarding the Destruction of Chemical Weapons Stored at the Blue Grass Army Depot

Thursday, January 22
6-8 p.m.
Carl D. Perkins Conference Center
Eastern Kentucky University
Kit Carson Drive, Richmond, Kentucky

The public is invited to attend a meeting to discuss the submission of a permit to the Kentucky Department for Environmental Protection required to begin construction of the Blue Grass Chemical Agent-Destruction Pilot Plant.

This meeting is being held to explain the proposed plan to destroy the chemical weapons and to solicit public input before submitting the application for the permit.

5:30-6 p.m. Open Poster Session for one-on-one questions
6-7 p.m. Public Meeting
7-8 p.m. Reopen Poster Session

Public participation and comments are an important part of this effort.

If you have questions, special needs, or want more information, please contact the:

Blue Grass Chemical Stockpile Outreach Office
370 Highland Park Dr., Suite 2
Richmond, KY 40475
(859) 626-8944
Outreach@bechtel.com

The Richmond Register
January 15, 2004
Page A-7

PUBLIC MEETING ANNOUNCEMENT

Regarding the Destruction of Chemical Weapons Stored at the Blue Grass Army Depot

Thursday, January 22nd
6-8 p.m.
Carl D. Perkins Conference Center
Eastern Kentucky University
Kit Carson Drive, Richmond, Kentucky

The public is invited to attend a meeting to discuss the submission of a permit to the Kentucky Department for Environmental Protection required to begin construction of the Blue Grass Chemical Agent-Destruction Pilot Plant.

This meeting is being held to explain the proposed plan to destroy the chemical weapons and to solicit public input before submitting the application for the permit.

- 5:30-6 p.m. Open Poster Session for one-on-one questions
- 6-7 p.m. Public Meeting
- 7-8 p.m. Reopen Poster Session

Public participation and comments are an important part of this effort.

If you have questions, special needs, or want more information, please contact the:

Blue Grass Chemical Stockpile Outreach Office
370 Highland Park Dr., Suite 2
Richmond, KY 40475
(859) 626-8944
Outreach@bechtel.com

The Berea Citizen
January 15, 2004
Page B-2

PUBLIC MEETING ANNOUNCEMENT

Regarding the Destruction of Chemical Weapons Stored at the Blue Grass Army Depot

Thursday, January 22
6-8 p.m.
Carl D. Perkins Conference Center
Eastern Kentucky University
Kit Carson Drive, Richmond, Kentucky

The public is invited to attend a meeting to discuss the submission of a permit to the Kentucky Department for Environmental Protection required to begin construction of the Blue Grass Chemical Agent-Destruction Pilot Plant.

This meeting is being held to explain the proposed plan to destroy the chemical weapons and to solicit public input before submitting the application for the permit.

5:30-6 p.m.	Open Poster Session for one-on-one questions
6-7 p.m.	Public Meeting
7-8 p.m.	Reopen Poster Session

Public participation and comments are an important part of this effort.

If you have questions, special needs, or want more information, please contact the:
Blue Grass Chemical Stockpile Outreach Office
370 Highland Park Dr., Suite 2
Richmond, KY 40475
(859) 626-8944
Outreach@bechtel.com

The Eastern Progress
January 15, 2004
Page A-2

****
* Affidavit of Performance *
****

Radio Station TRI-CITY AM
P. O. Box 281
Irvine KY 40336

Invoice Number: 10656
Billing Type : M
Acct Exec : Todd Chaney
Commercial Length: 30
State of Kentucky)
)SS:
City of Irvine)

Bechtel-Parsons Blue Grass
301 Highland Park Drive
Richmond KY 40475

Client # 668
Bechtel-Parsons BluegrassCommercials

Order # 1

Before me, a Notary Public, personally appeared Kelly T Wallingford ,
who affirms
that he is President of Radio Station TRI-CITY AM, and that
broadcasts were made during the period: 01/01/04 - 01/31/04.

Date	Times			
Jan 15	7:36A	1:37P	5:13P	7:35P
Jan 16	8:36A	11:36A	5:34P	9:19P
Jan 19	6:23A	2:36P	5:49P	10:35P
Jan 20	9:36A	2:51P	5:36P	8:18P
Jan 21	8:19A	2:51P	4:22P	9:20P
Jan 22	7:37A	10:36A	6:37P	8:36P

Gross Invoice: $150.00 plus Sales Tax: 0.00
DUE DATE: 02/29/04 NET AMOUNT DUE: $150.00

I certify that the above units were aired within 10 minutes
of the times listed.

Signed: _____

Affirmed this 06 Day of February, 2004
In testimony whereof I have set my Hand and Seal the day and year aforesaid.
My commission expires 06/06/2004

Wanda G. Bowles
Notary Public

****
* Affidavit of Performance *
****

Radio Station WCYO-FM
P.O. Box 281
Irvine, KY 40336

Invoice Number: 10891
Billing Type : M
Acct Exec : Todd Chaney
Commercial Length: 30
State of Kentucky)
)SS:
City of Irvine)

Bechtel-Parsons Blue Grass
301 Highland Park Drive
Richmond KY 40475

Client # 539
Bechtel Parsons-BlueGrassCommercials

Order # 1

Before me, a Notary Public, personally appeared Kelly T Wallingford, who affirms that he is President of Radio Station WCYO-FM, and that broadcasts were made during the period: 01/01/04 - 01/31/04.

Date	Times			
Jan 15	6:49A	12:23P	4:32P	11:38P
Jan 16	6:37A	10:36A	4:31P	10:36P
Jan 19	6:21A	10:20A	3:54P	8:20P
Jan 20	9:51A	10:37A	4:27P	10:55P
Jan 21	9:37A	10:54A	5:43P	9:19P
Jan 22	6:50A	1:55P	4:33P	11:54P

Total: 24 at 0.00 each.
Gross Invoice: $0.00 plus Sales Tax: 0.00
DUE DATE: N/A NET AMOUNT DUE: $0.00

I certify that the above units were aired within 10 minutes of the times listed.

Signed: Kelly T Wallingford

Affirmed this 06 Day of February, 2004
In Testimony whereof I have set my Hand and Seal the day and year aforesaid.
My Commission expires 06/06/2004

Wanda G. Bowles
Notary Public

****
* Affidavit of Performance *
****

Radio Station WLFX-FM
P.O. Box 281
Irvine, KY 40336

Invoice Number: 10416
Billing Type : M
Acct Exec : Todd Chaney
Commercial Length: 30
State of Kentucky)
)SS:
City of Irvine)

Bechtel-Parsons Blue Grass
301 Highland Park Drive
Richmond KY 40475

Client # 515
Bechtel-parsons BluegrassCommercials

Order # 1

Before me, a Notary Public, personally appeared Kelly T Wallingford, who affirms that he is President of Radio Station WLFX-FM, and that broadcasts were made during the period: 01/01/04 - 01/31/04.

Date	Times			
Jan 15	8:54A	12:53P	5:53P	7:36P
Jan 16	7:43A	11:18A	5:55P	9:52P
Jan 19	7:42A	12:37P	6:43P	9:53P
Jan 20	8:43A	12:53P	4:43P	10:38P
Jan 21	7:27A	1:41P	6:42P	7:52P
Jan 22	6:43A	12:38P	5:43P	9:52P

Total: 24 at 0.00 each.
Gross Invoice: $0.00 plus Sales Tax: 0.00
DUE DATE: N/A NET AMOUNT DUE: $0.00

I certify that the above units were aired within 10 minutes of the times listed.

Signed: _____

Affirmed this 06 Day of February, 2004
In testimony whereof I have set my Hand and Seal the day and year aforesaid.
My Commission expires 06/06/2004

Wanda G. Bowles

Notary Public

Advertising Order/Production Request/Traffic Instructions
Wallingford Broadcasting Company

Client Name: Bechtel-Parsons Blue Grass
Address:
City: State: Zip:
Contact: Telephone Number:
Confirmation Needed: Yes __ No Fax Number:
Scheduling Plan: Program Name:
Schedule Start Date: 1-19-04 Schedule End Date: 1-22-04

Daypart Schedule:

	M	T	W	Th	F	S	S	Weekly Totals
6a-10a	2	2	2	2				8
10a-3p	3	3	3	2				11
3p-7p	2	2	2					6
7p-12m								
12m-6a								

Weekly/Monthly Schedule:

	M 1/19/04	T 1/20	W 1/21	Th 1/22	F	S	S	Weekly Totals
Week 1	7	7	7	4				25
Week 2								
Week 3								
Week 4								

Total Rate ____ X Quantity 25 = Total Order $ Value $150

Billing Cycle & Method: Broadcast ____ Calendar ____ Gross ____ Net ____

Copy Rotation:
Copy Title ____ % ____
Length ____ Start ____ End ____ Co-op ____
Copy Title ____ % ____
Length ____ Start ____ End ____ Co-op ____

Special Instructions:

ORDER NUMBER ____

New Order ____ Copy Change ____

Date 12-16-03
Client Code
Station Code(s) ALL 5
Product Code
Sales Rep Code Todd

Talent

COPY INFORMATION

Copy #1 Title
System# Start Date Length :30
End Date

Copy #2 Title
System# Start Date Length
End Date

#1

Schedule will air on these stations

WEKY - 1340 AM
WKXO - 1500 AM
WIRV - 1550 AM
WCYO - FM 100.7
WLFX - FM 106.7

#2

Normally this would pay for 12 spots, but due to the nature of the ad, we will match the schedule at No Charge

Location Description

Client Signature
Sales Rep Signature Todd Clay Date
Copy Approved By: Date Time

Copy

Interested in Learning about the Plan to Destroy Chemical Weapons Stored at the Blue Grass Army Depot?

Please plan to attend a public meeting being held
Thursday, January 22
6-8 p.m.
Carl D. Perkins Conference Center
Eastern Kentucky University
Kit Carson Drive, Richmond, Kentucky

Public participation and comments are encouraged.

If you have questions, special needs, or want more information, please contact the:

Blue Grass Chemical Stockpile Outreach Office
370 Highland Park Dr., Suite 2
Richmond, KY 40475
(859) 626-8944
Outreach@bechtel.com

PLANNING DOCUMENTS

Update – 1/23/04

Checklist for RCRA Public Meeting – January 22, 2004

Action	Responsible	Due Date	Notes
Reserve room	Diane	**Done**	EKU Perkins Building, Quads A&B, 12 – 9 p.m.
Meet with EKU re room arrangements	Diane/Sandra	**Done – Dec. 17**	Arrangements made for room set up, sound system, sound tech, backup projector, directional signs, security, load slides for meeting and prepare back up CD
Arrange for refreshments	Diane	**Done**	Contact Gary Collins at 622-2512
Prepare schematic of room arrangement.	Diane/Sandra	**Dec. 17 Done**	
Clean up and scan schematic	Diane	**Done**	
Prepare draft print ad	Mickey	**Done**	
Coordinate review of draft print ad	Mickey	**Done**	Input from Environmental
Update matrix of publication dates for print and broadcast ads	Diane	**Done**	See attached matrix.
Distribute print and broadcast ads to media	Diane	**Done**	Placed week of Dec. 15, 2003
Draft copy for broadcast ad	Mickey	**Done**	
Re-advertise on local radio stations.	Diane	**Done**	Will run week of Jan. 19
Place large type version of ad in window at ORO	Diane	Week of Dec. 15 **Done**	
Place public meeting announcement on local cable TV	Jill	Week of Jan. 5 **Done**	Get information on guidelines for placement. Prepare list of contact names and guidelines.
Prepare list of all posters and fact sheets for use at meeting.	Mickey	Week of Jan. 12	**Final done 1/15/04**
Prepare meeting flyer for mailing	Diane/Jill	Week of Dec. 22 **Done**	
Distribute flyer on meeting to local distribution list	Diane/Jill	Mail week of Jan. 7 **Done**	To be mailed Friday, Jan.9
Prepare and reproduce sign up sheets for event	Jill	Week of Jan. 12 **Done**	

E-mail meeting flyer to CAC, CDCAB	Mickey	Jan. 7 **Done**	
Contact local news media/invite to cover meeting	Mickey	Week of 19 **Done**	
Prepare and reproduce comment card for event	Jill	Week of Jan. 12 **Done**	Use comment cards in stock
Draft agenda for meeting	Sandra	Rev. 0/Done Review by Chris TBD **Done**	Discussed with Mickey, Tom K. Ready for review by Chris.
Draft facilitator script	Sandra	Week of Jan. 5 **Done**	**1/13/04 Chris has reviewed and commented.**
Order name tags for ORO staff	Devon	Week of Dec. 15 **Done**	Will be delivered week of Jan. 12 **Done**
Name tags for speakers/customer, etc.	Jill	Week of Jan. 12 **Done**	Use blank name tags **Done**
Purchase name tag blanks for use at meeting	Jill	Week of Jan. 12 **Done**	
Prepare Environmental posters	Parsons	Week of Jan. 12	Tom Kurkjy to follow up with Parsons **Mickey to check w/Tom**
Prepare process posters/Outreach office posters	Bechtel graphics with input from Sandra/Mickey	Week of Jan. 12	File sent to Kristen at Bechtel Graphics should receive 16 Jan. **Kristen has provided review copies to Mickey & Sandra. Comments provided 1/14/04**
Reproduce fact sheets and prepare handouts for Outreach table	Mickey/Jill	Week of Jan. 19	**Kristen has provided review copies to Mickey & Sandra. Comments provided 1/14/04. Printing of fact sheets to be handled by ORO Staff with Kentucky Printing.**
Package handouts in one set.	Sandra	CD to Kentucky Printing on January 19, 2004.	**Sandra to pick up completed posters and CD on 1/16/04.**
Briefing for CAC	Mickey/Kevin	Week of Jan. 12 6p.m. Berea **Done**	Mickey to discuss with Chris/arrange for briefing
Prepare draft slides for Tom Kurkjy	Mickey	**Done**	Sent to Tom & Chris for comment.
Prepare slides for Lt. Col. Cantwell	Mickey	**Done**	
Place all completed	Diane/Jill	Jan. 20, 2004	

meeting materials in container for transport to meeting. To include: Pens, Pencils, Comment Cards, Magnets and etc.		**Done**	
Staff registration table	Jill/Diane/ Diane C.	Jan. 22	Materials on table to include copy of slides, comment cards, sign up sheets and speaker sign up sheets
Staff Outreach tables (2)	ORO Team	Jan. 22	Check with Dave Easter and Michael Bryant
Staff to assist with welcome/refreshments, etc.	ORO Team	Jan. 22	Check with Diane Claybaugh
Make arrangements for hearing impaired	Sandra/Diane Deadline for requests 1/19/04	Week of Jan. 5 **Done**	Check with EKU **Diane has made arrangements w/EKU if we have requests.**
Prepare three notebooks for regulatory agencies and customer. Copies of all ads, handouts, flyers, etc. to document compliance	Jill	Week of Jan. 26	**Jill has begun preparing folders.**
Hold a meeting run through at Perkins Bldg.	Mickey	Jan. 22, 4:30 p.m.	Run through with microphones and audiovisuals
Transcribe meeting notes	Jill	Week of Jan. 23	Get audiotape from EKU and locate transcription services
Review meeting notes and notebooks.	Tom K.	Week of Jan. 26	
Prepare documentation package for regulators	Mickey/Jill	Week of Jan. 26	
Prepare Public Involvement Plan for meeting	Sandra	By January 9	**Sandra is working this.**
Complete housekeeping at ORO before Jan. 21 Roles and Responsibilities meeting	Jill	January 21	**Have hired a cleaning person and ORO staff is reviewing surplus materials.**
Prepare day of meeting checklist	Sandra	Jan. 9 **Done**	
Prepare list of handouts	Mickey	Jan. 9	**Done 1/15/04**
Have copies of all handouts, presentations, comment cards and	Diane/Jill	Jan. 20	2-4 slides per page Information Package

agenda			
Give status of Public Meeting at POW meeting	Mickey/Sandra/ Jill	Week of Jan. 19 **Done**	E-mail will be sent to BPBG Team since Jan. 19 is holiday.

Checklist for January 22
Day of RCRA Public Meeting

Action	Responsible	Due Date	Notes	Completed
Hold pre-meeting to verify posters are on site and that presentation materials are approved	Mickey/Tom K.	By 8 a.m.	Need to get OPSEC approval also.	**Done**
E-mail to BPBG team, Dave Easter, Dick Sloan and Michael Bryant with 2nd reminder of meeting	Jill	By 8 a.m. Jan. 22, 2004	Attach short meeting announcement and layout.	**Done**
Send e-mail to Col. Cantwell, Dave Easter, Dick Sloan, Dan Jensen, John Ursullo, Kevin Regan, April Webb, Leo Weitzman and Diane Claybaugh	Jill/Sandra	1/15/04	Attach agenda & layout	**Done**
Double check and transport handouts to meeting site	Diane/Jill	By 12 Noon		**Done**
Transport easels and posters to meeting site	Diane/Jill	By 12 Noon		**Done**
Load presentation slides on computer; prepare backup CD and/or overheads	Diane/Jill	By 12 Noon or as soon as we get it.	Check with state regarding slides for presentation.	**Done**
Verify all room and equipment arrangements with EKU, including backup projector and sound system	Diane/Jill	By 9 a.m.		**Done**
Verify EKU catering order	Diane	By 9 a.m.		**Done**
Verify names and titles of VIP	Sandra/Mickey	By 12 Noon	Notify Chris M. and Kathy	**Done**

attendees			DeWeese	
Verify names of staff to coordinate refreshments	Diane/Jill		POC is Diane Claybaugh	**Done**
Set up shared tables for Outreach Office, CSEPP, and BGAD			Double check with Dave Easter and Michael Bryant	**Done**
Verify sound tech, audio equipment and audio taping	Diane/Sandra	By 12 Noon	Sandra/Diane to follow up	**Done**
Transport registration table materials to meeting including sign in sheets, comment cards, name tags, speaker sign ups	Diane/Jill	By 12 Noon		**Done**
Set up Posters	Kathy DeWeese	Jan. 22		**Done**
Verify that EKU has completed signage and room set up	Diane/Jill	By 12 Noon		**Done**
Finalize arrangements for hearing impaired and handicap access if need has been determined in advance	Diane	By 12 Noon		**Done**
Make final media contacts/provide background material if requested	Mickey	By 9 a.m.		**Done**
Make sure photos will be taken for the record and/or newsletter	Mickey/Stephanie			**Done**
Coordinate meeting run through at Perkins Building	Sandra/Mickey	4:30 p.m.		**Done**
Pick up CD at end	Jill		Requested from	

of meeting			Paul Ramsey CD will call Sandra when it is ready	
Load and return easels, posters, etc. to Outreach Office	All BPBG attendees	After 8 p.m.		**Done**
Coordinate cleanup with EKU staff	Diane/Jill	After 8 p.m.		**Done**
Make notes on meeting follow up required	Mickey/Sandra	During meeting	**In progress 1/28/04**	
Coordinate meeting follow up	Mickey/Sandra	Week of Jan. 26	**In progress 1/28/04**	
Coordinate follow up with news media	Mickey	Week of Jan. 26	**In progress 1/28/04**	
Prepare 3 notebooks of meeting documentation	Jill	Week of Jan. 26	**In progress 1/28/04**	
Prepare meeting notes	Jill	Week of Jan. 26	**In progress 1/28/04**	
Distribute meeting notes	Jill	Week of Jan. 26	**In progress 1/28/04**	
Fed Ex meeting documentation to customer and regulators	Jill	Week of Jan. 26	**In progress 1/28/04**	

RCRA PUBLIC MEETING
JANUARY 22, 2004

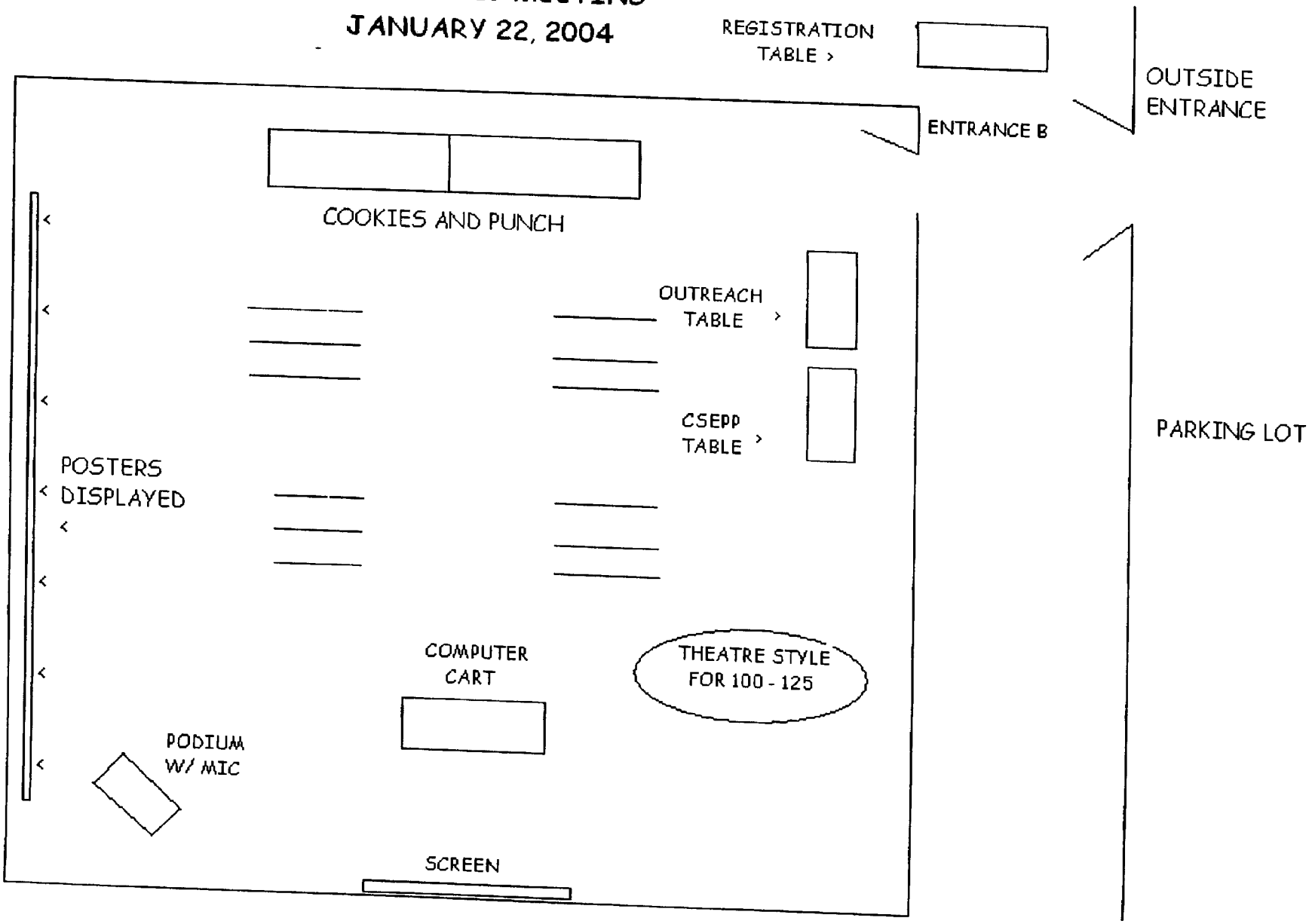

MEETING AGENDA

Agenda
RCRA Pre-Application Public Meeting
Blue Grass Chemical Agent – Destruction Pilot Plant
Thursday, January 22
Carl D. Perkins Conference Center
Eastern Kentucky University
Richmond, Kentucky

General Meeting: 6-7 p.m.

Introduction	Sandra Plant, Moderator
Opening Remarks	Chris Midgett, Project Manager
	Lt. Col. Dennis Cantwell, Commander
Blue Grass Chemical Activity	Lt. Col. Dennis Cantwell, Commander
Project Background	Tom Kurkjy, Environmental Manager
Permitting Process	Kevin Regan, Environmental Permitting Mgr
KY Dept for Environmental Protection	April Webb, Supervisor for RCRA Permitting
Questions & Answers	Sandra Plant, Moderator

Refreshments and Public Availability/Poster Session: 7-8 p.m.

Draft 1-22-04

Safety Minute for Public Meeting

Everyone who is working on the Blue Grass Chemical Agent-Destruction Pilot Project is committed to safety. And that means safety of our employees and the safety of our community.

We believe very strongly that there is NOTHING that we do, either on our jobs or in our homes that is so important that we cannot take the time to do it safely. Let me say this one more time: There is nothing that we do that is so important that we cannot take the time to do it safely.

Shortcuts can be deadly. We don't take shortcuts.

Final

Moderator's Comments
Blue Grass Chemical Agent-Destruction Pilot Plant
Pre-Application Public Meeting
January 22, 2004

Sandra W. Plant

TITLE SLIDE

- Give Emergency exit information...
- Give a safety minute...

Good evening and welcome to the Pre-Application Public Meeting. The purpose of this meeting is to discuss the submission of a permit to the Kentucky Department for Environmental Protection. As many of you know, this meeting is an important step in the process required before beginning construction of the Blue Grass Chemical Agent-Destruction Pilot Plant.

This meeting is being held to explain the proposed plan to destroy the chemical weapons and to solicit public input before submitting an application for the permit. The joint

applicants for the permit are the U.S. Army and the government's contractor for this project, Bechtel Parsons Blue Grass. Your questions and your comments are an important part of this process. We are glad you are here.

You will note that representatives of the Army and the contractor are here tonight, as well as the Kentucky Department for Environmental Protection. Each entity here is eager to provide information about the environmental permitting process, to hear your comments and to answer your questions.

Before I walk you through the agenda for this evening, let me introduce myself. My name is Sandra Plant, and I have recently moved to Richmond where I live on Oak Street. For the past 13 years, I have been employed by Bechtel National Inc., one of the partners in the contract.

My work has largely been to ensure that the public involvement requirement is met on a number of large Federal environmental projects. And that is my role tonight -- to make sure that everyone here who wishes to ask a question or make a comment is given time to be heard and your comments noted.'

On behalf of the Army and Bechtel Parsons Blue Grass, I thank you for your attendance and for participating in this evening. We hope you will stay involved in future stages of the permit application process.

SLIDE 2 - AGENDA

Let me begin by reviewing the agenda for the meeting. First you will hear opening remarks from senior representatives of the co-applicants for the permit. I will introduce Mr. Chris Midgett, who is Project Manager for Bechtel Parsons Blue Grass.

Next you will hear from Lt. Col. Dennis Cantwell, who is the Commander of the Blue Grass Chemical Activity at the Blue Grass Army Depot. Lt. Col. Cantwell will also give you background information on the Army Depot.

Mr. Tom Kurkjy, who is Environmental Manager for Bechtel Parsons Blue Grass, will follow Lt. Col. Cantwell. Tom will present project background.

Next you will hear from Mr. Kevin Regan, who is Environmental Permitting Manager on the project. Kevin will walk you through the permitting process.

The final presentation will be from Ms. April Webb, Supervisor for RCRA Permitting. She is representing the Kentucky Department for Environmental Protection. Following the presentation by Ms. Webb, I will return to the podium where I will moderate the question and comment period.

We had 1 member of the community who signed up to speak. I will call on each speaker in the order in which they signed up.]

Following their comments, I will ask for additional comments and questions from the audience. To the extent possible, the applicants will answer questions as they are asked.

For more complex questions, the applicants will provide written answers during the permit process.

Depending on the number of speakers, we may take a break during the question and comment period.

Now I will introduce Chris Midgett to give background on the project.

MIDGETT MAKES PRESENTATION, INTRODUCES CANTWELL

CANTWELL MAKES PRESENTATION, INTRODUCES KURKJY

KURKJY MAKES PRESENTATION, INTRODUCES REGAN

REGAN MAKES PRESENTATION, INTRODUCES MS. WEBB

MS. WEBB MAKES PRESENTATION AND TURNS PODIUM OVER TO SANDRA PLANT FOR COMMENT PERIOD

That concludes the presentations. We will now hear from those of you who signed up to speak **[or]** we will now take comments and questions from the audience about the design concept or the permitting process. If you have questions about issues other than the design concept or the permitting process, please hold those for later. I will call on people in the order in which they signed up at the registration table. If you didn't sign up and wish to speak, I will call on you after the others have spoken.

[I will give guidelines outlining the amount of time each will have to speak; I suggest no more than 5 minutes with a signal from me when they are at the 4-minute mark.]

Again, all relevant comments and questions received tonight will be submitted with the permit application. Questions that have a short simple answer will be addressed by the applicants as they are asked. Otherwise, all relevant questions and comments will be addressed during the permitting process.

Our first speaker is.

COMMENT PERIOD

Please feel welcome to stay for further informal discussions with the project representatives here tonight, and join us for refreshments.

A Partnership for Safe Chemical Weapons Destruction

Pre-Application Public Meeting

Resource Conservation & Recovery Act
Research, Development & Demonstration Permit

Blue Grass Chemical Agent-Destruction Pilot Plant

Perkins Building
Eastern Kentucky University
Richmond, Kentucky
January 22, 2004

BECHTEL PARSONS BLUE GRASS

ACWA

Agenda

A Partnership for Safe Chemical Weapons Destruction

- Introduction — Sandra Plant, Moderator
- Project Update — Chris Midgett, Project Manager
- Blue Grass Chemical Activity — LTC Dennis Cantwell, Commander
- Project Background — Tom Kurkjy, Environmental Mgr
- Permitting Process — Kevin Regan, Permitting Manager
- Dept for Environ Protection — April Webb, KDEP RCRA Permitting
- Questions & Answers — Sandra Plant, Moderator
- Poster Session

Tonight's Meeting

A Partnership for Safe Chemical Weapons Destruction

- Notice of intent to submit a permit application
- Inform community of proposed facility
- Solicit comments from the community
- A summary of the comments will be submitted with the Research, Development and Demonstration (RD&D) Resource Conservation and Recovery Act (RCRA) permit application

A Partnership for Safe Chemical Weapons Destruction

Bechtel Parsons Blue Grass

Chris Midgett
Project Manager
Bechtel Parsons Blue Grass Team

Project Status

A Partnership for Safe Chemical Weapons Destruction

- Staffing
  - 100 personnel working on project today
  - 15 home based in Richmond, 85 in Pasadena, CA
- Major Accomplishments
  - Design Build Plan submitted and approved on September 18, 2003, ahead of schedule. Design is 5% complete
  - Draft RD&D environmental permit application submitted on December 31, 2003, ahead of schedule
  - Integrated Master Schedule submitted and Government comments have been incorporated
  - Initial Site Plan and equipment layout for the Munitions Demilitarization Building have been drafted
  - Risk reduction testing and studies are on going in San Diego, CA; Tooele, UT; and Columbus, OH.

Project Status

A Partnership for Safe Chemical Weapons Destruction

- Upcoming Milestones
  - Submit Process Design to Government for review by January 31, 2004 (10% design)
  - Submit RD&D permit application to Commonwealth of Kentucky by March 16, 2004
  - Submit Initial Design package to Government by July 31, 2004
- Safety
  - Project has worked 70,000 hours without an injury or first aid incident
  - Project safety initiative being implemented in February 2004 to assist in Project's "Zero Accident" philosophy

Blue Grass Chemical Activity

LTC Dennis Cantwell
Commander

Mission

Safe storage and monitoring of the Chemical Weapons Stockpile until Demil is complete

Partner with community for an Emergency Preparedness Program

Comply with all International Treaty requirements

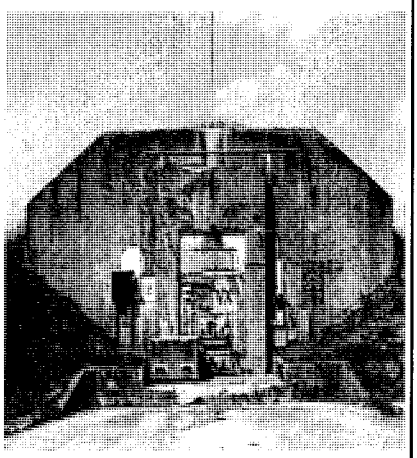

History

1944 - First Mustard (H) chemical projectiles
1962 - Nerve Agent (VX) M55 rockets arrive
1963 - Nerve Agent (GB) M55 rockets
1965 - Nerve Agent (GB) 8 in. projectiles
1966 - Nerve Agent (VX) 155mm projectiles
1995 - Blue Grass Chemical Activity Activated

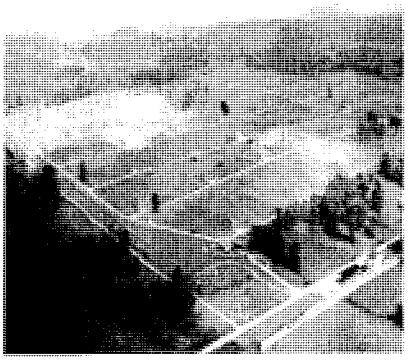

Chemical Limited Area

- 250 acres
  - 49 igloos (45 with chemical agent)
  - 523 tons of blister and nerve agents in rockets and projectiles

Chemical Munitions

- GB (Sarin) Nerve Agent
  - 8 inch projectiles, M55 rockets
- VX Nerve Agent
  - 155 mm projectiles, M55 rockets
- H Mustard Agent
  - 155 mm projectiles

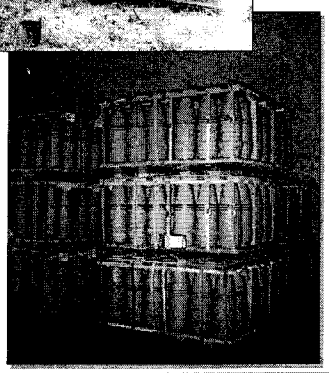

Operating Environment

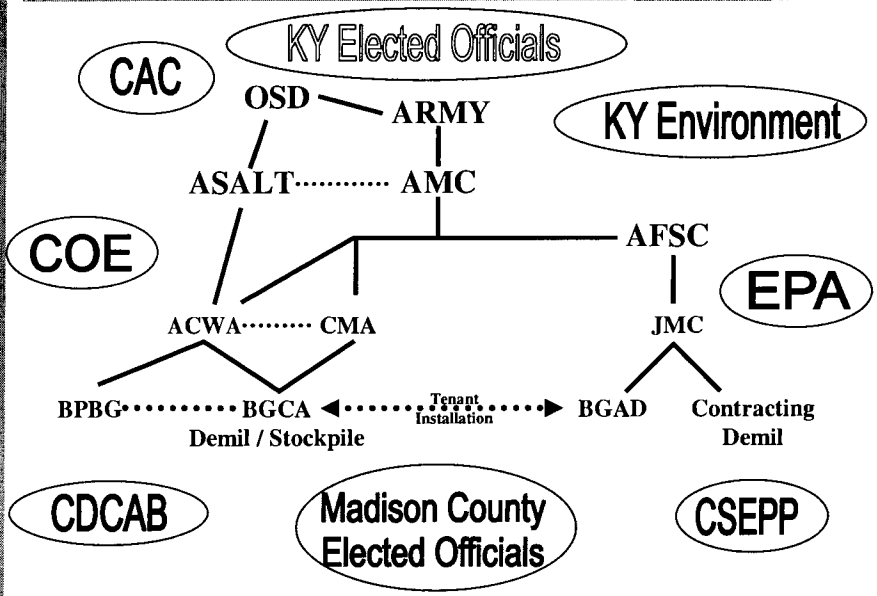

Environmental Stewardship

24/7

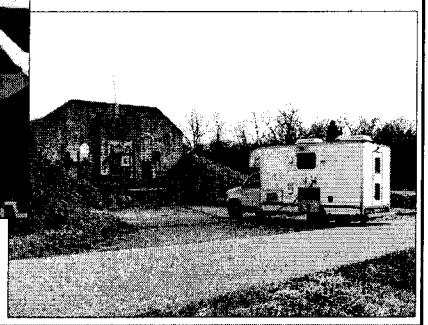

A Partnership for Safe Chemical Weapons Destruction

Bechtel Parsons Blue Grass

Tom Kurkjy
Environmental Manager
Bechtel Parsons Blue Grass Team

Background

A Partnership for Safe Chemical Weapons Destruction

- The Program Manager Assembled Chemical Weapons Alternatives (PMACWA) and its systems contractor, Bechtel Parsons Blue Grass, plan to build and operate a Resource Conservation Recovery Act Treatment, Storage, and Disposal Facility at the Blue Grass Army Depot.
- This facility will pilot test the destruction of chemical weapons containing blister and nerve agents and agent related secondary wastes.

Background (Continued)

A Partnership for Safe Chemical Weapons Destruction

- Bechtel Parsons Blue Grass, PMACWA and the Army (the "Applicants") plan to submit an application to the Kentucky Department for Environmental Protection (KDEP) for a permit required to build and operate the Blue Grass Chemical Agent -Destruction Pilot Plant.
- The application will be a Research, Development & Demonstration Permit under applicable state and federal regulations.

Chemical Weapons Sites Original Stockpile Percentages

A Partnership for Safe Chemical Weapons Destruction

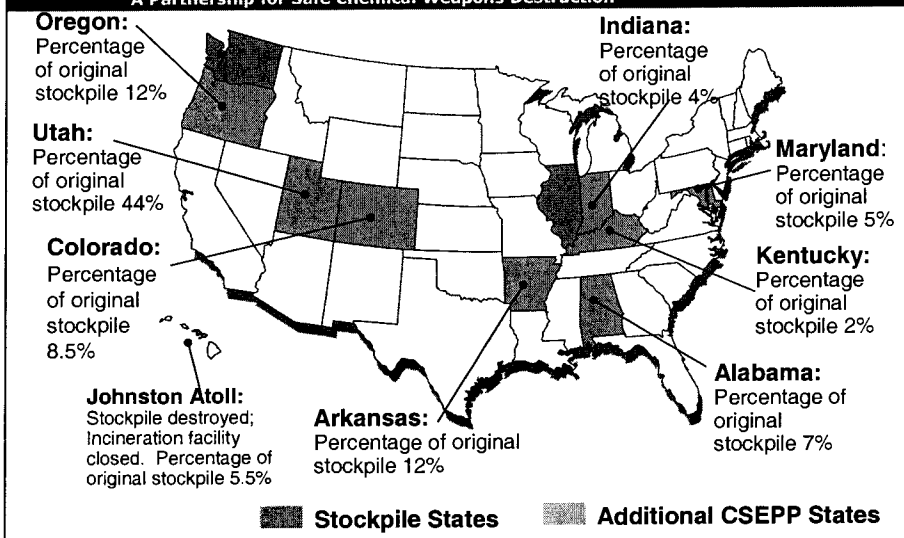

17

Chemical Weapons Sites Stages of Destruction

A Partnership for Safe Chemical Weapons Destruction

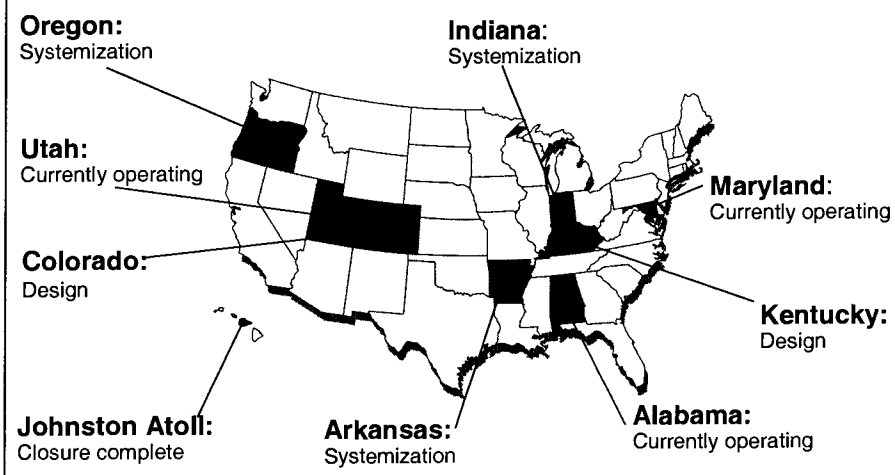

18

Why destroy chemical weapons?

A Partnership for Safe Chemical Weapons Destruction

- Weapons are old and beginning to deteriorate
- Weapons are obsolete
- Risk of continued storage increasing
- Congress mandated their destruction
- Chemical Weapons treaty mandates destruction

Chemical Weapons Destruction Timeline

A Partnership for Safe Chemical Weapons Destruction

- **November 2002**
  - Department of Defense announces neutralization followed by supercritical water oxidation as "agency-preferred alternative"
- **December 2002**
  - Final Environmental Impact Statement published
- **February 2003**
  - Under Secretary of Defense for Acquisition, Technology and Logistics approves neutralization followed by supercritical water oxidation in a decision memorandum
  - The Record of Decision completed the National Environmental Policy Act (NEPA) process for the Blue Grass Chemical Agent-Destruction Pilot Plant (BGCAPP)
- **June 2003**
  - Systems contract awarded to Bechtel Parsons Blue Grass to design, construct, test, operate and close the Blue Grass Chemical Agent-Destruction Pilot Plant
- **January 2004**
  - Permitting process begins

20

Characteristics of Mustard Agent

A Partnership for Safe Chemical Weapons Destruction

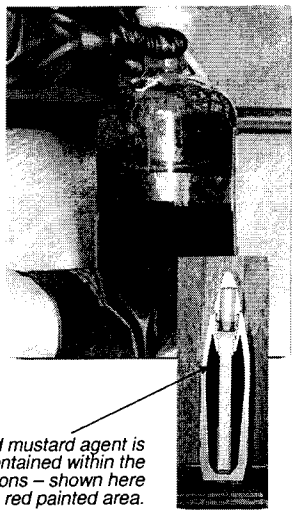

Liquid mustard agent is contained within the weapons – shown here by the red painted area.

- **Thick, heavy liquid**
- **Yellow-brown color**
- **Garlic-like odor**
- **Freezes at 56 degrees F**
- **Causes blisters**
- **Designed to injure enemy troops**

21

Characteristics of Nerve Agents

A Partnership for Safe Chemical Weapons Destruction

- Nerve Agents are members of the same chemical family as pesticides. They attack the body's nervous system:
- Sarin (GB)
  - Clear, colorless liquid
  - Evaporates at the same rate as water
  - Highly toxic in liquid and vapor form
- VX
  - Oily liquid that is odorless and colorless
  - Evaporates more than 2,000 times slower than water
  - Main hazard is through skin absorption

Neutralization followed by Supercritical Water Oxidation

A Partnership for Safe Chemical Weapons Destruction

- Explosives and propellants, also known as energetics, removed from weapons by modified reverse assembly
- Chemical agent in projectile accessed via the burster well, liquid agent washed out with high-pressure water
- Rocket shear machine punches warhead, drains chemical agent, flushes cavity and shears rocket into segments. Rocket motors, bursters and warheads go to energetics batch hydrolyzers (EBH)
- The drained chemical agent is mixed with water or a caustic solution (sodium hydroxide) to neutralize the agent and form a liquid called "hydrolysate"
- Hydrolysates are tested to ensure agent destruction before secondary treatment
- Hydrolysate fed to supercritical water oxidation units for mineralization which destroy the organic materials

23

Neutralization followed by SCWO (continued)

A Partnership for Safe Chemical Weapons Destruction

- SCWO subjects hydrolysates to high temperatures and pressures breaking them down into carbon dioxide, water and salts
- Salts dried and shipped to permitted hazardous waste disposal facilities
- Energetics treated in the same manner as the chemical agent
- Metal parts decontaminated by high pressure water washout and heat and can be recycled
- Gas effluents are filtered before release to the atmosphere. Water will be recycled into the pilot plant facility and reused as part of the destruction process.

24

BGCAPP Schedule

A Partnership for Safe Chemical Weapons Destruction

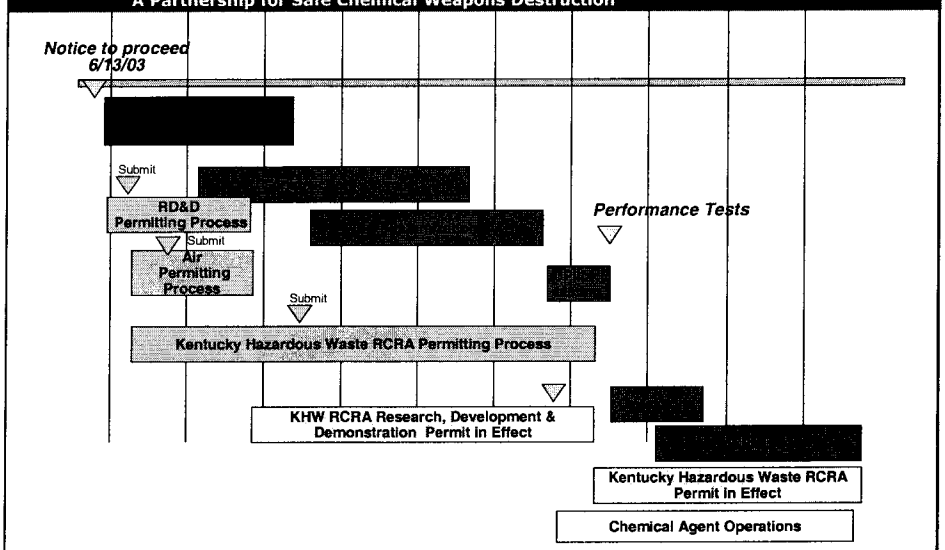

A Partnership for Safe Chemical Weapons Destruction

Bechtel Parsons Blue Grass

Kevin Regan

Environmental Permitting

Bechtel Parsons Blue Grass Team

Permitting Agencies

A Partnership for Safe Chemical Weapons Destruction

- Kentucky Department for Environmental Protection (KDEP)
  - Division for Air Quality
  - Division of Water
  - Division of Waste Management
- U.S. Environmental Protection Agency
  - Resource Conservation Recovery Act (RCRA) Programs Branch
  - Toxic Substances Control Act Branch
- Madison County
  - BGCAPP will participate in the county's integrated six week planning process

Agency Responsibilities

A Partnership for Safe Chemical Weapons Destruction

- KDEP, Division for Air Quality
  - Modify existing Blue Grass Army Depot air permit to incorporate BGCAPP
- KDEP, Division of Water
  - Issue Stormwater Permit
- KDEP, Division of Waste Management
  - ***Issue Research, Development &Demonstration (RD&D) Permit***
  - Issue Kentucky Hazardous Waste Permit
- U.S. Environmental Protection Agency
  - Provide technical input/concurrence on RD&D and Kentucky Hazardous Waste permits
  - Issue Toxic Substances Control Act permit

Division of Waste Management

A Partnership for Safe Chemical Weapons Destruction

- Review Application and Issue Research, Development and Demonstration Permit
  - RD&D Permit needed to perform research recommended by the National Research Council
  - Kentucky Hazardous Waste permit application prepared in conjunction with construction and systemization
  - Signatories will be Blue Grass Army Depot (Owner), Bechtel Parsons Blue Grass & the Program Manager for Assembled Chemical Weapons Alternatives (Co-operators)

Environmental Permitting Process for Blue Grass Chemical Agent – Destruction Pilot Plant

A Partnership for Safe Chemical Weapons Destruction

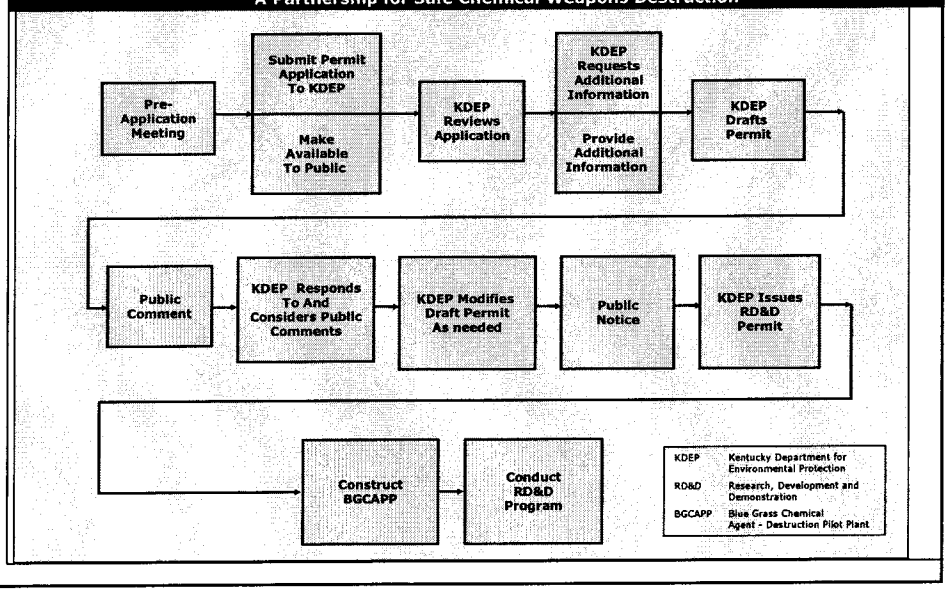

Disposal of Process Residues

A Partnership for Safe Chemical Weapons Destruction

- Metal
  - Decontaminated material to be shipped offsite
- Salts and Brines
  - Tested and shown to be free of agent
  - Disposal at permitted Hazardous Waste Facility

Conclusion

A Partnership for Safe Chemical Weapons Destruction

- The RD&D Permit is being requested to conduct RD&D to integrate the proven operations per recommendation of National Research Council.
- The application will be reviewed for safety and regulatory compliance.
- Application will be made available to public at the same time as it is submitted to KDEP:
  - Madison County Public Libraries
  - Chemical Stockpile Outreach Office
  - Other public locations to be announced
- Opportunities for public comments.

Commonwealth of Kentucky Environmental and Public Protection Cabinet

Permitting Process

Blue Grass Army Depot

RCRA Permit

Resource **C**onservation & **R**ecovery **A**ct

- Enacted by U.S. Congress in 1976 with major amendments in 1984.
- Industries must manage hazardous waste from the cradle to the grave.
- Permits are administered by the Commonwealth of Kentucky (KDEP).

Typical Process for Permits

- Applicant holds public meeting prior to submitting permit application.
- Applicant submits application to Division (DWM).
- Division announces receipt of application, and makes available for public review and comment.
- Division reviews application; use standard technical checklist.
- Division issues notice of deficiency if necessary.

Typical Process for Permits

- The Applicant addresses the concerns in the notice of deficiency.
- The Division will deny or approve the application; if approved, issue a draft permit.
- The Division holds a public hearing presenting the draft permit (or the draft major modifications) or reasons to deny a permit, and receives comments.
- The Division reviews public comments; if no cause to deny, DWM issues a final permit.

Parts of a RCRA Permit Application

Part A

- A- Identify Waste Streams, Waste Codes

Part B

- B- Facility Description
- C- Waste Analysis Plan
- D- Process Information
- E- Groundwater Monitoring

Parts of a RCRA Permit Application

Part B

- F- Procedures to Prevent Hazards
- G- Contingency Plan (not CSEPP)
- H- Personnel Training (OSHA)
- I - Closure Plan or Post-Closure Plan

Parts of a RCRA Permit Application

Part B

- J - Other Federal Laws (Endangered Species Act, Historic Sites, etc.)
- K- Waste Minimization Plan
- L- Signatures

Two RCRA Permits for BGAD

1. Non-Chemical Storage (conventional munitions)
   - Baghouse dust from de-rusting.
   - Miscellaneous solvents, washed munitions.
   - Normal industrial hazardous waste (PPE).
2. Chemical Storage (chemical agent munitions)
   - Obsolete chemical munitions: GB, H, VX
   - Agent related hazardous waste (PPE, secondary waste, etc.).

Non-Chemical Storage Permit

- Intend to issue in 2004 (early Spring)
- Will allow for public comments prior to issuing the final permit.

Chemical Storage Permit

- Projected issuance in 2004 (early Fall)
- RD&D Permit Application for demilitarization plant to be reviewed as a major modification
- Will allow for public comments prior to issuing permit and modification.

Research, Development and Demonstration (RD&D)

- Emissions are controlled.
- Operations are protective of human health.
- Risk for off-site releases are minimized.
- CSEPP is agreed upon.
- Facility is in compliance with all applicable statutes and regulations (KRS 224.50-130, KRS 224.46-520,Title 401 KAR 34:350)

Commonwealth of Kentucky Environmental and Public Protection Cabinet

Ultimate Goal:

... to protect human health and the environment.

Blue Grass Chemical Agent-Destruction Pilot Plant

Blue Grass: A Partnership for Safe Chemical Weapons Destruction

A Partnership for Safe Chemical Weapons Destruction

Information

The Blue Grass Army Depot, located near Richmond, Ky., safeguards a ready supply of conventional munitions and provides chemical defense equipment and special operations support to the U.S. Department of Defense. The Blue Grass Chemical Activity, a tenant of the 15,000-acre depot, is responsible for the safekeeping of a portion of the nation's chemical weapons stockpile. Together the Army and the community surrounding the depot are working toward a committed partnership to support the safe destruction of the Blue Grass chemical weapons stockpile.

What are the chemical weapons?

The chemical weapons stockpile is comprised of 523 tons of blister agent in projectiles and nerve agent in projectiles and rockets. Contrary to popular belief, these chemicals are not gases. In their original form, they are actually liquids. When stored for a long period of time, they can become thick and sludge-like.

What is the Blue Grass Chemical Agent-Destruction Pilot Plant?

The plant will be a state-of-the-art, full-scale pilot facility designed to safely and efficiently neutralize the Blue Grass chemical weapons stockpile. In June 2003, a systems contract was awarded to Bechtel Parsons Blue Grass to design, build, construct, test, operate and ultimately close this facility.

How will the weapons be destroyed?

After a comprehensive evaluation process, the Department of Defense selected neutralization followed by supercritical water oxidation, or SCWO, as the method of destruction on Feb. 3, 2003. During the neutralization process, munitions are disassembled using modified reverse assembly. After the agent and energetics are separated, they are chemically decomposed and neutralized by caustic or water hydrolysis. The resulting chemical compounds are known as "hydrolysates." The agent hydrolysate and the energetics hydrolysate are destroyed using SCWO units. The SCWO process subjects the hydrolysates to very high temperature and pressure, breaking them down into carbon dioxide, water, and salts. Metal parts are thermally decontaminated in a heated discharge conveyor. Dunnage, or materials such as the wooden pallets upon which the weapons are stored, are destroyed in the SCWO process. Solid effluents are recycled or tested prior to disposal in permitted landfills. Gas effluents are recycled or filtered and monitored before release to the atmosphere.

Who will destroy the weapons?

The destruction facility will be operated by the systems contractor, Bechtel Parsons Blue Grass. The Assembled Chemical Weapons Alternatives program, known as ACWA and headquartered at Aberdeen Proving Ground, Md., has been charged with

responsibility for safely disposing of the Blue Grass stockpile. Many other organizations are working in partnership with ACWA to complete this mission successfully. Among these organizations are the Chemical Materials Agency, Joint Munitions Command, Kentucky Department for Environmental Protection and Kentucky Division of Emergency Management.

How long will it take to destroy the weapons?

Bechtel Parsons Blue Grass is in the process of completing of the design. Once this phase is complete, a schedule will be developed. Subsequent phases will include construction, systemization, pilot testing, operations and ultimately, closure. The goal is to complete operations by the current Chemical Weapons Convention, or treaty, deadline, which is April 2012.

How will the environment be protected?

Protection of the unique environment surrounding the Blue Grass Army Depot is one of the Army's top considerations. Therefore, the permits for the facility will be based on special environmental studies conducted locally. Additionally, during disposal activities, the environment will be monitored continually to ensure that operations are protective of the area

What will happen to the facility and the depot once the weapons are gone?

The areas of the facility that have come in contact with chemical agent will be decontaminated and the equipment dismantled. The disposition of the remainder of the facility has not yet been determined and will be negotiated among the Commonwealth of Kentucky, ACWA and Blue Grass Army Depot.

What is the Kentucky Environmental Working Integrated Process Team?

The WIPT was chartered by the Department of Defense to expedite the planning, development and implementation of all aspects of the environmental permitting process for a chemical weapons disposal facility at the Blue Grass Army Depot. The Blue Grass WIPT meetings are held approximately every other month in Lexington or Richmond and are open to the public. Meetings are advertised in the Richmond Register, Berea Citizen and other local newspapers.

What is the Kentucky Chemical Demilitarization Citizens' Advisory Commission?

This commission, known as the CAC, is made up of nine members appointed by the governor of Kentucky. Seven are local citizens and two are representatives of state agencies that work closely with the chemical weapons disposal program. The purpose of this organization is to provide a link between the community and the Army. The members provide a local perspective to the Army so that the public is as actively involved as possible in the disposal program.

Local citizens may request to receive meeting notices and minutes by mail or email. For information on the current issues the commission is considering, to find out the upcoming meeting schedule, or to be added to the mailing list please contact the CAC secretary at 859-625-1528 or fax at 859-625-1502.

What is the Chemical Destruction Community Advisory Board?

The Chemical Destruction Community Advisory Board, or CDCAB, is comprised of representatives of the community, board members and their respective organizations who have been selected to provide advice on major policy issues regarding all aspects of the Blue Grass Chemical Agent-Destruction Pilot Plant.

Board member representatives were selected throughout a series of community forums and meetings earlier this year. The continuation of community interest and participation will be a key factor in the successful launch of this board.

In its mission statement, board members have identified the following primary activities:

- Promoting the safe, expeditious destruction of the weapons
- Ensuring the protection of the community and facility workers
- Encouraging sustainable economic development of the community
- Articulating community priorities regarding the facility
- Guiding public outreach and information sharing with the community.

How can I learn more?

The Army opened the Blue Grass Chemical Stockpile Outreach Office in 1996 as a "one-stop" source of information about the chemical disposal program. The office staff works closely with the Army public affairs team, the state regulatory offices and local and state emergency preparedness offices to ensure a comprehensive public involvement and outreach program. The office also regularly schedules speaking presentations for community groups and serves as a resource for locating Army points of contact and subject matter experts. You can reach the outreach office staff at 859-626-8944 or via email at outreach@bechtel.com. You also are invited to visit the office at 301 Highland Park Drive, in Richmond. The office is open weekdays from 8 a.m. to 5 p.m. Additional office hours are available upon request.

FOR MORE INFORMATION CONTACT: Additional information on chemical stockpile disposal is available at the Blue Grass Chemical Stockpile Outreach Office, 301 Highland Park Drive, Richmond, KY 40475. Telephone: 859-626-8944. Email address: outreach@bechtel.com. For additional information, please contact the Blue Grass Army Depot Public Affairs Officer at 859-625-6221 or the Blue Grass Chemical Activity Public Affairs Officer at 859-625-6898.

Blue Grass Chemical Agent-Destruction Pilot Plant

Resource Conservation and Recovery Act

A Partnership for Safe Chemical Weapons Destruction

Information

The Resource Conservation and Recovery Act, or RCRA, ensures the safe treatment, storage and disposal of hazardous waste generated nationwide. The Blue Grass Chemical Agent-Destruction Pilot Plant (BGCAPP) is subject to RCRA and must obtain a permit before construction of the facility can begin.

What Is A RCRA Permit?

A RCRA permit is a legally binding document that establishes the waste management activities that a facility can conduct and the conditions under which it can conduct them. The permit outlines facility design and operation, lays out safety standards, and describes activities that the facility must perform, such as monitoring and reporting. Permits typically require facilities to develop emergency plans, and train employees to handle hazards. Permits also can include facility-specific requirements such as air monitoring. The permitting agency has the authority to issue or deny permits and is responsible for monitoring the facility to ensure that it is complying with the conditions in the permit. According to RCRA and its regulations, a Treatment, Storage and Disposal Facility (TSDF) cannot operate without a permit, with a few exceptions.

RCRA, implemented by the U.S. Environmental Protection Agency (EPA) and the Kentucky Department for Environmental Protection (KDEP), regulates the management of hazardous waste from the moment it is generated until final disposition. Several aspects of RCRA affect the pilot plant, specifically the standards for generators and treatment, storage, and disposal facilities. The EPA has given KDEP the authority to implement RCRA under the Kentucky Hazardous Waste Regulations which parallel the Federal RCRA regulation.

Generators

Generators of hazardous waste must comply with standards for storage, waste tracking, labeling, recordkeeping and reporting. The pilot plant will generate hazardous waste as a residual of operations. These wastes include such things as spent charcoal filters, salts and used personal protective equipment.

Treatment, Storage, and Disposal Facilities

Facilities that wish to treat, store or dispose of hazardous waste must first obtain a RCRA permit. RCRA requires these facilities to manage hazardous waste in a manner that is fully protective of human health and the environment. Since the BGCAPP will treat and store hazardous waste, RCRA permits are required.

Permitting Process

The BGCAPP must obtain a RCRA permit to manage hazardous wastes. The process of obtaining a permit is long and complex, with oversight from both federal EPA and KDEP. Public participation is also required throughout the process.

The Program Manager for Assembled Chemical Weapons Alternatives (PMACWA) and its systems contractor Bechtel Parsons Blue Grass (BPBG) plan to build and pilot test a treatment, storage, and disposal facility at the U.S. Army Blue Grass Army Depot (BGAD), Kentucky. This facility will pilot test the destruction of chemical weapons containing blister and nerve agents. BGAD, as the owner (applicant), BPBG, and PMACWA as the co-operators (applicants) are required to submit an application to KDEP for a Research Development and Demonstration (RD&D) permit to build and operate the full-scale pilot plant. The RD&D permit will allow BGAD, BPBG, and PMACWA to build and operate the pilot plant for the purpose of evaluation. Although the plant consists of proven processes and components, the National Research Council recommended that the integrated plant should be tested under a research and development program before full operations. This will help to provide maximum safety to the worker and the public. Ultimately, the plant will be operated under a type of RCRA permit known as a "Part B".

The BGAD commander is responsible for ensuring all environmental regulations and laws are followed for all operations occurring on the depot and is a signatory to the permit. As such, all elements related to the permit, including correspondence, applications and modifications are coordinated with the BGAD Environmental Office.

To receive a RCRA permit, BGAD, PMACWA, and BPBG must submit a detailed permit application describing how the BGCAPP will be built and operated to comply with RCRA regulations. Prior to submitting the permit application, the applicants must hold a pre-application meeting to inform the public of their intent to submit an application and to obtain comments. KDEP then reviews the application, generally requests additional information and/or clarification, develops draft permit conditions, and issues a draft permit for public comment. During this comment period, there are public meetings and a public hearing. After comments are received and incorporated, a final RCRA RD&D permit is issued. With KDEP oversight, the applicants will conduct a pilot test of the proposed neutralization system. On the basis of the results, the applicants will decide whether to treat the remainder of the chemical weapons stockpile in the proposed neutralization system. Construction and operation of the plant may not begin until the Army is issued a permit.

Public Participation

Public participation is a vital component of the permitting process. Members of the public can contribute valuable information and ideas that improve the quality of both agency decisions and permit applications. The public is encouraged to ask questions and provide input throughout the entire life cycle of the permitting process.

For More Information Contact: Additional information on chemical stockpile disposal is available at the Blue Grass Chemical Stockpile Outreach Office, 301 Highland Park Drive, Richmond, KY 40475. Telephone: 859-626-8944. Email address: outreach@bechtel.com. For additional information, please contact the Blue Grass Army Depot Public Affairs Officer at 859-625-6221 or the Blue Grass Chemical Activity Public Affairs Officer at 859-625-6898.

Answering questions

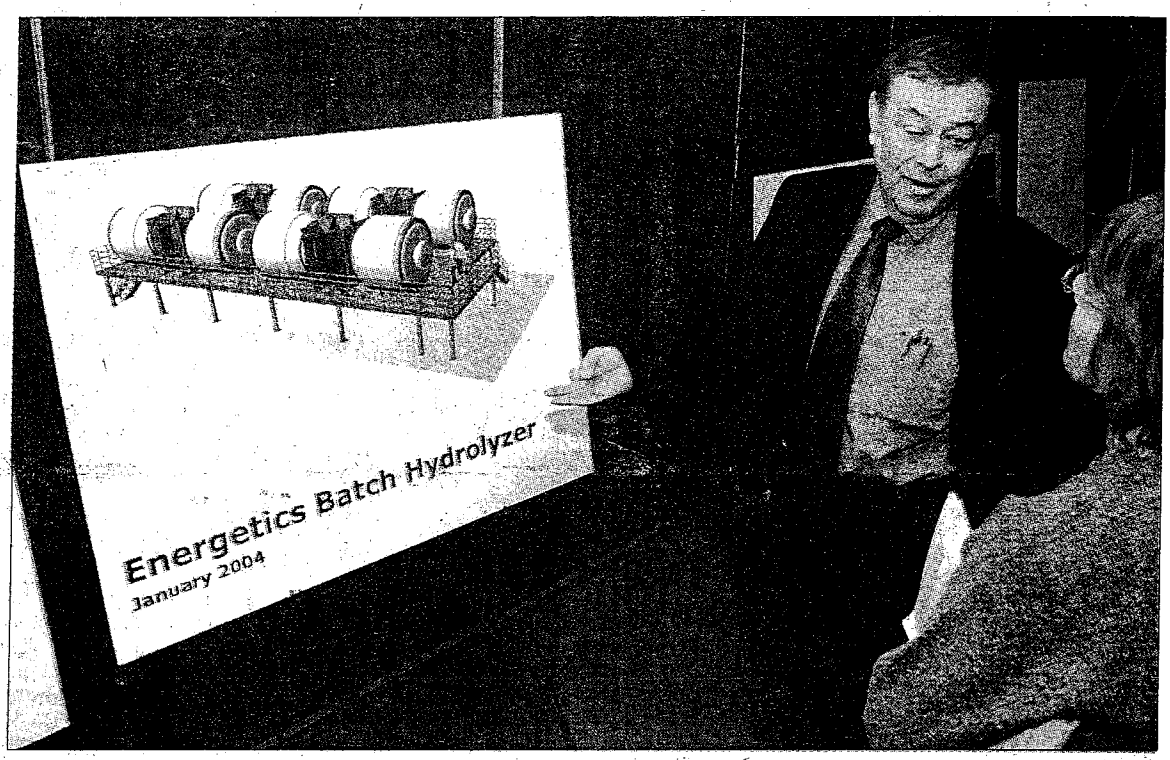

NANCY TAGGART/THE REGISTER

Leo Weitzman, who works in environmental management at Bechtel Parsons Blue Grass, explains chemical neutralization to Karen Mattingly of Berea after a public meeting Thursday night concerning the disposal of chemical weapons at the Blue Grass Army Depot.

Officials host public meeting to answer community's questions

Dozens of Madison County residents attended a public meeting Thursday hosted by Bechtel Parsons Blue Grass, the Program Manager for Assembled Chemical Weapons Alternatives, and the Blue Grass Army Depot to hear details on how the 523 tons of chemical weapons stored at the depot will be demilitarized. The meeting was part of the permitting process, allowing residents to voice their concerns before a final permit is issued.

NANCY TAGGART/THE REGISTER

A large crowd gathered in the Perkins Building at Eastern Kentucky University Thursday night for a pre-application public meeting.

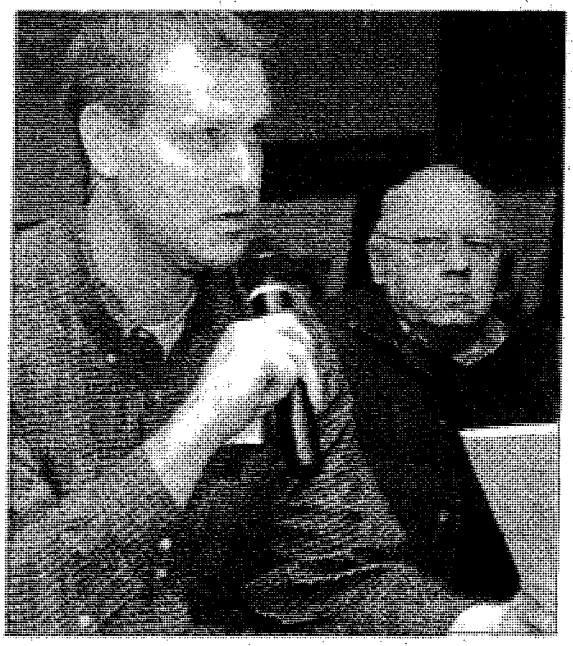

NANCY TAGGART/THE REGISTER

Ed Bergstrom, a student at the University of Kentucky, asks members of Bechtel Parsons Blue Grass about the chemical weapon disposal process after their presentation at a public meeting at Eastern Kentucky University Thursday night.

Richmond Register
Jan. 23, 2004
Page 1

MEETING NOTES

Resource Conservation and Recovery Act
Pre-Application Public Meeting
January 22, 2004
Carl D. Perkins Building
Eastern Kentucky University
Richmond, Kentucky

Ms. Sandra Plant, Bechtel Parsons Blue Grass, Moderator, called the meeting to order at 6:05 p.m. Ms. Plant gave instruction on emergency exit and a short safety briefing. She recognized Paul Ramsey, Eastern Kentucky University Media Resource Department, the audio equipment operator. Ms. Plant explained that the purpose of the meeting was to solicit public input on the Resource Conservation and Recovery Act (RCRA) Research, Development and Demonstration (RD&D) permit application to destroy the chemical weapons stored at the Blue Grass Army Depot. Ms. Plant also went through the agenda so that stakeholders would know what to expect from the meeting.

Mr. Chris Midgett, Project Manager, BPBG, gave a brief overview of the current status of the Blue Grass Chemical Agent-Destruction Pilot Plant (BGCAPP). Mr. Midgett covered the milestones, which include the design build plan, the integrated master schedule, completion of 5 percent of the initial design, and risk reduction studies. BPBG has completed more than 70,000 hours without a recordable injury or workday case. Staffing at this time is 100 people, 15 in the Richmond office and the rest in the Pasadena, California office. An Initial Process Design Package (10% design completion) will be submitted to the Army by January 31, 2004. The Initial Design (30% design completion) is scheduled for submission to the Army by July 31, 2004.

LTC Dennis Cantwell, Commander, Blue Grass Chemical Activity (BGCA), provided a brief history of Blue Grass Chemical Activity and reminded all in attendance of the meeting's purpose. The Blue Grass Army Depot has 2 percent of the nation's original chemical weapons stockpile. The Chemical Weapons Convention treaty mandates that the weapons be destroyed. LTC Cantwell commented that the BGCA is operating 24 hours a day, seven days a week, 365 days a year.

The employees are committed to environmental stewardship, and the safe and secure storage of the stockpile.

Mr. Tom Kurkjy, BPBG Environmental Manager, provided background information on the proposed facility. Mr. Kurkjy spoke about the permit application, which will be submitted to the Kentucky Department for Environmental Protection (KDEP) to build and operate the pilot plant.

Mr. Kevin Regan, BPBG Environmental Permitting Manager, briefed the public on the procedures required by the applicants to obtain environmental permits from KDEP. Mr. Regan also spoke about the KDEP, Division for Air Quality, Division of Water, Division of Waste Management and U.S. Environmental Protection Agency responsibilities with regards to chemical weapons stockpile. He presented background information on the steps required to receive a permit to conduct a RD&D program.

Ms. April Webb, Supervisor for RCRA Permitting, KDEP, Commonwealth of Kentucky Environmental and Public Protection Cabinet, provided an overview on the permitting process from the state's perspective. U.S. Congress enacted RCRA in 1976 with major amendments in 1984. Ms. Webb also said that KDEP could issue permit in early Spring 2004 for non-chemical storage. KDEP will allow for public comments prior to issuance of the permit. The projected issuance for the chemical storage permit will be in early Fall 2004. The ultimate goal of KDEP is to protect human health and the environment.

Following the five presentations, the moderator called on the one speaker who had signed up to make a five-minute statement. Mr. William Scrivner spoke on the topic of emergency preparedness and the Chemical Stockpile Emergency Preparedness Program (CSEPP). A copy of his statement can be found in Annex A of this document. After the presentation, the public had the opportunity to ask questions of the five presenters. The questions were:

- (Q.) Mr. Craig Williams, Director of the Chemical Weapons Working Group and member of the Chemical Destruction Community Advisory Board (CDCAB): On page 12 of the

handout, there was some overlapping of the RD&D permitting Process and Construction. Please explain.

- (A) Mr. Midgett, Project Manager gave the explanation that access roads would need to be built prior to construction of the Disposal facility on BGAD. Construction of this road and associated entry facility, do not require an RD&D permit prior to the start of construction.

- (Q.) Ms. Jessica Richardson, Berea College student, asked if there were any efforts to extend information to Berea College?

- (A) Mr. Midgett said he had met with the President of Berea College. He noted that the Outreach effort extends beyond Madison County and includes a seven county area.

- (Q.) Ms. Stephanie McSpirit, asked how the Permitting Process, Contingency Plan and Emergency Response were in regards to the community.

- (A) Mr. Regan, stated that before any operations involving live agent can occur, the plant operators would be required to have a contingency plan in place. This plan has to be approved by the installation and the state. The county and the state are responsible for responding to an event that effects residents outside the installation and the Army would be responsible for responding to an incident or accident on the installation. Ms. Plant requested that Ms. McSpirit state her question in writing so that the government could provide a response in writing. LTC Cantwell added that chemical accident emergency exercises are held on a regular basis.

- (Q.) Mr. Mike Cannon, What is the plan for the facility after chemicals are disposed of?

- (A.) Mr. Midgett responded that the contract states that BPBG and the Army are required by public law to close the facility, and return the area back to original state. BGAD, after

negotiations with the state and the public, may choose to keep some of the facilities associated with the project.

- (Q.) Mr. Greg Burnett, EKU student, had several questions. He was asked to write them down and submit them to the outreach staff. Mr. Burnett submitted questions and his answers are in the process of being responded to.

- (Q.) Mr. Williams requested from the Madison County Emergency Management Agency (EMA) the date, time and location of the CSEPP public hearing. He asked that two separate issues be put on agenda, 1. Off-site response, 2. On-site response.

- (A.) Mr. Carl Richards, Madison County EMA informed the public that the meeting will beheld in Posey Auditorium on Eastern Kentucky University's campus, February 5 from 6-8 p.m.

- (Q.) Sandra (last name not given), of the Kentucky Job Center, asked when jobs at the facility were going to be available. She said she receives inquiries on jobs on a daily basis.

- (A.) Mr. Midgett answered that jobs would be available before the start of construction. Hiring should take place around mid-summer 2005.

- (Q.) Mr. Ed Bergstrom, University of Kentucky student, had several questions about the project.

- (A.) He was asked to submit in writing and will forward to appropriate person.

The formal meeting ended at approximately 8 p.m. and attendees were invited to have refreshments and to continue to review posters and talk with project personnel.

WRITTEN PUBLIC COMMENTS

20 JANUARY 2004

PO BOX 5108, RICHMOND KY 40475

A PETITION

FROM THE CITIZENS AND WORKERS OF MADISON COUNTY

SEEKING REDRESS OF SAFETY GRIEVANCES RELATING TO CSEPP AND

CHEMICAL DISASTER EMERGENCY AND

RELATING TO THE PERMITTING PROCESS

A PETITION BY CONCERNED CITIZENS AND WORKERS FOR CSEPP COMPLIANCE AND MAXIMUM CHEMICAL DISASTER EMERGENCY RESPONSE PROTECTION FOR MADISON COUNTY KENTUCKY, A TOXIC CHEMICAL WEAPONS STORAGE SITE

PO Box 5108
Richmond Ky 40475
January 20 2004

TO:

Public Meeting on Permitting, 22 January 2004 Moderator

Kentucky Department Environmental Protection
Kentucky Division Emergency Management
Governor Fletcher

Sen.Mitch McConnell
Sen. Jim Bunning
Rep Hal Rogers
Mr. Ben Chandler
Mrs. Forgy Kerr

Judge Kent Clark

DoA Under Secretary CSAPP
DoA Under Secretary Safety

FEMA

OSHA

EPA

A list of questions were submitted publically to a CSEPP forum reluctantly attended by DoA and FEMA officials in January 2000. That was the first and last time that any CSEPP officials ever presented themselves to Madison County public. However, public information as specified by law was not forth coming as both the DoA and FEMA ignored the citizens concerns and issues.

Again we submit our issues, grievances, and fears to federal agencies and officials for redress and correction. This is timely as the rush to obtain a Kentucky permit has speeded up, but the related safety factors continue to lag.

As public information and citizens input has been deliberately made nonexistent here, we do not expect a reply this time either. Hopefully some of the influential copy furnished groups will help us obtain answers.

It is a relatively easy matter to create credibility, just be proactive not cavalier; provide public information; seek citizen and worker input; establish oversight councils for stakeholders; schedule and conduct regular CSEPP and chemical site safety meetings by DoA, FEMA, state and local officials for the public and workers.

Essentially. all that we have continually asked for is our due. good offices

Without maximum protection, public information, or citizens input, all that we can depend on is the discretion of the Kentucky state division that will issue the permit after approval of CSEPP as set forth in KRS 224.50-130. Unfortunately they do not direct compliance, only approval of the final product before issuing a permit; sowe may be without adequate protection for yet many more years-an unconscionable situation.

If, responsible governments and their agencies, and representatives will not redress safety deficiencies the alternative is thru the courts.

Addendum:

We see no difference between RD&D permit and a regular production permit from a CSEPP application.

Please comment.

Citizens and chemical storage site workers concerns and questions concerning the readiness to deal with a chemical Disaster emergency (CDE) response.

Does the Army have a contract with all of Madison County that public safety is number 1 regardless?

Is our community entitled to maximum protection (MP) from a chemical disaster emergency (CDE) under federal law? What is MP and why have we never heard it defined?

Does the chemical storage emergency preparedness plan (CSEPP) entail citizen input and public information?

Are the nearly 1,000 chemical storage site workers protected from CDE by OSHA, CSEPP and Kentucky statues?

Of the aspects CSEPP, DEMIL, Permitting, ACWA, don't you think that CDE plan is the most important?

The answers are obviously "yes", so why have none of these vital safety protective measures not been fully implemented here?

Why is the permit in process when the agencies responsible for maximum protection are all cognizant of the deficiencies?

When will maximum protection measures be completed here?

Why has it gone unattended these many years by DoA and FEMA?

Is there a quid pro quo whereby max protection measures will be held up until a Kentucky DEMIL permit is issued?

Compare the more extensive protection available at Anniston and Umatilla where state permits are in effect, with regards to number of schools, universities, and hospitals over-pressurized (OP) and hoods issued to here in Madison County?

Does the technical literature make reference to the danger for a CDE while the TCW are being stored as greater than for a DEMIL operation?

If so, why then is MP not yet available here?

Do you plan to pursue a permit for a pilot plant even though long over due maximum protection is yet to be in place for citizens and workers?

Don't you think that the permit process should be halted until you bring MP to its entitlements?

Since you have failed to issue protective hoods neither to citizens in the chemical disaster danger zones nor to workers near ground zero, can you provide us with the source of the hoods so that we may purchase them for our families and for ourselves at the chemical storage work site?

The only CDE plan for site workers, vague as it is, relies upon evacuation. Does the DoA now advocate SIP? Does this disparity not pose unnecessary risks?

Were you aware that EOC manager of BGAD stated publicly that no finds are available for training of BGAD workers or for disaster exercises?

Why does not the CSI do a real evaluation of the chemical stockpile here and include a review of the site chemical disaster emergency plan?

Does CSEPP have even a minimal quality assurance (QA) plan as is certainly needed? Is QA in place to monitor the status of the alert radios, provide basic instructions for shelter-in-place especially for those requiring special assistance such as the elderly and handicapped?

Five to ten years ago the county EOC relied solely upon a ridiculous 7- ½ hour evacuation plan
Why did not CSEPP evaluate and make SIP and OP available?
Why did not CSEPP fund roads to facilitate evacuation?
Why was the citizenry not informed of such a glaring defect?

CSEPP IPT meets regularly and its discussions would alarm most of us. Why not make the present and past meeting minuets public as should be done? Why not meet during non-working hours so citizens can attend and ask questions?

Under the freedom of information we request this IPT information as well as information on the other issues brought forth above.

A child born here today will probably graduate from high school before the chemicals are destroyed.
Were you aware that the citizens of Madison County never got to vote by referendum on how to deal with TCW destruction.? They did not get to choose between shipping the chemicals to an incineration already established, neutralization especially after 9-11, DEMIL as soon as possible using the best available technology, or wait an indefinite time for the perfect methodology.

We will submit more questions from time to time.

Copies Furnished:

IAM & AW 859
Harold Green

Rep Moberly
Sn. Whorley
Sn. Napier
Mr.Metcalf

Madison County Magistrates

Madison County Board

Richmond Mayor
Richmond City Council
Richmond City Council

Berea Mayor
Berea City Council

EKU president

Lexington Mayor

Irvine Mayor
Estill County Judge

Lexington Herald
Louisville Courier Journal
Richmond Register
Berea Citizen
Citizens Voice & Times (Irvine)

US News & World Report
Time
Sixty Minutes
USA Today
Fox
Anniston Star

Channel 27
Channel 36

Channel 18
Channel 56

CAC

Others as identified

We, the stakeholders listed below, want the maximum protection from chemical disaster emergencies that workers and citizens in Madison County deserve and have been entitled to receive under law to finally be completed. We expect that citizens and workers input, public information, and oversight councils will also be organized as part of the maximum protection entitlement.

The alternative is for us to seek relieve of these grievances and safety omissions in federal court and obtain a halt to the entire proceedings.

Gary W Albrecht

Walter R Kisilas

Dan Chris

Toni L. Thompson

We, the stakeholders listed below, want the maximum protection from chemical disaster emergencies that workers and citizens in Madison County deserve and have been entitled to receive under law to finally be completed. We expect that citizens and workers input, public information, and oversight councils will also be organized as part of the maximum protection entitlement.

The alternative is for us to seek relieve of these grievances and safety omissions in federal court and obtain a halt to the entire proceedings.

Norman L. Hall

Barkley W. Gibson

William R. Scrivner

We, the stakeholders listed below, want the maximum protection from chemical disaster emergencies that workers and citizens in Madison County deserve and have been entitled to receive under law to finally be completed. We expect that citizens and workers input, public information, and oversight councils will also be organized as part of the maximum protection entitlement.

The alternative is for us to seek relieve of these grievances and safety omissions in federal court and obtain a halt to the entire proceedings.

William R. SCRIVNER William R. Scrivner

SAMUEL D Merrick Samuel D Merrick

HENRY TURPIN Henry M. Turpin

Chester WOODS Chester Woods

Henry Leach

Johnny Brooks

Mark Cates

Harold Tipton Harold Tipton

HENRY MARSHALL Henry Marshall

Bill MAYFIELD Bill Mayfield

Ronnie Anderson

Jerry Bowling

Roxana G. Hall Roxana G. Hall

CITIZENS CSEPP QUESTIONS & COMMENTS
Request Written Response to the CAC and Public

>What are our maximum protection entitlements for a chemical weapons storage site and where can we read this?

hat is a reasonable time for maximum protection completion, it has been +10 years now, we think it is seriously overdue?

>What agencies have the various responsibilities? Is the ultimate responsibility DOA \ DOD?

>Explain the several memorandums of understanding and why they are not completed?

>Why has detailed public information been with held? Is it not required by law?

>When was the request for Madison collective protection budget received by FEMA \ DOA?

>Why did not DOA \ FEMA force improvements and guidance from a 7-hour evacuation for chemical disaster emergency response. It is incredulous to expect a rural county to develop and implement CSEPP?

> We expect a search and rescue as part of response, how will it work?
>Discuss the past inaction and our state's request for assistance, Ky. letter to D. Fisher, May 22, 1998

>Gridlock has been publicly attested to as a long-standing critical CSEPP obstacle, we expected you to offer plans and a platform to lead CSEPP. What will you do now?

>When will EKU receive over-pressurization protection?

.ıy has Umatilla advanced so much further in their CSEPP?
>They have 11 schools over-pressurized, compare & contrast Madison County to their program

>Are the exercises evaluated on both ends of CSEPP - BGAD and Madison County EOC
>What are results?
>Why is it not published?

>Collective protection has been practiced for years in private sector such as LEPC exemplified by Unocal video.
Why has it been delayed here. At least selected private homes could have received a $2 video as they did expensive radios
>Why not work with Red Cross or other volunteer groups such as the scouts, PTA, etc to educate home shelter in place, one group the CCCC volunteered?

>>Much of the above deficiencies could have been avoided with public participation, education and information

>>The government could have used CSEPP as a vehicle for community cooperation had it been managed properly.

>>Many people feel that CSEPP is more important than DEMIL or Treaty.

Jan 05 2001

CAC CSEPP COMMITTEE PAPER NUMBER ONE

JANUARY 05 2000

To: CAC and the Public

The following is a list of our expectations for the January CSEPP forum and we would like them to address their response in writing for the public record:

1. Publicize the federal CSEPP DOA \ FEMA chain of authority and responsibility by the individual, office, address, and numbers for their phone, fax, and email to insure public participation and a response to the stakeholders concerns, fears, and questions.

2. Establish a public information center at the Madison County library that will encompass *all* issues and areas that concern or effect public safety vis-a-vis toxic chemical weapon storage at this site in our community. This committee can oversee it with permission from the library

3. Arrange for unlimited access to information that will enable filing and distribution for *all* CSEPP and chemical related activities. Such information will include but not be restricted to reports, evaluations, meeting minutes (IPT, SURETY), exercises (CSEPP), inspections (CSI), recommendations, memorandums of understanding, and policy papers.

4. Set up a procedure so that the public is regularly informed as to the status, problems, gridlock, and completion of *every* phase of the CSEPP process, including past elements. Allow for periodic forums through the CAC.

5. Issue a complete financial statement for CSEPP expenditures that breaks down expenses for completed, on going, and planned costs at each level and site.

6. Committee members will all have a place at the table.

7. Field public questions.

CSEPP Committee

Good evening and welcome to tonight's forum on Chemical Stockpile Emergency Preparedness Program (CSEPP). All communities that host toxic chemical ›ons storage sites are guaranteed Maximum Protection for their citizens by ſeeral law. Unfortunately we have to fight for ours.

The Concerned Citizens for CSEPP Compliance, known as CCCC has generated this gathering.

Our goal here tonight is to inform and thus bring about public participation to resolve public safety issues and problems with our Chemical Disaster Emergency Response that are of 10 years standing.

The main safety issues and concerns are listed below but are not limited to:

1. Chemical Disaster Emergency Response has relied solely upon vehicular evacuations using our roads and highways that are impossible to provide a speedy retreat to safety.

2 Collective protection has not been implemented to protect our children while t are at their school. Umatilla Oregon has had 11 schools constructed for Over-Pressurization for some time. EKU and Pattie A. Clay are in this category also.

3. Homes of our elderly, ill, and mothers with children have not been provided basic safety assistance of Shelter-In Place that is commonplace in other communities.

4. Public information and participation has not been delivered as required by the responsible agencies. The overwhelming majority of Madison County citizens know nothing of these issues.

5. There has not been leadership from the high level of federal government to solve problems, insure the implementation of best safety measures, and overcome gridlock among the agencies, even though that is where the ultimate responsibility lies.

C ›munity awareness and involvement is the only way to insure our over due e..dement to maximum public safety.

I support this petition by the Concerned Citizen's for ***CSEPP*** (Chemical Stockpile Emergency Preparedness Program) Compliance in securing a Maximum Protection Chemical Disaster Emergency Response for Madison County Kentucky.

CSEPP is Public Law *entitlement* for all Army toxic chemical weapons storage sites. The Department of the Army has a contract with our community: **Public Safety is Number One, Unconditionally.** Yet after a decade, they have produced a woefully inadequate plan for *chemical disaster emergency response*--- a 7-hour evacuation by vehicle on Richmond and Madison County's crowded roads; not Over-Pressurization for our children's schools or Home Shelter-In Place for our house bound citizens as has been implemented at Umatilla Oregon years ago by DOA \ FEMA.

They have *failed* miserably in their basic mission to inform and educate our populace concerning CSEPP, particularly on their 7-hour incident. The citizens of Madison need help: I ask you, our senators, congressman, governor, state agencies, county judge and officials, to honor this petition and act to intercede with DOA \ FEMA to start and complete action on the level of maximum protection that they are responsible to provide this community.

The top CSEPP DOA \ FEMA authorities *owe* us a public meeting to address our concerns. We want them to explain their CSEPP deficiencies and responsibilities, and define our CSEPP entitlements.

These CSEPP issues are especially *time critical* for our safety as a special interest group is secretly working to revise Kentucky Law KRS-224 this legislative session. If allowed to pass, this revision will allow Kentucky Environmental Protection Cabinet to accept the DOA's application for a permit to store and destroy the chemicals, <u>without</u> our vital present guarantee of CSEPP demonstration. They and their KRS224 Revision will effectively kill the long overdue chemical disaster emergency response for Madison and surrounding Counties because the DOA will no longer have to comply with Kentucky law. We need to preserve our protective laws and to expand the maxim protection.

NAME \ DATE	ADDRESS	PHONE
Flossie Stiles November 2, 1999	Flossie Stiles 435 Concord Rd. Richmond, Ky. 40475	606-623-4385

I support this petition by the Concerned Citizen's for ***CSEPP*** (Chemical Stockpile Emergency Preparedness Program) Compliance in securing a Maximum Protection Chemical Disaster Emergency Response for Madison County Kentucky.

CSEPP is Public Law *entitlement* for all Army toxic chemical weapons storage sites. The Department of the Army has a contract with our community: **Public Safety is Number One, Unconditionally.** Yet after a decade, they have produced a woefully inadequate plan for *chemical disaster emergency response*--- a 7-hour evacuation by vehicle on Richmond and Madison County's crowded roads; not Over-Pressurization for our children's schools or Home Shelter-In Place for our house bound citizens as has been implemented at Umatilla Oregon years ago by DOA \ FEMA.

They have *failed* miserably in their basic mission to inform and educate our populace concerning CSEPP, particularly on their 7-hour incident. The citizens of Madison need help: I ask you, our senators, congressman, governor, state agencies, county judge and officials, to honor this petition and act to intercede with DOA \ FEMA to start and complete action on the level of maximum protection that they are responsible to provide this community.

The top CSEPP DOA \ FEMA authorities *owe* us a public meeting to address our concerns. We want them to explain their CSEPP deficiencies and responsibilities, and define our CSEPP entitlements.

These CSEPP issues are especially *time critical* for our safety as a special interest group is secretly working to revise Kentucky Law KRS-224 this legislative session. If allowed to pass, this revision will allow Kentucky Environmental Protection Cabinet to accept the DOA's application for a permit to store and destroy the chemicals, <u>without</u> our vital present guarantee of CSEPP demonstration. They and their KRS224 Revision will effectively kill the long overdue chemical disaster emergency response for Madison and surrounding Counties because the DOA will no longer have to comply with Kentucky law. We need to preserve our protective laws and to expand the maxim protection.

NAME \ DATE	ADDRESS	PHONE
Brian Whicker	349 Woodland Ave,	623-8644
Mary Whicker	349 Woodland	623-8644
Elmer James	150 NORTHLAND DR	252-1425
Jeanie Whitlock	101 Holly Hill	985-0868
Melissa Pierce	320 Preston Ave.	266-4123
Michael Pierce	320 preston Ave	266-4123
Richard Zerbee	210 S. 3rd St. Apt 12	
Rose M. Bailey	#3 BARON AVENUE	253-9457
Jason Palmer	102 Manna Dr.	626-3905
Gary Garth		
Wassie Bailey	Huntsville Dr.	

25 September, 1999

I support the petition by the Concerned Citizen's for CSEPP (Chemical Stockpile Emergency Preparedness Program) Compliance in securing Maximum Protection Chemical Disaster Emergency Response. CSEPP is public law entitlement for all Army toxic chemical weapons storage sites. The DOA has a contract with our community: Public Safety is Number One, Unconditionally. Yet after a decade, they have produced only a ven-hour evacuation by vehicle, not Over-Pressurization of schools or Home Shelter-In-Place as has been plemented at Umatilla, Oregon years ago by DOA \ FEMA. The citizens of Madison County need help; I ask you Senator McConnell to do the same for our emergency public safety as you have accomplished for the Assembled Chemical Weapons Assessment (ACWA) Program and jump start those agencies and officials responsible for CSEPP into action.

PETITIONER'S NAME	MADISON COUNTY KY ADDRESS	HOME PHONE NUMBER
Carol Bertin	6988 Freeman	527-3522
Kerana Hall	112 Winston Dr.	623-4103
Michele Bing	100 Wanda Dr.	624-3998
Gwendolyn Camp	204 Goodloe Chapel Road	(606) 369-5749
Lillyane Hall	12 W. Cook and	624-9562
Jennifer Mockbee	117 Israel Dr.	623-5141
Anne Dean	705 North Powell Ave.	986-8649
Sallie Cobb	109 W. Berrington Ln.	623-7082
Ann Mulliken	1045 Elizabeth	623-1954
Kim Cates	1041 Brandy Ln. #8	626-5195
Diane Joyner	146 Lakeshore Dr.	623-8492
Pamela Dexter	1041 Brandy Lane #3	625-5970
Elizabeth Horn	1530 McKee Rd Berea	986-8540
Patty Curry	105 Southland Dr	623-8455
Bobbie Taylor	256 Fike Rd. Waco Richmond	
Lynnie Clark	311 Moberly Ave. Richmond	623-8326
Debra Brown	113 Redland Dr	624-2333
L G Goodwin		
Teresa Brown	Elm Manor Apt #1 Berea	
Becky Moberly	225 Beechwood Dr.	986-5698
Amy Reynolds	33 Herons Landing	369-3225
Amy Parsons	507 Martin Dr.	623-4112
Regina Clark	324 Gum St. Apt B Lexington	225-0036
[illegible]	[illegible]	[illegible]
Traven Hall	130 Beaver Dr	623-7476

I support this petition by the Concerned Citizen's for ***CSEPP*** (Chemical Stockpile Emergency Preparedness Program) Compliance in securing a Maximum Protection Chemical Disaster Emergency Response for Madison County Kentucky.

CSEPP is Public Law *entitlement* for all Army toxic chemical weapons storage sites. The Department of the Army has a contract with our community: **Public Safety is Number One, Unconditionally.** Yet after a decade, they have produced a woefully inadequate plan for *chemical disaster emergency response*--- a 7-hour evacuation by vehicle on Richmond and Madison County's crowded roads; not Over-Pressurization for our children's schools or Home Shelter-In Place for our house bound citizens as has been implemented at Umatilla Oregon years ago by DOA \ FEMA.

They have *failed* miserably in their basic mission to inform and educate our populace concerning CSEPP, particularly on their 7-hour incident. The citizens of Madison need help: I ask you, our senators, congressman, governor, state agencies, county judge and officials, to honor this petition and act to intercede with DOA \ FEMA to start and complete action on the level of maximum protection that they are responsible to provide this community.

The top CSEPP DOA \ FEMA authorities *owe* us a public meeting to address our concerns. We want them to explain their CSEPP deficiencies and responsibilities, and define our CSEPP entitlements.

These CSEPP issues are especially *time critical* for our safety as a special interest group is secretly working to revise Kentucky Law KRS-224 this legislative session. If allowed to pass, this revision will allow Kentucky Environmental Protection Cabinet to accept the DOA's application for a permit to store and destroy the chemicals, <u>without</u> our vital present guarantee of CSEPP demonstration. They and their KRS224 Revision will effectively kill the long overdue chemical disaster emergency response for Madison and surrounding Counties because the DOA will no longer have to comply with Kentucky law. We need to preserve our protective laws and to expand the maxim protection.

NAME \ DATE		ADDRESS		PHONE
Edith Hendricks	10-29-99	1408 Providence Rd.	Richmond, Ky.	606-623-2626
Patricia Larson	10-29-99	319 Bard Farris Dr.	Richmond, KY	606-623-6835
Frances R. Newman	10-30-99	1431 Fairlane Dr.	Richmond Ky	606-623-4713
Sherrie Ross	10-30-99	211 Layne Ct Apt. 1	Berea Ky	606985-0953
Kathy Salmons	10-30-99	230½ Jeffersons	Berea Ky.	606-986-4486
Virginia Turner	10-30-99	1423 Fairlane Dr	Richmond, Ky.	606-623-2480
Lorraine Kong	11-2-99	316 14th St.	" "	606-623-5384
Danny W. Mason	11-2-99	326 W. Lexington Ave	Winchester Ky	606-744-065[illegible]
Sara Lee Pigg	11/3/99	924 Sumbrero Dr.	Richmond, Ky	606-624-2542
Ronnie Spicer	11/3/99	204½ S. 3rd St.	Richmond, Ky	606-623-9375
R Hall	11/4 99	1420 Finland	Richmond Ky	606 623-583[illegible]
Eva Adams	11/4/99	167 Meadowlark Dr,	Richmond, Ky	606-623-3595
Betty Blakemore	11/10/99	205 Clay Dr.	" "	606-623-9457
Aondadna Rollins	11/11/99	1410 Providence Rd	Richmond, Ky	606-624-9347

25 September, 1999

I support the petition by the Concerned Citizen's for CSEPP (Chemical Stockpile Emergency Preparedness Program) Compliance in securing Maximum Protection Chemical Disaster Emergency Response. CSEPP is public law entitlement for all Army toxic chemical weapons storage sites. The DOA has a contract with our community: Public Safety is Number One, Unconditionally. Yet after a decade, they have produced only a ten-hour evacuation by vehicle, not Over-Pressurization of schools or Home Shelter-In-Place as has been implemented at Umatilla, Oregon years ago by DOA \ FEMA. The citizens of Madison County need help; I ask you Senator McConnell to do the same for our emergency public safety as you have accomplished for the Assembled Chemical Weapons Assessment (ACWA) Program and jump start those agencies and officials responsible for CSEPP into action.

PETITIONER'S NAME	MADISON COUNTY KY ADDRESS	HOME PHONE NUMBER
1. Charles Stiles	Box 435 Concord Rd-	623-4385
2. Flossie Stiles	Box - 435 Concord Rd. Richmond, Ky. 40475.	623-4385

I support this petition by the Concerned Citizen's for ***CSEPP*** (Chemical Stockpile Emergency Preparedness Program) Compliance in securing a Maximum Protection Chemical Disaster Emergency Response for Madison County Kentucky.

CSEPP is Public Law *entitlement* for all Army toxic chemical weapons storage sites. The Department of the Army has a contract with our community: **Public Safety is Number One, Unconditionally.** Yet after a decade, they have produced a woefully inadequate plan for *chemical disaster emergency response*--- a 7-hour evacuation by vehicle on Richmond and Madison County's crowded roads; not Over-Pressurization for our children's schools or Home Shelter-In Place for our house bound citizens as has been implemented at Umatilla Oregon years ago by DOA \ FEMA.

They have *failed* miserably in their basic mission to inform and educate our populace concerning CSEPP, particularly on their 7-hour incident. The citizens of Madison need help: I ask you, our senators, congressman, governor, state agencies, county judge and officials, to honor this petition and act to intercede with DOA \ FEMA to start and complete action on the level of maximum protection that they are responsible to provide this community.

The top CSEPP DOA \ FEMA authorities *owe* us a public meeting to address our concerns. We want them to explain their CSEPP deficiencies and responsibilities, and define our CSEPP entitlements.

These CSEPP issues are especially *time critical* for our safety as a special interest group is secretly working to revise Kentucky Law KRS-224 this legislative session. If allowed to pass, this revision will allow Kentucky Environmental Protection Cabinet to accept the DOA's application for a permit to store and destroy the chemicals, <u>without</u> our vital present guarantee of CSEPP demonstration. They and their KRS224 Revision will effectively kill the long overdue chemical disaster emergency response for Madison and surrounding Counties because the DOA will no longer have to comply with Kentucky law. We need to preserve our protective laws and to expand the maxim protection.

NAME \ DATE	ADDRESS	PHONE
Joey Ruckes	P.O. Box 485, WACO	(606)369-3637
Betty Jurgensen	350 Woodland ave	624-9268
Robin Foley	125 Jack Mary Dr.	624-2168
Jerry White	349 Woodland Ave	623-8644
Elvis Terry	351 Woodland Ave	623-8587
Amanda Rolling	1410 Providence Rd	624-93470
Arnet Terry	351 Woodland Ave.	623-8581
Mike Moreland	110 Keenfield	—

Tamara Emerson 123 Dublin Ln. Richmond 40475
Charles W Bolin 124 Maple Hill Dr #4 Richmond
Michelle Turner 1068 Menelaus Rd. Berea, Ky. 40403 985-0187
James L. Turner 1068 Menelaus Rd., Berea, Ky. 40403 (985-0187)
Shane Bess 100 Wanda DR Richmond KY 40475 624-3958
Darrel Hall 112 Winton Dr. Rich. Ky. 40475
Lee Wallace 1117 Menelaus Rd. Berea Ky 40403 985-0210
Shayne S. Emerson
Randy McCloud 417 Garden City Dr. #20 Richmond, Ky. 40475 625-0638
Jason Hall 105 Sycamore Dr. Richmond, Ky 40475 624-1851
Charles McKenzie 105 Sycamore Dr Richmond KY 40475 624-1851
Caroline McKenzie 105 Sycamore Dr Richmond KY 40475 624-1851

Tracy Compton 401 Murray St. 223-5481

Becky Wesley 107 Overlook Ct. Danville 606 854-6186

Clearing Fund 606-365-7147

Jenda Fowles 119 Longview Dr. 624-5793

CITIZENS CSEPP QUESTIONS & COMMENTS
Request Written Response to the CAC and Public

>What are our maximum protection entitlements for a chemical weapons storage site and where can we read this?

nat is a reasonable time for maximum protection completion, it has been +10 years now, we think it is seriously overdue?

>What agencies have the various responsibilities? Is the ultimate responsibility DOA \ DOD?

>Explain the several memorandums of understanding and why they are not completed?

>Why has detailed public information been with held? Is it not required by law?

>When was the request for Madison collective protection budget received by FEMA \ DOA?

>Why did not DOA \ FEMA force improvements and guidance from a 7-hour evacuation for chemical disaster emergency response. It is incredulous to expect a rural county to develop and implement CSEPP?

> We expect a search and rescue as part of response, how will it work?
>Discuss the past inaction and our state's request for assistance, Ky. letter to D. Fisher, May 22, 1998

>Gridlock has been publicly attested to as a long-standing critical CSEPP obstacle, we expected you to offer plans and a platform to lead CSEPP. What will you do now?

>When will EKU receive over-pressurization protection?

y has Umatilla advanced so much further in their CSEPP?
>They have 11 schools over-pressurized, compare & contrast Madison County to their program

>Are the exercises evaluated on both ends of CSEPP - BGAD and Madison County EOC
>What are results?
>Why is it not published?

>Collective protection has been practiced for years in private sector such as LEPC exemplified by Unocal video.
Why has it been delayed here. At least selected private homes could have received a $2 video as they did expensive radios
>Why not work with Red Cross or other volunteer groups such as the scouts, PTA, etc to educate home shelter in place, one group the CCCC volunteered?

>>Much of the above deficiencies could have been avoided with public participation, education and information

>>The government could have used CSEPP as a vehicle for community cooperation had it been managed properly.

>>Many people feel that CSEPP is more important than DEMIL or Treaty.

These items presented to ARMY/FEMA JAN. 2000. at CSEPP forum.
Totally ignored

ACWA
Program Manager Assembled Chemical Weapons Alternatives

comment card

Please Print Clearly:

Event: ~~[illegible]~~

Date: 1-22-04

Name: April Payne

Street Address: 209 Ravo Ct

City: Richmond State: Ky Zip Code: 40475

Telephone (optional): 859-893-1267

E-mail: payne@rudolphtv.net

Your comments:

Are there any programs available to pay for a private citizen to build a safe room in there home. Ie to construct a 20x20 basement room that would be safe in the event of a incident

How useful is the information provided to you?

- ☐ Very Useful
- ☐ Useful
- ☐ Not Useful
- ☐ No Opinion

Could you refer us to another club or organization for a future presentation?

Organization Name: _____

POC: _____

Phone Number: _____

Would you like to join our mailing list?

- ☒ Yes
- ☐ No
- ☐ Already on List

A Partnership for Safe Chemical Weapons Destruction

ACWA
Program Manager Assembled Chemical Weapons Alternatives

comment card

Please Print Clearly:

Event: Pre-application Public Meeting

Date: 1-22-04

Name: Susan Shower

Street Address: 204 Eagle Dr

City: Richmond State: Ky Zip Code: 40475

Telephone (optional): 625-1918

E-mail: Shuma236@hotmail.com

Your comments:

Loved well

How useful is the information provided to you?

- ☐ Very Useful
- ☐ Useful
- ☐ Not Useful
- ☐ No Opinion

Could you refer us to another club or organization for a future presentation?

Organization Name: American Red Cross Daniel Boone Chapter

POC: ~~20~~ 213 West Main St Richmond Ky 40475

Phone Number: 623-1336

Would you like to join our mailing list?

- ☐ Yes
- ☐ No
- ☑ Already on List

A Partnership for Safe Chemical Weapons Destruction

ACWA
Program Manager Assembled Chemical Weapons Alternatives

comment card

Please Print Clearly:

Event: _____

Date: 1/22/04

Name: Jim Beck

Street Address: 301 BlueSky Pkwy

City: Lexington State: KY Zip Code: 40509

Telephone (optional): 859-263-5178

E-mail: jbeck@skilton.com

Your comments:

_____

_____

_____

How useful is the information provided to you?

- [x] Very Useful
- [ ] Useful
- [ ] Not Useful
- [ ] No Opinion

Could you refer us to another club or organization for a future presentation?

Organization Name: _____

POC: _____

Phone Number: _____

Would you like to join our mailing list?

- [ ] Yes
- [ ] No
- [x] Already on List

A Partnership for Safe Chemical Weapons Destruction

ACWA
Program Manager Assembled Chemical Weapons Alternatives

comment card

Please Print Clearly:

Event: RCPA

Date: 1/22/04

Name: NANCY HINDMAN

Street Address: 300 CENTER ST

City: BOREA State: KY Zip Code: 40403

Telephone (optional): 859 985 00 22

E-mail: NANCY.HINDMAN@EKU.EKU

Your comments:
Excellent meeting
well Run - Positive!

How useful is the information provided to you?

- [x] Very Useful
- [ ] Useful
- [ ] Not Useful
- [ ] No Opinion

Could you refer us to another club or organization for a future presentation?

Organization Name: LEAGUE of WOMEN voters

POC:

Phone Number:

Would you like to join our mailing list?

- [x] Yes
- [ ] No
- [ ] Already on List

A Partnership for Safe Chemical Weapons Destruction

Speaker Sign-In Sheet

If you wish to voice your comments or questions during the Public Comment Period, please sign in. You will be called in the order listed below.

	Name (Please print clearly)	Organization/Affiliation
1	WM. SCRIVNER	Concerned Citizen for CSEPP Compliance
2		
3		
4		
5		
6		
7		
8		
9		
10		
11		
12		
13		
14		
15		
16		
17		
18		
19		
20		

122 total

RCRA Public Meeting
January 22, 2004
Registration/Sign In

(1)

20

Please print: Name

	Name	Address	Phone	Fax	Email Address	Affiliation
1	Elizabeth Crowe	501 Center St. Berea	859-986-0868	—	elizabeth@cwwg.org	CWWG / KEF
2	Karen Mattingly	~~104 Van Winkle Berea~~	(859)985-9912	—	jmhigro@adelphia.net	—
3	NANCY HINDMAN	300 Center St	(859)985-0022			
4	Casey Porter	1963 Hwy 1016 Berea ky	859-200-8407		kc1919@hotmail.com	—
5	Michael Bryant	560 S. Irvineland ct	859-624-7267		mfk6@juno.com	MADISON CO CSEPP
6	Sanjay Sarariya	APG, MD	410-436-9631		Sanjay.Sarariya@ens.army.mil	SAIC
7	John Mayers	141 NEWLE CREEK #100	859 264-8555		JMRAINCI@MSN	CONTRACTOR
8	Stephen McSpir	1425 Fairlane Drive	859-625-5377		Stp	
9	Teresa Smith	207 W DIXIE London	606 330 0585			
10	Roger Barger	316 Boone Way	623-8906			County Magistrate
11	Robert [illegible]	1018 E-New Circle lex.	859-252-8872		1bew.lexnath@verizon	not 1 bew
12	[illegible]	90 Airport Rd	607-5719			
13	J. Christman	501 Brockton	(859)22-2516	—	john and jess@netzero.com	EKU-EHS dept
14	M. Hannon	248 APACHE DR Paint Lick 40403	859 986 7186			
15	M.A. Ghosal	110 Chestnut St. Berea 40403	859-986-7479		mamann.ghosal@eku.edu	~~DEPP DAQ~~
16	Herbert Campbell	803 Schoolhouse Rd. Frankfort	502 573 3382			DEPP DAQ
17	LYLE A. WALKER	P.O. BOX 143 McKee Ky. 40447	606-965-3151			M.A. WALKER
18	Sue Chenault	POB 44	859 623 2935		SRChenault@ipro.net	
19	David Stypes	133 Saratoga Circle Rich.	859-624-9812			
20	JOHN CAPILLO	PO Box 467 BEREA	859 986 0868			

RCRA Public Meeting
January 22, 2004
Registration/Sign In

(2) 16

Please print: Name	Address	Phone	Fax	Email Address	Affiliation
1 Rick Hanna		865-220-2234			BNI
2 Aaron JAMISON	4790 Todds Rd Lex, KY 40509	859 260 7760	260 1256	ajamison@MICAHGROUP.com	MICAH
3 April Payne	209 RaNo Ct Richmond Ky 40475	859-893-1267		payne@adelphia.Net	
4 Robert Payne	209 RaNo Ct Richmond Ky 40475	859-893-1267	—	—	—
5 Gary Risk	2375 Calnalpra Loop Rd	859-6234167	623-6365		
6 Kai Burk	413 Corman Dr. Nicholasville KY 40356	859-881-4286			
7 Craig Williams	P.O. Box 467 Berea KY 40403	859 986 7565	859 986 2695	Craig@CWWG.org	CWWG
8 Jeremy Rigney	4346 Simpson Lane Richmond	859-623-5794		jeremy.rigney@suntrust.com	
9 DONMARIGREN	307 BROOKS Rd RICH	859 623-7780			
10 Colleen Kadin	156 Pinehurst Dr Frankfort	(502) 875-4921		Colleen.Kadin@KY.gov	KY DPH
11 Hal Holmes	412 Springfield Dr. Richmond KY	623-7419			
12 E. Everard	306b Remington Ct	—			
13 Danielle Capillo	CPO 348 Berea KY 40404	—	—		Berea College HEAL
14 Corrie Stotts	EKU	622-2961		corrie.stotts@eku.edu	
15 CHARLES SCHINDLER	311 FOREST STREET BEREA 40403	(859) 986-1834	—	schindlers2@alltel.net	AIR BACTERIA, H_2O DRINKER, FOOD EATER
16 Roenke	8146 Edgewood Dr Lex 40515	859 971 0180			BGAD
17					
18					
19					
20					

RCRA Public Meeting
January 22, 2004
Registration/Sign In

③ ✓

Please print: Name	Address	Phone	Fax	Email Address	Affiliation
1 Peyton Creighton	121 Sandlot Lane Richmond	6245269	622 1939	Peyton.Creighton@eku.edu	EKU
2 D Gary Brown	239 Dinney Building	622 1992	622 1939	Gary.Brown@eku.edu	EKU
3 Carolyn Harvey	403 Chase Clayborne GH 2	622-6342	622-1939	carolyn.harvey@eku.edu	EKU
4 Nancy Taggart	380 Big Hill Ave				Richmond Regist
5 Robin Reeves	266 White Stile Berea	986-0692			
6 Tom Pure	114 Redwood Dr Richmond	623 4280			
7 Mac Pure	" "	" "			
8 Larry Dixon	300 Anglewood Dr Richmond KY	626-1457			Rolli
9 Ralph Collins	KY DEP - FRANKFORT	502-564-2150		RALPH.COLLINS@KY.GOV	DEP
10 Cindy Gardner	110 Old Wallaceton Berea	859-985-8733		cpaphame@addphia.net	TPS
11 Pat Tucker	105 Winesap Dr.	859-625-5509			
12 Robert E. Bagby	120 Pleasant Ridge drive	859 623-8542			Civic Rep.
13 [illegible]	125 Meadowlark	200-4407			Me
14 Logan Weiler	856 Smith Lane	859 203 7471			
15 Kirk Kapitzke	1171 Lakewood Park	859 268-8221			BGCA
16 Jim Jones	12005 Irvine Rd Winchester KY 40391	859-278-8458			
17 Lyle Cook	109 Parkhills Ct	859-624-3931			EKU
18 Keith Mohon	5 Wellington Ct	859-626-0567	8596260567	nohow200@ipcorp.net	
19 Gary Abney	113 Brookview Dr	859-625-2108			
20 Andy Burns	923 Turnberry	8596084428			

RCRA Public Meeting
January 22, 2004
Registration/Sign In

(4) 12

Please print: Name	Address	Phone	Fax	Email Address	Affiliation
1 William CRAFT	102 PAN FERRO CT Berea 40403	986-4727			
2 Jessica Richardson	1151 Taylor Rd Berea	228-0135			CWWG
3 Doug Hindman	300 Center St Berea	985-0022			Ky CAC
4 Melissa Neal	257 Maryland Dr. Apt. 13	200-3652			CSEPD
5 Roger Osborne	224 Patsy Dr. Apt 4	624-0829			Progress
6 Jim Lafuzzy	FLLeon Ky	7946280			
7 Brenda Fay	411 Wallace Richmond	623-1139			
8 JESSE CAIN	129 E. WALNUT	623-6816			City Richmond
9 A Reece	27 Cassie Way	552-7396			OrcMed
10 Paul Bell	4315 Preston Hwy	502-368-2526		pbell@chewlocal89.com	
11 Christina Shackelford	239 Waterford Way, Somerset	606-678-9744		crshackel@yahoo.com	EKU Stud.
12 Robert Miller	416 Bethlehem Rd, Dreyfus	859-986-3921			CAC, COCAB
13					
14					
15					
16					
17					
18					
19					
20					

RCRA Public Meeting
January 22, 2004
Registration/Sign In

(5) 20

Please print: Name	Address	Phone	Fax	Email Address	Affiliation
1 ED BERGSTROM	370 ROSE ST. #6	(859) 494-0703		etbergstrom@yahoo.com	UK student
2 ERIC RINGO	KYDEP 14 Reilly Rd Frankfort KY	502 564-6716		ERIC.RINGO@KY.GOV	KYDEP
3 April Webb	KYDEP 14 Reilly Rd Frankfort	502 564-6716		April.Webb@ky.gov	KDEP
4 Dennis Cantrell	2091 Kingston Hwy, Richmond	625 6589		dennis.cantrell@us.army.mil	BGCA
5 Jim Richmond	APG, MD	410-436-5524		james.a.richmond@us.army.mil	PMACWA
6 WM SCRIVNER	316 Savannah Dr Rich	624-6888		WRSCRIVNER@YahooCom	Citizen
7 Scott McCoy	510 Letcher Ave.	(859) 623-6640			
8 Tommy Adams	100 W. WALNUT, PASADENA, CA	626-440-3078		tmadams@bechtel.com	BPBGT
9 Dale Ballinger	110 Old Wallaceton Berea	859 985-8733		daleballinger@tpscabling.com	
10 Jim Beck	301 Blue Sky Pkwy Lex.	859-268-5178		jbeck@skilton.com	
11 [illegible]	H-L				
12 Bill Wall	220 Tazwell dr	859-626-3247			
13 Worley Johnson	100 Boone Way	859-622-1940		worley.johnson@eku.edu	
14 Peter Mathews	334 Highland Park Dr	859-626-5878		pmathews@herald-leader.com	Madco Concerned Citizens
15 Kathy Flood	PO Box 463 Richmond	859-623-7429			
16 [illegible]	9801 Dobney Corr Dr.	502-326-0976		lnolan@rosslandings.com	Ross L
17 RICHARD SMART	419 W. MAIN ST.	859 623-7876		smart@bennetthouse.com	THE BENNETT HOUSE
18 Diane Claybaugh	P.O. Box 937, Richmond KY	859-625-0997		dbclayba@Bechtel.Com	BPBG
19 Kelley McBride	110 Bolt-O-Link Dr.				Citizen
20 Jody McBride	" "				

RCRA Public Meeting
January 22, 2004
Registration/Sign In

(6) 2

Please print: Name	Address	Phone	Fax	Email Address	Affiliation
1 Jay Dixon	2008 Lucile Dr Richmond	369-5188	369-5468		
2 Amy Hall	333 Charlie Norris Rd Richmond	369-5192		hugatree99@yahoo.com	
3 Jim Rooney	2300 Red House Rd				
4 Bryan Makinen	646 Univ. Shop. Ctr Richmond	623-0535			PAC
5 Doris Wyatt	225 Bryan Ave Berea	986-9204			~~Housing~~ Authority of Berea
6 George Wyatt	"	"			Berea City Council
7 Greg Burnett	251 Mt Rushmore Dr #7	624-9882			EKU
8 Jim Rousey	422 EST ILL ST, BEREA	985-0289			MCMD
9 Ken Liberty	301 Highland Park	625-1665			
10 CARL RICHARDS	560 S Keene Land Dr.	624-4787			MADISON Co EMA/CSEPP
11 Todd Willis	6436 Spears Point Lane Lexington Ky	293 7486			
12 Mel Moliassa		625-0962			Bechtel
13 Neal Mieson		625-6918			BGCA
14 Joe Elliott		625-5615			BGAD
15 Tim Griffith	163 Courage Rd. Waco	985-0777			FLU.O.E. 181st
16 Mike Cole	Clearfield Ky	780-4483			
17 Susan Shomer	Daniel Boone Chap ARC	623-1336		Gresusan@gx.net	Red Cross
18 Jack Smith	162 Mt VIEW DR BEREA	986-2887			
19 Ron Ruhl	167 Whispering Woods-Pal	623 3252			
20 GARRY IRWIN	175 E. HPITI Rd Berea Ky	985-9561	Same	THEIRWINS@AOL.COM	Net

RCRA Public Meeting
January 22, 2004
Registration/Sign In

Please print:

	Name	Address	Phone	Fax	Email Address	Affiliation
1	Doug Engel	1255 N. Senate Indianapolis, IN 46202	317-917-5005	317-638-6146	doug.t.engel@jci.com	Johnson Controls, Inc.
2	Steve McKnight	9864 Richmond Rd, Paint Lick	859-925-4710		civguy@alltel.com	
3	Janet Scanlon	1308 Continental Dr Ste J	443 372-129-		jscanlm@geo-centers.com	FOCUS
4	Henry Moskal	187 General Cleburne Dr	859 626 0302		rcm125@adelphia.net	FOCIS
5	Logan Weiler III	90 Airport Rd, Frankfort 40601	502 6075725		logan.weiler@ky.ngb.army.mil	KyEM
6	Steve Weaver	2721 Rotsbinsville Loop	859-624 9583			
7	Tom Frazier	110 Castle Dr. Berea Ky	859-228-0030		jtbereaky@adelphia.net	
8	Dave Weigand	750 Bratcher Ln. Berea 40403	228-0186		DLWeigand@Netzero.net	Berea for Peace
9	Bill St. Pierre	202 Perkins Richmond EKU	622-8842		bill.stpierre@eku.edu	EKU
10	Wade Alexander	520 General Drive Crutfi	626-1009		RICHMONDWADE@AOL.COM	
11	Jon Ware	ACWA APC	410-436-2720			
12	Robert R Blythe	1006 Altamont St Rich 40475	859 624 1390		rblythe@richmond.ky.us	
13	Bob Helton	1509 Pine Needles Ln	859-223-4708		bob.helton@chemkleuntnet.ng.com	
14	Stephanie McSpirit	1025 Fairo Lane Richmond KY 40475	859.625.5377		Stephanie.McSpirit@eku.edu	
15						
16						
17						
18						
19						
20						