REVIEW OF BIOTREATMENT, WATER RECOVERY, AND BRINE REDUCTION SYSTEMS FOR THE PUEBLO CHEMICAL AGENT DESTRUCTION PILOT PLANT

Committee on Review of Biotreatment, Water Recovery, and Brine Reduction Systems for the Pueblo Chemical Agent Destruction Pilot Plant

Board on Army Science and Technology

Division on Engineering and Physical Sciences

NATIONAL RESEARCH COUNCIL
OF THE NATIONAL ACADEMIES

THE NATIONAL ACADEMIES PRESS
Washington, D.C.
www.nap.edu

Copyright © National Academy of Sciences. All rights reserved.

THE NATIONAL ACADEMIES PRESS • 500 Fifth Street, NW • Washington, DC 20001

NOTICE: The project that is the subject of this report was approved by the Governing Board of the National Research Council, whose members are drawn from the councils of the National Academy of Sciences, the National Academy of Engineering, and the Institute of Medicine. The members of the committee responsible for the report were chosen for their special competences and with regard for appropriate balance.

This study was supported by Contract No. W911NF-12-01-0126 between the National Academy of Sciences and the U.S. Army. Any opinions, findings, conclusions, or recommendations expressed in this publication are those of the author(s) and do not necessarily reflect the views of the organizations or agencies that provided support for the project.

International Standard Book Number-13: 978-0-309-26393-1
International Standard Book Number-10: 0-309-26393-X

Limited copies of this report are available from Board on Army Science and Technology, National Research Council, 500 Fifth Street, NW, Room 940, Washington, DC 20001; (202) 334-3118.

Additional copies of this report are available from the National Academies Press, 500 Fifth Street, NW, Keck 360, Washington, DC 20001; (800) 624-6242 or (202) 334-3313; http://www.nap.edu.

Cover: Photographs courtesy of Pueblo Chemical Agent Destruction Pilot Plant staff.

Copyright 2013 by the National Academy of Sciences. All rights reserved.

Printed in the United States of America

Copyright © National Academy of Sciences. All rights reserved.

THE NATIONAL ACADEMIES

Advisers to the Nation on Science, Engineering, and Medicine

The **National Academy of Sciences** is a private, nonprofit, self-perpetuating society of distinguished scholars engaged in scientific and engineering research, dedicated to the furtherance of science and technology and to their use for the general welfare. Upon the authority of the charter granted to it by the Congress in 1863, the Academy has a mandate that requires it to advise the federal government on scientific and technical matters. Dr. Ralph J. Cicerone is president of the National Academy of Sciences.

The **National Academy of Engineering** was established in 1964, under the charter of the National Academy of Sciences, as a parallel organization of outstanding engineers. It is autonomous in its administration and in the selection of its members, sharing with the National Academy of Sciences the responsibility for advising the federal government. The National Academy of Engineering also sponsors engineering programs aimed at meeting national needs, encourages education and research, and recognizes the superior achievements of engineers. Dr. Charles M. Vest is president of the National Academy of Engineering.

The **Institute of Medicine** was established in 1970 by the National Academy of Sciences to secure the services of eminent members of appropriate professions in the examination of policy matters pertaining to the health of the public. The Institute acts under the responsibility given to the National Academy of Sciences by its congressional charter to be an adviser to the federal government and, upon its own initiative, to identify issues of medical care, research, and education. Dr. Harvey V. Fineberg is president of the Institute of Medicine.

The **National Research Council** was organized by the National Academy of Sciences in 1916 to associate the broad community of science and technology with the Academy's purposes of furthering knowledge and advising the federal government. Functioning in accordance with general policies determined by the Academy, the Council has become the principal operating agency of both the National Academy of Sciences and the National Academy of Engineering in providing services to the government, the public, and the scientific and engineering communities. The Council is administered jointly by both Academies and the Institute of Medicine. Dr. Ralph J. Cicerone and Dr. Charles M. Vest are chair and vice chair, respectively, of the National Research Council.

www.national-academies.org

Copyright © National Academy of Sciences. All rights reserved.

Copyright © National Academy of Sciences. All rights reserved.

COMMITTEE ON REVIEW OF BIOTREATMENT, WATER RECOVERY, AND BRINE REDUCTION SYSTEMS FOR THE PUEBLO CHEMICAL AGENT DESTRUCTION PILOT PLANT

ROBERT A. BEAUDET, University of Southern California, Pasadena, *Chair*
PEDRO J.J. ALVAREZ, Rice University, Houston, Texas
EDWARD J. BOUWER, Johns Hopkins University, Baltimore, Maryland
DAVID L. FREEDMAN, Clemson University, Clemson, South Carolina
KIMBERLY L. JONES, Howard University, Washington, D.C.
RONALD M. LATANISION, NAE,[1] Exponent, Inc., Natick, Massachusetts
MICHAEL J. LOCKETT, NAE, University at Buffalo, State University of New York
PAIGE J. NOVAK, University of Minnesota, Minneapolis
GENE F. PARKIN, University of Iowa, Iowa City
RONALD F. PROBSTEIN, NAS[2]/NAE, Massachusetts Institute of Technology, Cambridge
ROBERT B. PUYEAR, Independent Consultant, Chesterfield, Missouri
VERNON L. SNOEYINK, NAE, University of Illinois, Urbana

Staff

HARRISON T. PANNELLA, Study Director
NIA D. JOHNSON, Senior Research Associate
ANN F. LARROW, Research Assistant (from April 1 to August 10, 2012)
JOSEPH L. PALMER, Senior Program/Project Assistant

[1]NAE, National Academy of Engineering.
[2]NAS, National Academy of Sciences.

Copyright © National Academy of Sciences. All rights reserved.

BOARD ON ARMY SCIENCE AND TECHNOLOGY

ALAN H. EPSTEIN, Pratt & Whitney, East Hartford, Connecticut, *Chair*
DAVID M. MADDOX, Independent Consultant, Arlington, Virginia, *Vice Chair*
DUANE ADAMS, Independent Consultant, Carnegie Mellon University (retired), Arlington, Virginia
ILESANMI ADESIDA, University of Illinois at Urbana-Champaign
EDWARD C. BRADY, Strategic Perspectives, Inc., Fort Lauderdale, Florida
MARY E. BOYCE, Massachusetts Institute of Technology, Cambridge
W. PETER CHERRY, Independent Consultant, Ann Arbor, Michigan
EARL H. DOWELL, Duke University, Durham, North Carolina
JULIA D. ERDLEY, Pennsylvania State University, State College
LESTER A. FOSTER, Electronic Warfare Associates, Herndon, Virginia
JAMES A. FREEBERSYSER, BBN Technology, St. Louis Park, Minnesota
RONALD P. FUCHS, Independent Consultant, Seattle, Washington
W. HARVEY GRAY, Independent Consultant, Oak Ridge, Tennessee
JOHN J. HAMMOND, Lockheed Martin Corporation (retired), Fairfax, Virginia
RANDALL W. HILL, JR., University of Southern California Institute for Creative Technologies, Playa Vista
JOHN W. HUTCHINSON, Harvard University, Cambridge, Massachusetts
ROBIN L. KEESEE, Independent Consultant, Fairfax, Virginia
ELLIOT D. KIEFF, Channing Laboratory, Harvard University, Boston, Massachusetts
WILLIAM L. MELVIN, Georgia Tech Research Institute, Smyrna
ROBIN MURPHY, Texas A&M University, College Station
SCOTT PARAZYNSKI, University of Texas Medical Branch, Galveston
RICHARD R. PAUL, Independent Consultant, Bellevue, Washington
JEAN D. REED, Independent Consultant, Arlington, Virginia
LEON E. SALOMON, Independent Consultant, Gulfport, Florida
JONATHAN M. SMITH, University of Pennsylvania, Philadelphia
MARK J.T. SMITH, Purdue University, West Lafayette, Indiana
MICHAEL A. STROSCIO, University of Illinois, Chicago
DAVID A. TIRRELL, California Institute of Technology, Pasadena
JOSEPH YAKOVAC, President, JVM LLC, Hampton, Virginia

Staff

BRUCE A. BRAUN, Director
CHRIS JONES, Financial Manager
DEANNA P. SPARGER, Program Administrative Coordinator

Copyright © National Academy of Sciences. All rights reserved.

Preface

The Army is preparing to destroy all the chemical agent munitions stored at the Pueblo Chemical Depot in Colorado. Construction of the facility that will perform this task, the Pueblo Chemical Agent Destruction Pilot Plant (PCAPP), was completed in late 2012, and the facility is currently undergoing systemization (pre-operational testing) until agent destruction operations begin in the first half of 2015. The depot stores a stockpile of projectiles and mortars, all of which contain the blister agent called mustard that will be destroyed by hydrolysis, followed by biotreatment of the hydrolysate. Because the facility requires large quantities of water, which is a limited commodity in Colorado, as much of the water as possible will be purified and recycled back through the facility.

The site contractor team, Bechtel Pueblo, which is headed by Bechtel National, Inc., and includes Parsons Government Services, Inc.; URS Corporation; and Battelle Memorial Institute, has selected Veolia Water Solutions & Technologies as the designer and provider of the water recovery and brine reduction systems. This technology provider has had extensive experience in designing and constructing water purification systems. However, because the nature of the effluent to be treated at PCAPP is unique in its chemical composition and is unlike any effluent treated at any other facility, the PCAPP team and technology provider expect that adjustments will have to be made to operations of the system during systemization and the chemical agent start-up phase of the plant. Thus, they asked the National Research Council (NRC) to establish a committee to review the water recovery and brine reduction systems and to identify risks, possible problems, and modifications that may be required.

After three meetings had taken place and the committee was well engrossed in the study, the Army requested that the study project be extended to include the biotreatment system that treats the hydrolysate produced by the neutralization of the mustard. The biotreatment process produces the bulk of the water to be treated in the water recovery and brine reduction systems. Thus, four new members with expertise in biotreatment were added to the Committee on Review of Biotreatment, Water Recovery, and Brine Reduction Systems for the Pueblo Chemical Agent Destruction Pilot Plant; the delivery date was extended, and the committee held two additional meetings.

Unfortunately, the committee was partially hampered by not having access to information that included some bench tests for the brine reduction system considered to be proprietary by Veolia Water Solutions & Technologies and, therefore, had to depend on receiving direct answers to its question in many cases. This report presents the committee's findings and recommendations with the above caveat.

I and the committee thank particularly PCAPP chief scientist George Lecakes and his team, consisting of Rebecca Spiva, Yakup Nurdogan, Ron Entz, Bill Steedman, Kate Furman, and Paul Usinowicz, which took the time to answer our extensive sets of questions. The committee also had a fruitful teleconference with Mark Patterson from Veolia Water Solutions & Technologies.

In addition, we thank the NRC staff, including Harrison T. Pannella, the study director; Nia D. Johnson, senior research associate; Ann F. Larrow, research assistant; and Joseph L. Palmer, senior project assistant, for their support and assistance in producing this report. The final product could not have been produced without their support.

Robert A. Beaudet, *Chair*
Committee on Review of Biotreatment,
Water Recovery, and Brine Reduction Systems for the
Pueblo Chemical Agent Destruction Pilot Plant

Copyright © National Academy of Sciences. All rights reserved.

Acknowledgment of Reviewers

This report has been reviewed in draft form by individuals chosen for their diverse perspectives and technical expertise, in accordance with procedures approved by the National Research Council's (NRC's) Report Review Committee. The purpose of this independent review is to provide candid and critical comments that will assist the institution in making its published report as sound as possible and to ensure that the report meets institutional standards for objectivity, evidence, and responsiveness to the study charge. The review comments and draft manuscript remain confidential to protect the integrity of the deliberative process. We wish to thank the following individuals for their review of this report:

Richard J. Ayen, Independent Consultant, Jamestown, Rhode Island,
Ronald G. Ballinger, Massachusetts Institute of Technology,
Rick Bonds, Black & Veatch,
Clyde L. Briant, NAE, Brown University,
Willie F. Harper, Air Force Institute of Technology,
David S. Kosson, Vanderbilt University,
Bruce E. Rittmann, NAE, Arizona State University, and
W. Leigh Short, Consultant (retired), Williamstown, Massachusetts.

Although the reviewers listed above have provided many constructive comments and suggestions, they were not asked to endorse the conclusions or recommendations nor did they see the final draft of the report before its release. The review of this report was overseen by George Tchobanoglous, NAE, University of California, Davis. Appointed by the NRC, he was responsible for making certain that an independent examination of this report was carried out in accordance with institutional procedures and that all review comments were carefully considered. Responsibility for the final content of this report rests entirely with the authoring committee and the institution.

Copyright © National Academy of Sciences. All rights reserved.

Contents

SUMMARY 1

1 BACKGROUND 6
Brief Description of the PCAPP Process, 6
Statement of Task, 8
Scope, 8
Organization of This Report, 9
References, 9

2 THE PCAPP BIOTREATMENT SYSTEM 10
General Description of the Bioreactor System, 10
Committee's Review of the System, 12
Complexity of the Influent Stream and Related Toxicity/Inhibition, 13
pH Impacts on Biodegradation, 16
Temperature Impacts on Biodegradation, 16
Solids Buildup Concerns, 17
Oxygen Demand and Flux Issues, 18
Start-up Issues, 20
Analysis and Composition of the Effluent and Off-Gas from the Bioreactors, 21
References, 21

3 THE WATER RECOVERY AND BRINE REDUCTION SYSTEMS 23
Acid Addition, Feed/Distillate Heat Exchange, and CO_2 Stripping, 23
Evaporation with Steam Compression, 25
Crystallizer Description, 26
Belt Filtration, 27
Condensation of Vapor from the Deaerator, Evaporator, and Crystallizer, 27
Activated Carbon Adsorption, 28
Uses of Carbon, 28
Distillate Carbon Filters, 28
Issues Related to the Water Flow Stream, 28
Drinking Water Quality Requirement, 30
The Crystallizer, 30
The Evaporator, 31
The Deaerator, 31
Issues Related to the Gas Flow Stream, 31
Issues Related to the Solids Flow Stream, 31

Copyright © National Academy of Sciences. All rights reserved.

Issues Related to the Entire BRS, 31
References, 32

4 MATERIALS OF CONSTRUCTION REVIEW 33
Materials of Construction for the Biotreatment, Water Recovery, and Brine Reduction Systems, 33
Overview, 33
Corrosion Monitoring, 34
Corrosion-Monitoring Methods, 35
Use of Metallic Coupons, 36
Electrical Resistance Probes, 36
Polarization Resistance Measurement, 36
Electrochemical Noise, 36
Other Considerations Relevant to Corrosion Monitoring, 38
References, 38

APPENDIXES

A Table of Materials of Construction 39
B Corrosion-Monitoring Guides and Testing Materials Suppliers 42
C Biographical Sketches of Committee Members 43
D Committee Meetings 47

Copyright © National Academy of Sciences. All rights reserved.

Tables and Figures

TABLES

1-1 Summer and Winter Quantities and Percentages for the Units Using the Recycled Water at PCAPP, 7

2-1 Key Operating and Feed Characteristics for the Immobilized Cell Bioreactor Units, 13
2-2 HD Hydrolysate Characterization from 2003 Biotreatment Testing, 15

3-1 Design Basis for Combined System Feed to PCAPP Water Recovery and Brine Reduction Systems, 25
3-2 Mass Flow Rates for Combined Distillates to and from Brine Reduction System Distillate Activated Carbon Filters, 29
3-3 Contaminants of Potential Concern in the Brine Reduction System Effluent and Applicable Drinking Water Standards, 30

4-1 PCAPP Biotreatment Area Materials of Construction, 34

FIGURES

S-1 Conceptual diagram for the 16 immobilized cell bioreactor (ICB) treatment units during planned normal operation, 3
S-2 Block diagram of the brine reduction system, 4

1-1 Overview block diagram of the PCAPP biotreatment, water recovery, and brine reduction systems, 7

2-1 Conceptual diagram for the 16 immobilized cell bioreactor (ICB) treatment units during planned normal operation, 11
2-2 Two of the four biotreatment modules at PCAPP, each of which has four immobilized cell bioreactor units, 11
2-3 Major components of one of four biotreatment modules at PCAPP, 12

3-1 Block diagram of the brine reduction system, 24
3-2 Brine reduction system installation at PCAPP, 24
3-3 Simplified diagram of the 596-tube brine concentrate (BC) evaporator and BC vapor washer, 26
3-4 Simplified diagram of the crystallizer, 27
3-5 Block diagram of the carbon filter system, 28

4-1 A typical polarization resistance diagram, 37
4-2 Three-electrode polarization resistance probe (a) and schematics of installation of the probe in pipe fitting (b), in a welded line (c), and in a pipe tee (d), 37

Copyright © National Academy of Sciences. All rights reserved.

Acronyms and Abbreviations

ABCDF	Aberdeen Chemical Agent Disposal Facility
ACWA	Assembled Chemical Weapons Alternatives
BC	brine concentrate
BOD	biochemical oxygen demand
BRS	brine reduction system
BTA	biochemical treatment area
COD	carbon oxygen demand
CSTR	continuous-flow stirred tank reactor
DAP	diammonium phosphate
DOC	dissolved organic carbon
DOD	Department of Defense
EDT	explosive destruction technology
GAC	granular activated carbon
HD	distilled mustard agent
HT	distilled mustard mixed with bis(2-chloroethylthioethyl) ether
ICB	immobilized cell bioreactor
MCL	maximum contaminant level
MLSS	mixed liquor suspended solids
MOC	materials of construction
MWS	munition washout system
NRC	National Research Council
OTS	off-gas treatment system
PCAPP	Pueblo Chemical Agent Destruction Pilot Plant
PCD	Pueblo Chemical Depot
PEO-ACWA	Program Executive Office for Assembled Chemical Weapons Alternatives
SBR	sequencing batch reactor
SRT	solids retention time
SOUR	specific oxygen uptake rate
TDG	thiodiglycol
TOC	total organic carbon
TSS	total suspended solids
VOC	volatile organic compound
VSS	volatile suspended solids
WRS	water recovery system
WRS-BRS	water recovery system and brine reduction system

Copyright © National Academy of Sciences. All rights reserved.

Summary

Under the direction of the Department of Defense, the U.S. Army Element known as the Assembled Chemical Weapons Alternatives (ACWA) program will destroy the remainder of the outdated U.S. stockpile of chemical weapons that are in storage at two sites: the Pueblo Chemical Depot (PCD) in Colorado and the Blue Grass Army Depot in Richmond, Kentucky. The PCD stockpile consists solely of mustard blister agent in the distilled mustard agent (HD) and distilled mustard mixed with bis(2-chloroethylthioethyl) ether (HT) forms. This agent resides in 105-mm and 155-mm projectiles and in 4.2-inch mortar rounds. Together, these number approximately 780,000 munitions that contain a total of about 2,600 tons of agent.

The Pueblo Chemical Agent Destruction Pilot Plant (PCAPP) is named a pilot plant because many of the processes used for destroying the agent and munition bodies have not been used before. Chemical neutralization (hydrolysis) with hot (194°F) water will be used to destroy the mustard agent. The primary product present in the resulting hydrolysate is thiodiglycol (TDG), a Schedule 2 compound that must be destroyed to comply with the requirements of the Chemical Weapons Convention treaty. The hydrolysate will subsequently undergo biotreatment in immobilized cell bioreactors (ICBs), and the effluent from those units will undergo further treatment for purposes of water recovery. The feed streams to the ICBs and to downstream processes will be first-of-a-kind applications of the technologies used. Agent destruction operations are planned to begin in the first half of 2015 and continue for 3 to 5 years.

The ICBs are designed to remove at least 95 percent of the produced TDG in the hydrolysate. Besides the TDG that is mineralized to CO_2, sulfuric acid, and water, a large quantity of precipitates and biomass associated with bacteria metabolizing the TDG is also produced (2,500 to 3,300 lb/day). The effluent from the ICBs, including biomass and other suspended solids, will be blended with boiler and cooling tower blowdown water and reject water from a reverse osmosis process during introduction to the combined water recovery system. The combined water recovery system (WRS) and brine reduction system (BRS) will process approximately 145,000 gallons per day (gpd) of the combined ICB effluent from the biotreatment system and utility wastewaters. The BRS is designed to produce high-quality water for reuse in upstream processes. PCAPP intends to recycle at least 80 percent of the water back into the process after treatment.

The WRS-BRS consists of two major unit operations. The blended feed stream flows to an evaporator where recycled water is produced, leaving a more concentrated brine. The brine concentrate (BC) from the evaporator is sent to the crystallizer, which concentrates the brine further and produces more recycled water. The distillate (water) from the evaporator and the crystallizer both pass through carbon filters for removal of any residual constituents. Solids produced in the crystallizer are dewatered in a filter press and are sent off-site to a hazardous waste disposal site.

The product water from the BRS must be of sufficient quality to enable it to be recycled in the plant. Permitting requirements mandate that the product water must be adequate as a substitute for well water, indicated by the ability of the water to meet primary drinking water standards.

Because the PCAPP water recovery system is a technology that has not been used at chemical munitions destruction facilities before, the program executive officer for ACWA (PEO-ACWA) requested that the National Research Council (NRC) initiate a study to review the PCAPP WRS-BRS that had already been installed at PCAPP. This study had been in progress for 5 months when in October 2012, after the originally constituted committee had already met three times, PEO-ACWA requested and sponsored an expansion of the statement of task to include a review of the biotreatment area (BTA). The expanded statement of task for what became the Committee on Review of Biotreatment, Water Recovery, and Brine Reduction Systems for the Pueblo Chemical Agent Destruction Pilot Plant is given below:

Copyright © National Academy of Sciences. All rights reserved.

The National Research Council will establish an ad hoc committee to:

Original Tasks:

- Obtain information from the equipment vendor on BRS installations that treat comparatively similar biotreatment effluents, and determine that operability of these systems has been acceptable.
- Review materials of construction for the WRS and BRS to judge whether or not performance can be expected to be adequate over the anticipated operational life of the plant.
- Ascertain the likelihood that the quality of the recycled water will meet requirements for its use as plant process water at PCAPP.
- Address the possibility of fouling of the WRS and BRS equipment due to migration of microorganisms from the bioreactors.

New Tasks:

- Review the results of mustard agent-only hydrolysate biotreatment studies carried out prior to 1999, including the ICB-based bench-scale study reported in ERDEC-TR-497 and prior SBR-based bench-scale studies. Also, reexamine the results from the 1999-2004 mixed agent and energetics testing in light of current plans to biotreat mustard agent-only hydrolysate.
- Review the current design, systemization approach, and planned operating conditions for the biotreatment process as well as the water recovery and brine reduction systems (WRS and BRS), and recommend activities that should be performed as part of systemization at the Pueblo Chemical Agent Destruction Pilot Plant (PCAPP) to provide additional confidence in the operational readiness of the plant.

PCAPP had been designed over the course of the prior decade, and construction was essentially completed by autumn of 2012; therefore, the committee limited its concerns, findings, and recommendations to problems that might occur during systemization (pre-operational testing) and during agent processing, with a focus on how PCAPP might respond to operational circumstances and problems that might occur.

The stipulations pertaining to the rules under the Federal Advisory Committee Act by which the NRC performs studies (other than those involving classified materials) require that all reference materials used to support study reports be made available to the public upon a Freedom of Information Act request. Consequently, the committee was limited in the information that it could use, because the BRS technology provider, Veolia Water Solutions & Technology, considered the design of its process equipment to be proprietary. Also, the technology provider's reports on testing of surrogate feeds that led to the BRS design were also labeled proprietary and, except for two block diagrams, were not available to the committee. Thus, for the review and analysis of the BRS in particular, the committee depended on the PCAPP contractor and the technology provider for responses to its questions.

The committee identified several overarching concerns, findings, and recommendations that are expressed throughout the report. These are as follows:

- The feed, consisting of hydrolysate and recycled process water, is unique, complex, and not well defined. This may present challenges and require PCAPP to be particularly flexible and proactive in the operation of the plant.
- Insufficient or inconsistent information limited the committee's ability to provide a thorough review of some aspects of the plant.
- Consequently, a conservative approach of starting the ICB units sequentially instead of simultaneously is strongly urged.
- Continuous and extensive process monitoring throughout the BTA-WRS-BRS is required to prevent system failure. A comprehensive corrosion monitoring program is also necessary.

BIOTREATMENT SYSTEM

Figure S-1 is a diagram illustrating the configuration of a PCAPP biotreatment ICB unit during planned normal operation. A total of 16 ICB units will be installed in four parallel modules with four units per module. The ICBs are expected to remove at least 95 percent of the influent TDG and 85 percent of the chemical oxygen demand. In the ICB process, biomass grows on a surface and forms a biofilm. The committee believes this immobilization of the biomass permits excellent retention and accumulation without the need for separate biomass recovery devices and biomass recycling. In comparison to a suspended growth process, advantages for this application include greater resiliency during fluctuating loading, faster recovery from off-normal conditions, and longer biomass residence time.

The committee makes the following major observations regarding the biotreatment system:

- *ICB start-up.* Start-up is the most critical phase in establishing stable operation of the ICBs. Satisfactory operation will hinge on the ability of the bacteria to adapt to and tolerate initially high and potentially inhibitory influent concentrations of TDG. The current plans are to start up the ICBs over a period of 30 days. PCAPP staff should consider a longer start-up period to avoid system failure and provide more time for the organisms to acclimate to the hydrolysate feed.
- *Toxicity concerns.* TDG can be inhibitory to the biotreatment system at high concentrations. Once at steady state, biodegradation and dilution of the

Copyright © National Academy of Sciences. All rights reserved.

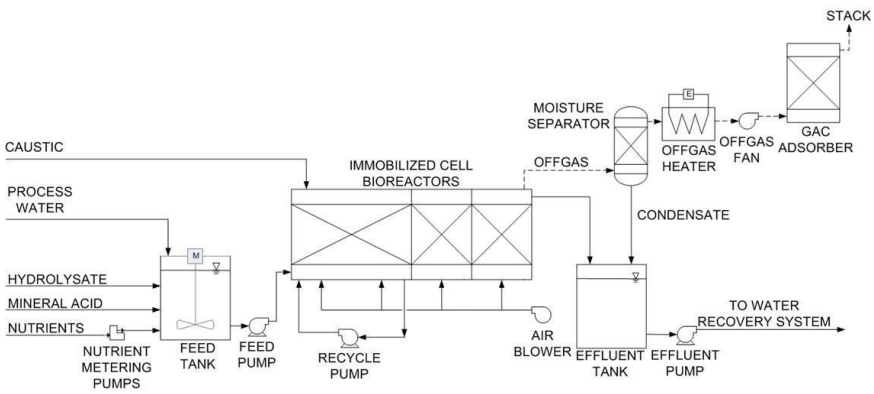

FIGURE S-1 Conceptual diagram for the 16 immobilized cell bioreactor (ICB) units during planned normal operation. SOURCE: Adapted from George Lecakes, Chief Scientist, PCAPP, "PCAPP's Water Recovery System and Brine Reduction System Briefing," presentation to the committee, May 1, 2012.

influent hydrolysate should maintain sub-inhibitory concentrations of TDG. During start-up or off-normal periods, however, TDG toxicity/inhibition may occur.

- *Solids buildup issues.* Solids may build up in the ICBs. Precipitation during treatment may produce iron-containing solids; furthermore, overaccumulation of biomass within the packing of the ICB units may occur. The buildup of either could hinder biotreatment efficiency. The solids will flow into the effluent tank and suspended solids may have an effect on the WRS-BRS system. Conducting ongoing solids balance calculations, collecting composite samples to characterize the effluent, possibly using a settling tank, avoiding excessive $FePO_4$ and diammonium phosphate use, and pre-operational testing with a benign and common substrate such as molasses, are possible ways for controlling solids.
- *Monitoring.* Extensive monitoring should be done, particularly during start-up, to ensure that the system is robust and that the operators have an accurate understanding of oxygen use, pH control, nutrient supply, TDG degradation, and the solids mass balance.
- *Downstream effects.* The precise composition and character of the effluent and off-gas are unknown. It is unclear to the committee how this might change with time and how this might affect downstream processing. The monitoring data for the composition and character of the effluent and off-gas during start-up should be closely examined to anticipate potential long-term concerns for downstream processing.
- *Oxygen demand issues.* Although the air supplied to the ICBs exceeds the overall stoichiometric oxygen demand, a shortage of oxygen supply may occur in the first chamber, which receives the full organic loading. In addition, the development of sulfidogenic conditions within the pores of the elastomer foam media used as packing could occur due to oxygen flux limitations. PCAPP should consider adding piping to feed the influent directly to the second and third chambers in addition to the first chamber. This would reduce the mass-loading rate to the first chamber and would decrease the potential for oxygen-limited conditions in the biofilm in the first chamber. The addition of nitrate as a supplemental electron acceptor would also mitigate sulfidogenesis.

WATER RECOVERY AND BRINE REDUCTION SYSTEMS

The WRS collects and mixes the ICB effluent and other wastewater streams and provides equalization before the combined stream of approximately 145,000 gpd is delivered to the BRS. Figure S-2 is a block diagram of PCAPP's BRS, which is the main system for water recovery at PCAPP. The BRS consists primarily of two unit operations. The liquid stream from the WRS flows to an evaporator where distillate water is produced, leaving a more concentrated brine. The BC from the evaporator is sent to the crystallizer, which concentrates the brine further and increases the amount of distillate. The distillate streams (water) from the evaporator and the crystallizer both pass through carbon filters for removal of any residual constituents that would prevent the water from meeting primary drinking water requirements. Monitoring of the granular activated carbon filters for the presence of these constituents is essential. The remaining slurry is passed to a belt filter press where the solids are concentrated and the filtrate is returned to the crystallizer. The filter cake is sent off-site to a hazardous waste disposal site. After passing through the carbon filters, the BRS effluent must be of sufficient quality to enable it to be recycled in the plant.

The committee makes the following major observations regarding the WRS-BRS:

- The modeled concentrations of organic compounds and suspended solids in the PCAPP crystallizer dis-

Copyright © National Academy of Sciences. All rights reserved.

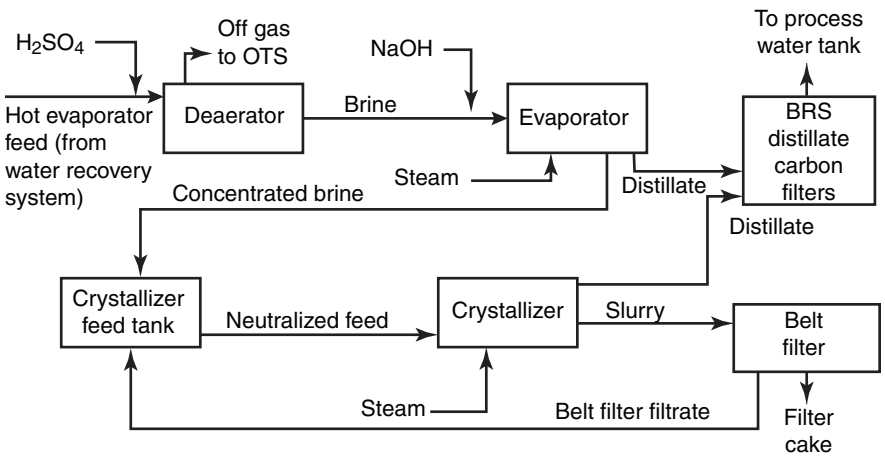

FIGURE S-2 Block diagram of the brine reduction system. NOTE: OTS, off-gas treatment system. SOURCE: Adapted from Veolia Water Solutions & Technologies, Bench Scale Evaporation of Waste Brine and Filter Testing, 2010. Used with permission.

tillate are uncertain and may not be achieved. If the concentrations of organic compounds of concern are higher than expected, the activated carbon will need to be replaced more frequently than planned. If the suspended solids concentration is too high, excessive backwashing of the carbon filter may be required. The concentrations of the organic compounds and suspended solids in the distillate from the PCAPP crystallizer should be carefully monitored. If they prove to be unacceptably high, consideration should be given to upgrading the de-entrainment device in the crystallizer.

- Much uncertainty remains whether the product water from the distillate activated carbon filters of the PCAPP BRS will meet permit requirements that conform to drinking water quality standards. There is insufficient detail available on the composition of the total organic carbon in the filter influent water to determine with confidence what the effluent quality will be. PCAPP operators should, therefore, monitor the carbon filter effluent for compounds of concern.
- Primary drinking water standards were developed based on the need to protect public health; water that is recycled for non-potable use should not have to meet stringent drinking water standards. PCAPP should renegotiate the permitting requirements to better reflect that the recycled water is intended for non-potable use within the plant.
- The brine reduction system for PCAPP will be a first-of-a-kind system because a similar feed has never been treated before. The PCAPP WRS-BRS process will require a high level of monitoring and operator intervention. Enlisting the assistance of the technology provider of the WRS-BRS during start-up and initial operation, as well as for operator training, can be helpful in this effort.

MATERIALS OF CONSTRUCTION

As part of its study, the committee reviewed the materials of construction (MOC) provided to them. The biotreatment, water recovery, and brine reduction systems include a large number of different items that are constructed from a wide spectrum of materials, including carbon steel, high-nickel alloys, fiber-reinforced plastic, epoxy-coated carbon steel and titanium, and austenitic and duplex stainless steels, with the latter two being used extensively.

The committee makes the following major observations regarding the MOC:

- The materials of construction selected for the PCAPP biotreatment and WRS-BRS process equipment appear to be generally appropriate for the service conditions anticipated, based on the information available to the committee.
- The combination of high chloride concentrations and elevated temperatures creates highly corrosive conditions, even when the pH is near 7.
- Heat transfer surfaces are vulnerable to corrosion, especially under deposits. Standard operating procedures should be implemented to ensure that appropriate surface cleaning is performed regularly for the PCAPP biotreatment system and the WRS-BRS.
- Properly designed and implemented protocols to monitor the occurrence of corrosion in components of the PCAPP biotreatment system and WRS-BRS enables the identification of problems before equipment failures occur, and such protocols should be

Copyright © National Academy of Sciences. All rights reserved.

designed and implemented. This provides a basis for selecting alternative materials if the original selections prove to be inadequate, or for modifying operating practices to minimize the corrosion risk.

- The proposed tank corrosion monitoring plan for PCAPP relies on ultrasonic inspection and external visual inspection. This approach would provide no warning of pitting attack prior to wall penetration. Internal visual inspection of the equipment when it is out of service between destruction campaigns would reduce the probability of such failures. A monitoring plan that includes both external and internal inspection for detecting general corrosion, pitting/crevice corrosion, and stress corrosion cracking is needed not only for tanks but for other equipment as well.
- No corrosion monitoring plan has been developed for equipment other than tanks. PCAPP should develop a corrosion monitoring plan for equipment other than tanks that includes, as a minimum, internal inspection and corrosion testing. This plan should include provisions for detecting general corrosion, pitting/crevice corrosion, and stress corrosion cracking.
- The Assembled Chemical Weapons Alternatives program leadership and PCAPP site contractor management should strongly support implementation of a comprehensive corrosion-monitoring program. This should be a priority.

Copyright © National Academy of Sciences. All rights reserved.

1

Background

Under the direction of the Department of Defense (DOD), the U.S. Army Element known as the Assembled Chemical Weapons Alternatives (ACWA) program will destroy the remaining U.S. stockpile of chemical weapons in storage at the Pueblo Chemical Depot (PCD) in Colorado and at the Blue Grass Army Depot in Kentucky.

The chemical agent stockpile at the PCD contains 105-mm and 155-mm artillery projectiles along with 4.2-inch mortar rounds. Together, these number approximately 780,000 munitions and contain a total of about 2,600 tons of mustard blister agent. All the projectiles and more than three-quarters of the mortar rounds contain distilled mustard agent (HD). The remaining mortars contain HT, which is a mixture of mustard agent and 20 to 40 wt. percent of T (bis[2-chloroethylthioethyl] ether), which was simultaneously produced during the synthesis process (NRC, 2001).

The facility constructed to destroy the chemical weapons stored at the PCD is called the Pueblo Chemical Agent Destruction Pilot Plant (PCAPP). Construction was essentially completed in late 2012. Its operational readiness to begin destroying agent is expected to be achieved by the first half of 2015, and it will continue in operation for 3 to 5 years. PCAPP will robotically disassemble the projectiles, remove the energetic materials, destroy the chemical agent by hydrolysis with hot (194°F) water, and decontaminate the mustard agent projectile casings by heating them to 1,000°F for more than 15 minutes. The Army refers to the hydrolysis step as neutralization. The product stream from this neutralization step is called hydrolysate, and it must be further treated to conform to requirements of the Chemical Warfare Convention treaty, to which the United States is a signatory. The major component in the product stream is thiodiglycol ($HOCH_2CH_2SCH_2CH_2OH$) (TDG), which is listed as a Schedule 2 compound in the Chemical Weapons Convention treaty because it is a precursor for the synthesis of mustard agent. The DOD and ACWA have selected biotreatment for this second treatment step.

BRIEF DESCRIPTION OF THE PCAPP PROCESS

A detailed description of the PCAPP process can be found in earlier National Research Council (NRC) reports, *Assessment of Agent Monitoring Strategies for the Blue Grass and Pueblo Chemical Agent Destruction Pilot Plants* (2012) and *Review of Secondary Waste Disposal for the Blue Grass and Pueblo Chemical Agent Destruction Pilot Plants* (2008). Figure 1-1 depicts a block diagram of all the main process steps for biotreatment and water recovery used at PCAPP that are the subject of this report. The process for munition disassembly and agent destruction includes the following steps:

1. Munitions are removed from their pallets.
2. Propellant is separated from the projectiles and sent off-site for disposal.
3. Bursters are removed at the linear projectile/mortar disassembly machine and also sent off-site.
4. Mustard agent is washed out of the projectile bodies by the munition washout system (MWS) with a high-pressure water stream.
5. Mustard agent and MWS wash water is sent to the agent hydrolysis reactors where the agent is hydrolyzed with hot water (194°F).
6. After the agent hydrolysis is completed and the hydrolysate has been determined to contain no more than 20 ppb HD or no more than 200 ppb HT, it is transferred and treated in immobilized cell bioreactors (ICBs) in the biotreatment area where the main product of the hydrolysis, TDG, will be degraded by microorganisms.
7. If a munition is leaking or contaminated with agent, the whole munition will be detonated by using explosive destruction technology (EDT).[1]

[1]In general, an EDT is a sealed chamber in which chemical munitions that are otherwise difficult to process are destroyed by detonation and/or deflagration. A variant EDT technology developed by the U.S. Army, the explosive destruction system uses shaped charges in a sealed chamber to

Copyright © National Academy of Sciences. All rights reserved.

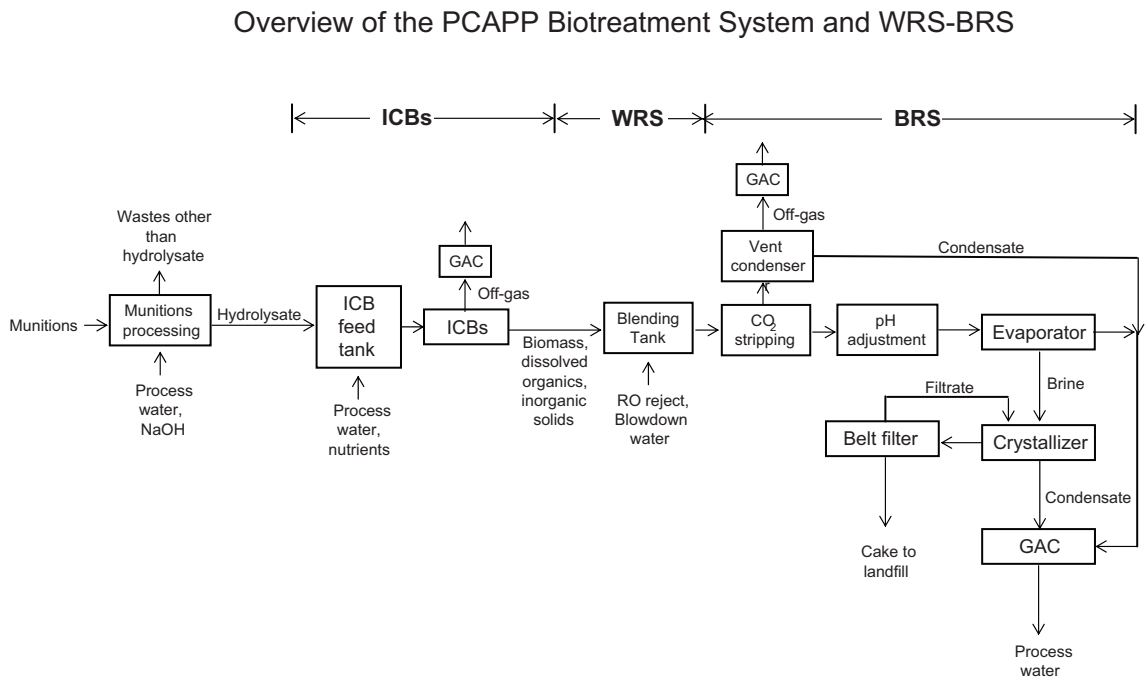

FIGURE 1-1 Overview block diagram of the PCAPP biotreatment, water recovery, and brine reduction systems. NOTE: BRS, brine reduction system; GAC, granular activated carbon; ICB, immobilized cell bioreactor; RO, reverse osmosis; WRS, water recovery system.

The ICBs are designed to remove at least 95 percent of the influent TDG. The TDG is mineralized to CO_2, sulfuric acid, and water, and a large quantity of biomass resulting from TDG degradation is produced. The biotreatment process is described and reviewed in detail in Chapter 2. Table 1-1 indicates the distribution of the water recycled from the water recovery and brine reduction systems (WRS-BRS). The liquid effluent from the ICBs is blended with boiler and cooling tower blowdown water and reject water from a reverse osmosis process that provides highly purified water for uses such as the feed for the high-pressure spray nozzles of the munitions washout system and the boilers. The ICBs also generate vapors possibly containing toxic volatile organic compounds (VOCs), which will be collected and routed to an off-gas treatment system containing granular activated carbon (GAC).

The WRS and BRS are described and reviewed in detail in Chapter 3. The WRS-BRS is designed to treat approximately 145,000 gallons per day (gpd). The WRS collects and mixes ICB effluent with other wastewater streams and provides equalization of the collected liquid streams before the combined stream is delivered to the BRS. The recovered water is transferred to process water storage tanks from which it is reused by the facility. The WRS-BRS is expected to be able to recycle 80 percent of the water used in PCAPP operations.

The BRS consists primarily of two unit operations. The liquid stream from the WRS flows to an evaporator where distillate water is produced, leaving a more concentrated brine. The brine concentrate (BC) from the evaporator is sent to the crystallizer, which concentrates the brine further and

TABLE 1-1 Summer and Winter Quantities and Percentages for the Units Using the Recycled Water at PCAPP

Process Water Use	Flow rate (gpd)	Percentage of total (%)
Summer		
Biotreatment system	116,000	79.7
Reverse osmosis system	14,300	9.7
Off-gas treatment scrubbers	2,000	1.4
Agent hydrolyzers	830	0.57
BRS and miscellaneous	1,600	1.11
Cooling tower basin	11,000	7.5
TOTAL	145,000	
Winter		
Biotreatment system	115,000	79.6
Reverse osmosis system	24,800	17.2
Off-gas treatment scrubbers	2,000	1.4
Agent hydrolyzers	830	0.58
BRS and miscellaneous	1,600	1.12
TOTAL	144,000	

NOTE: BRS, brine reduction system.
SOURCE: Adapted from Calculation 24851-RD-M5C-B17-M0001, Basic Utilities Water Balance for PCAPP, Appendix A (Summer) and Appendix B (Winter).

open the munition and then the agent is neutralized with an appropriate solvent reagent.

Copyright © National Academy of Sciences. All rights reserved.

Review of Biotreatment, Water Recovery, and Brine Reduction Systems for the Pueblo Chemical Agent Destruction Pilot Plant

produces more distillate water. The distillate stream (water) from the evaporator and the crystallizer both pass through carbon filters for removal of any residual constituents that would prevent the water from meeting permit requirements. The remaining slurry is passed to a belt filter press where the solids are concentrated and the filtrate is returned to the crystallizer. The filter cake is sent off-site to a hazardous waste disposal site. After passing through the carbon filters, the BRS effluent must be of sufficient quality to enable it to be recycled in the plant.

STATEMENT OF TASK

Because the PCAPP WRS-BRS is technology that has not been used at chemical munitions destruction facilities before, the Program Executive Officer for ACWA (PEO-ACWA) requested the NRC initiate a study to review the PCAPP water recovery system and the brine reductions system that are already installed. After the originally constituted committee had already met three times, in October 2012, PMACWA requested that the statement of task be expanded to include a review of the biotreatment area. The expanded statement of task for what became the Committee on Review of Biotreatment, Water Recovery, and Brine Reduction Systems for the Pueblo Chemical Agent Destruction Pilot Plant is given below:

> The National Research Council will establish an ad hoc committee to:
>
> *Original Tasks:*
>
> - Obtain information from the equipment vendor on BRS installations that treat comparatively similar biotreatment effluents, and determine that operability of these systems has been acceptable.
> - Review materials of construction for the WRS and BRS to judge whether or not performance can be expected to be adequate over the anticipated operational life of the plant.
> - Ascertain the likelihood that the quality of the recycled water will meet requirements for its use as plant process water at PCAPP.
> - Address the possibility of fouling of the WRS and BRS equipment due to migration of microorganisms from the bioreactors.
>
> *New Tasks:*
>
> - Review the results of mustard agent-only hydrolysate biotreatment studies carried out prior to 1999, including the ICB-based bench-scale study reported in ERDEC-TR-497 and prior SBR-based bench-scale studies. Also, reexamine the results from the 1999-2004 mixed agent and energetics testing in light of current plans to biotreat mustard agent-only hydrolysate.
> - Review the current design, systemization approach, and planned operating conditions for the biotreatment process as well as the water recovery and brine reduction systems (WRS and BRS), and recommend activities that should be performed as part of systemization at the Pueblo Chemical Agent Destruction Pilot Plant (PCAPP) to provide additional confidence in the operational readiness of the plant.

SCOPE

As noted earlier, the committee recognizes that PCAPP has been designed and that construction is completed. While this facility is identified as a pilot plant, it is intended to function as the vehicle for destruction of the entire stockpile at PCD. The current approach to biotreatment, water recovery, and brine reduction has not had the benefit of a more traditional smaller-scale pilot evaluation. The committee limited its concerns, findings, and recommendations to address problems that might occur during systemization (pre-operational testing) and operations and offers suggestions regarding how PCAPP might respond to these problems.

The committee visited the PCAPP site during its first meeting in May 2012. Upon examining the WRS-BRS installation that was nearing completion, the committee decided there was no benefit to be gained in visiting another installation using this technology, because the feed stream at PCAPP is unique and feeds of similar composition have never been treated before. However, the committee did hold a teleconference and discussion with Veolia Water Solutions & Technologies, the technology provider of the BRS.

The stipulations pertaining to the rules under the Federal Advisory Committee Act by which the NRC performs studies (other than those involving classified materials) require that all reference materials used to support study reports must be made available to the public by a Freedom of Information Act request. Consequently, the committee was limited in the information that it could use, because the BRS system technology provider, Veolia Water Solutions & Technologies, considered the design of its process equipment to be proprietary. Moreover, the technology provider's reports on testing of surrogate feeds that led to the BRS design were also labeled proprietary and were not available to the committee.[2] Thus, the committee depended on receiving responses to its questions from the PCAPP contractor and the BRS technology provider. Such responses include, for example, the information on materials of construction given in Table 4-1.

After the statement of task was extended, six members of the committee, including four newly appointed members, visited the PCAPP site in November 2012. The revised statement of task requested the committee to review various former studies conducted between 1994 and 2006 on

[2]Permission was granted by Veolia Water Solutions & Technologies to use two figures from one of the company's reports as the basis for two of the figures in Chapter 3.

Copyright © National Academy of Sciences. All rights reserved.

biotreatment processing of mustard hydrolysate. Many of these studies used both agent and energetics hydrolysate as feed to the bioreactors. Also, the scale and nature of the tests varied from 1-liter sequencing batch reactor (SBR) bench-scale studies to 1,000-gallon pilot ICB bioreactors. To meet the statement of task, these studies were reviewed by the members of the committee and those deemed relevant have been cited in Chapter 2 when appropriate. The committee does not present specific reviews of any of these studies but has considered the results in its review and analysis of the PCAPP biotreatment process.

ORGANIZATION OF THIS REPORT

This chapter provides brief background information on the PCAPP plant design, the statement of task for this study, introductory descriptions of the biotreatment, water recovery, and brine reduction systems processes, and the scope of the committee's review. Chapter 2 describes prior testing and reviews the design of the biotreatment ICB processes, as requested in the expanded statement of task. Chapter 3 describes and reviews in detail the WRS-BRS system design. As mentioned above, the descriptions are based on the drawings and presentations given to the committee at its first meeting and the responses to question sets that were given to the PCAPP contractor and its BRS technology provider. Chapter 4 reviews the materials of construction being used, taking into consideration the expected 3- to 5-year usage of the plant.

REFERENCES

NRC (National Research Council). 2001. Analysis of Engineering Design Studies for Demilitarization of Assembled Chemical Weapons at Pueblo Chemical Depot. Washington, D.C.: The National Academies Press.

NRC. 2008. Review of Secondary Waste Disposal for the Blue Grass and Pueblo Chemical Agent Destruction Pilot Plants. Washington, D.C.: The National Academies Press.

NRC. 2012. Assessment of Agent Monitoring Strategies for the Blue Grass and Pueblo Chemical Agent Destructions Pilot Plants. Washington, D.C.: The National Academies Press.

Copyright © National Academy of Sciences. All rights reserved.

2

The PCAPP Biotreatment System

GENERAL DESCRIPTION OF THE BIOREACTOR SYSTEM

Immobilized cell bioreactors (ICBs) will be used to biodegrade the thiodiglycol (TDG) and other organic compounds produced by the hydrolysis of the mustard agent (HD or HT) in the munitions currently stored at Pueblo Chemical Depot. Honeywell International, Inc., is the technology provider for the Pueblo Chemical Agent Destruction Pilot Plant (PCAPP) ICB biotreatment system, which includes equipment for processing the feed, off-gas, and effluent from the bioreactors as well as recycling pumps and storage for the feed and effluent, as shown in Figure 2-1.

The ICBs at PCAPP are aerobic attached-growth bioreactors in which bacteria grow and are immobilized on a support medium made of plastic and an elastomer foam. The overall bioreactor system consists of 4 parallel modules, each of which contains 4 parallel units, for a total of 16 parallel units. Figure 2-2 shows two of the four modules; Figure 2-3 identifies major components of a module. The principal target compound for treatment in the ICBs is the Schedule 2 compound TDG. Each ICB unit is expected to handle 485 lb TDG/day (57.9 lb TDG/1,000 gal diluted hydrolysate/day) and achieve TDG removal efficiencies greater than or equal to either 95 percent at the maximum design flow rate or 98 percent at 50 to 90 percent of the maximum design flow rate.[1]

The pH of the incoming hydrolysate feed is expected to fall between 10 and 13, so the process design includes the ability to add acid to the feed tank to provide neutralization if the high pH proves inhibitory to the biomass. TDG is expected to be metabolized in the ICBs, mainly to CO_2 and sulfuric acid (H_2SO_4), by aerobic bacteria, resulting in biomass growth (sludge production) of about 150-200 lb/day per unit.[2] The generated sulfuric acid (0.8 g-H_2SO_4/g-TDG mineralized) can lower the pH in the bioreactor and inhibit the bacteria. Therefore, caustic addition (NaOH) may be required, especially during start-up, to maintain the pH between 7 to 8 in the bioreactor. During normal operations with an acclimated biomass, both the acid addition to the feed tank and caustic addition to the ICB units may not be needed. The inorganic nutrients urea and diammonium phosphate (DAP) are also added to meet the stoichiometric nitrogen and phosphorus requirements for biodegradation.

As mentioned above, a total of 16 ICB units will be installed in 4 parallel modules with 4 units per module. Each unit, holding approximately 42,000 gal, contains three chambers in series (21,000 gal, 10,500 gal, and 10,500 gal). Most of the degradation and biomass growth is expected to occur in the first chamber, which hydraulically operates similarly to a continuous-flow stirred tank reactor (CSTR) from the high internal recycle flow rate and aeration. The remaining two sequential chambers also operate in the mode of CSTRs. They provide additional contact time to improve effluent quality and biotreatment capacity and to mitigate against potential overload or temporary upsets. The ICBs are expected to remove at least 95 percent of the influent TDG and 85 percent of the chemical oxygen demand (COD), and each unit is designed for a maximum flow rate of diluted hydrolysate of 9,700 gpd (BPT, 2006a). The flow rate to each ICB unit is expected to vary between approximately 4,800 and 9,700 gpd. At these flow rates, the average hydraulic retention time in each unit is approximately 8.6 to 4.3 days, respectively, to allow sufficient contact time with bacteria.

The ICB feed requires dilution (normally 1 part hydrolysate to 7 parts process water) to achieve desired, sub-inhibitory influent concentrations of TDG. Even when diluted, the hydrolysate has a relatively high concentration of (1) TDG (about 7,000 mg/L, or 2,730 mg/L as TOC), (2) other organics (estimated at 570 mg/L as TOC in addition to the TDG), and (3) reduced inorganic compounds. The combination of all three categories of compounds exerts a significant oxygen demand (15,000 mg/L as COD) (BPT,

[1]George Lecakes, Chief Scientist, PCAPP, "PCAPP's Water Recovery System and Brine Reduction System Briefing," presentation to the committee, May 1, 2012.

[2]Ibid.

Copyright © National Academy of Sciences. All rights reserved.

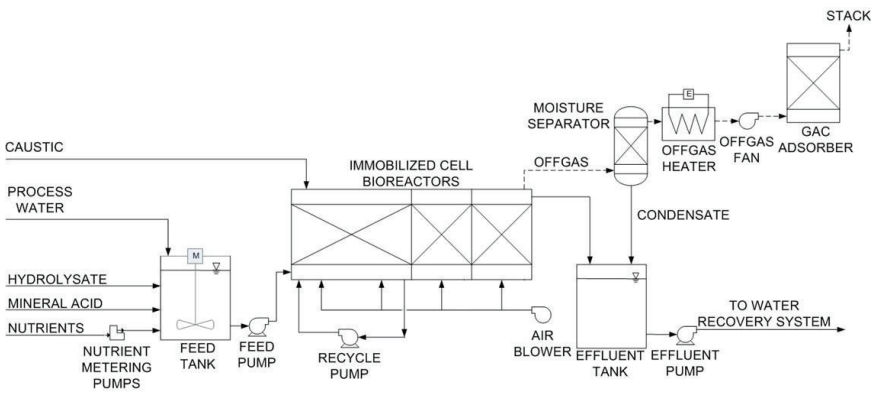

FIGURE 2-1 Conceptual diagram for the 16 immobilized cell bioreactor (ICB) units during planned normal operation. NOTE: GAC, granular activated carbon. SOURCE: Adapted from George Lecakes, Chief Scientist, PCAPP, "PCAPP's Water Recovery System and Brine Reduction System Briefing," presentation to the committee, May 1, 2012.

FIGURE 2-2 Two of the four biotreatment modules at PCAPP, each of which has four immobilized cell bioreactor units. SOURCE: Paul Usinowicz, Water/Wastewater Research Leader, Battelle, "Design and Operating Conditions for PCAPP's Biotreatment Process," presentation to the committee, November 28, 2012.

2006a). Plans are for this oxygen demand to be met by aeration from coarse-bubble air diffusers (powered by blowers) at the bottom of the reactors.

The system includes local programmable logic controllers that are data-linked to the facility control system for remote monitoring and status and alarm indication. The alarms are set to alert if various parameters, such as pressure, pH, dissolved oxygen, and temperature, fall outside normal ranges or if the blower air stops flowing to the bioreactors. The system was designed according to applicable standards.[3]

[3]Among the standards involved are those from the following organizations: The American National Standards Institute/ Instrumentation, Systems, and Automation Society; the American Petroleum Institute; the Air Conditioning and Refrigeration Institute; the American Society of Mechanical Engineers; the American Society for Testing Materials; the American Welding Society; the Hydraulic Institute; the National Electrical Manufacturers

Copyright © National Academy of Sciences. All rights reserved.

Review of Biotreatment, Water Recovery, and Brine Reduction Systems for the Pueblo Chemical Agent Destruction Pilot Plant

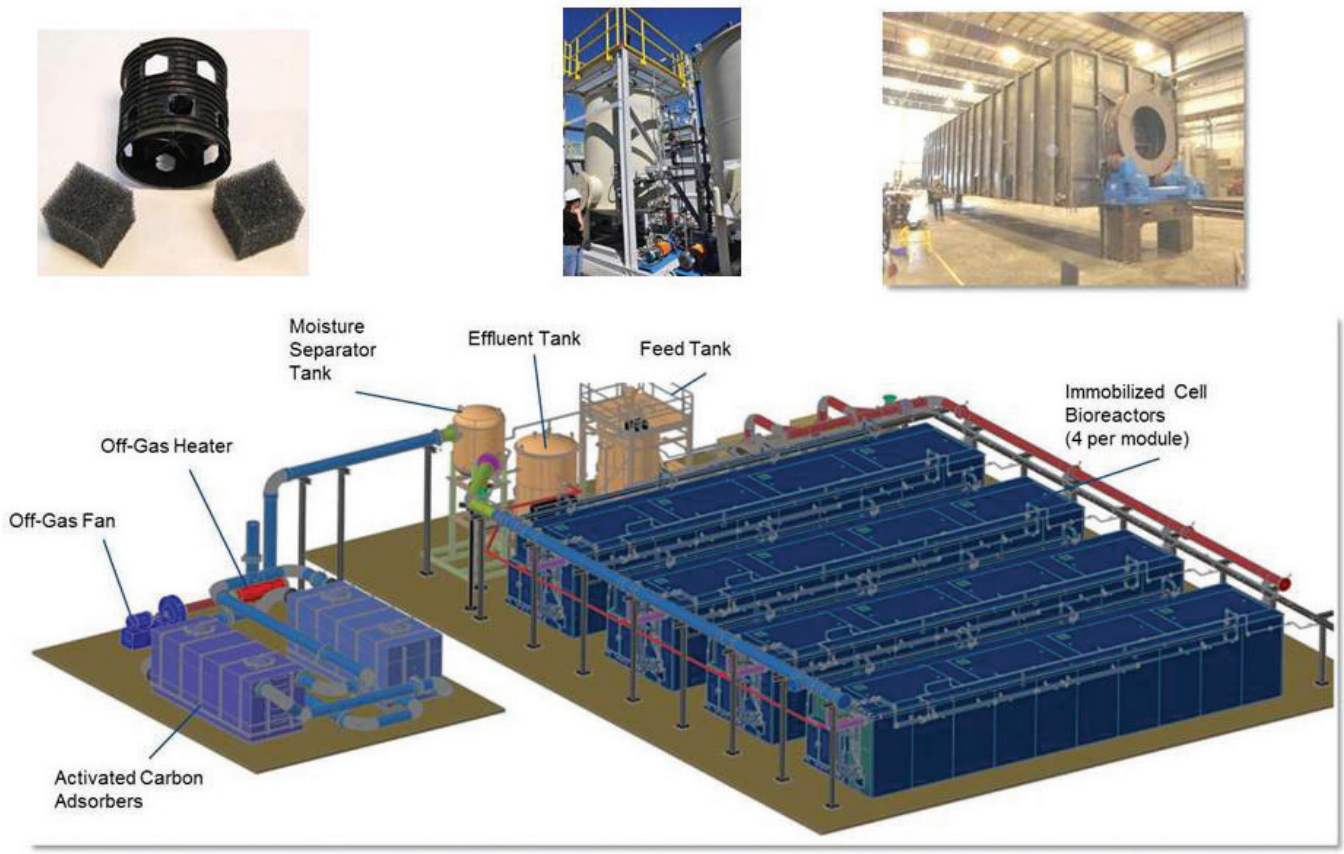

FIGURE 2-3 Major components of one of four biotreatment modules at PCAPP. SOURCE: Paul Usinowicz, Water/Wastewater Research Leader, Battelle, "Design and Operating Conditions for PCAPP's Biotreatment Process," presentation to the committee, November 28, 2012.

The effluent from the ICB will be sent directly to the water recovery and brine reduction system (WRS-BRS), which is expected to recover and recycle 80 percent of the ICB effluent and other streams as process water. The bioreactors will also potentially generate vapors containing toxic volatile organic compounds (VOCs), which will be collected and routed to an off-gas treatment system containing a granular activated carbon (GAC) adsorber (see Figure 2-1).

COMMITTEE'S REVIEW OF THE SYSTEM

The committee's understanding of the principal operating and hydrolysate characteristics pertinent to the ICB units is given in Table 2-1. These values are used in the calculations presented in this chapter. All calculations are based on a single ICB unit unless stated otherwise.

Operation of the ICBs relies on biomass that grows on a solid layer or support medium and forms a biofilm. This immobilization permits excellent retention and accumulation of the biomass without the need for separate biomass recovery devices and biomass recycle (Rittmann and McCarty, 2001; Metcalf & Eddy, Inc., et al., 2003). A relatively high concentration of active biomass can be maintained within the ICB for longer solids retention times in comparison to suspended-growth biotreatment processes. The longer solids retention times also facilitate greater biomass decay with resulting lower amounts of sludge production. The immobilized biomass provides greater resistance to toxic shocks and fluctuations in organic loading than suspended growth processes such as sequencing batch reactors (SBRs). One final noteworthy advantage of the ICB system that has been designed for use at PCAPP is the oxygen supply system that utilizes a duckbill coarse bubble diffuser and is therefore unlikely to clog.

In early studies in the mid- to late 1990s, some testing had been performed using SBRs instead of ICBs. Some of these studies will be discussed later in this chapter. These studies were performed to address the planned use of biotreatment to process the mustard agent hydrolysate produced from the bulk stocks of agent stored at the Aberdeen, Maryland, site. The Aberdeen Chemical Agent Disposal Facility (ABCDF)

Association; the National Fire Protection Association; and the Tubular Exchanger Manufacturers Association (BPT, 2006a).

Copyright © National Academy of Sciences. All rights reserved.

TABLE 2-1 Key Operating and Feed Characteristics for the Immobilized Cell Bioreactor Units

Characteristic	Hydrolysate (total)[a]	Process Water (total)[a]	ICB Influent (total)[a]	ICB Influent (per unit)
Flow (gpd)	16,766	117,362	134,128	8,383
Hydraulic retention time (days)				4.98[b]
Volume (gal)				41,783
Concentration of TDG (mg/L)	56,000	0	7,000	7,000
Concentration of TSS (mg/L)	8,000	0	1,000	1,000
Concentration of COD (mg/L)	120,000	0	15,000	15,000
Concentration of TOC (mg/L)	26,400	0	3,300	3,300
Concentration of iron (mg/L)	2,160	0	270	270
Concentration of NaCl (mg/L)	57,600	0	7,200	7,200
pH	10-13			7-8[c]

[a] This is the total to all 16 units.
[b] This was calculated from the flow and volume shown.
[c] This will be maintained via acid production within the unit and caustic or acid addition as needed.
SOURCE: Paul Usinowicz, Water/Wastewater Research Leader, Battelle, "Design and Operating Conditions for PCAPP's Biotreatment Process," presentation to the committee, November 28, 2012; personal communication from Paul Usinowicz to the committee, November 29, 2012; and BPT (2006a).

did subsequently process the HD mustard agent into hydrolysate. This hydrolysate, however, was ultimately shipped for processing at Dupont's million-gallon biotreatment Secure Environmental Treatment facility in Deepwater, New Jersey, rather than treated biologically onsite at the ABCDF. Onsite treatment is being required by the State of Colorado for the hydrolysate that will be produced at PCAPP. As part of the ACWA program planning for PCAPP, studies conducted beginning in the early 2000s switched from the use of SBRs to ICBs. Initially, it was planned that the agent hydrolysate would be mixed with energetics hydrolysate produced from the tetrytol and M8 propellant associated with the projectiles and mortars stored at Pueblo Chemical Depot. Following cost-cutting initiatives and regulatory and public acceptance, the energetic materials will now be shipped off-site for processing, and only the agent will be hydrolyzed and subsequently biodegraded at PCAPP.

Finding 2-1. The committee supports the selection of a biofilm process for the biotreatment system at PCAPP. In comparison to a suspended-growth process, ICBs have greater resiliency during fluctuating loading, faster recovery from off-normal conditions (e.g., toxic inhibition and excursions in pH and temperature), and longer biomass residence time.

Complexity of the Influent Stream and Related Toxicity/Inhibition

Toxicity Impacts on Biodegradation

Satisfactory operation of the ICBs at PCAPP will hinge on the ability of the bacteria to adapt to and tolerate initially high, and potentially inhibitory, influent concentrations of TDG. SBR laboratory studies demonstrated that TDG was inhibitory at concentrations greater than 2,000 mg/L (or approximately 2,000 ppm).[4] These studies also indicated that hydrolyzed heel material could be inhibitory.[5] Based on these studies, recommendations had been that operators should "maintain cell operations so that TDG concentrations in all cells are maintained at less than 2,000 ppm TDG during operations"(BPT, 2005).

Once at steady state, biodegradation and dilution of the influent hydrolysate should maintain concentrations of TDG below 700 mg/L in the first chamber of each unit (the design influent TDG concentration in the hydrolysate is 7,000 mg/L; see Table 2-1). Therefore, under normal operating conditions, the TDG concentration in the units will not exceed 2,000 mg/L. During periods of off-normal operation and start-up, however, care should be taken to operate below the recommended maximum TDG concentration (i.e., 2,000 mg/L). Indeed, the PCAPP design influent TDG concentration compares favorably to TDG concentrations used in SBR experiments of approximately 8,500 mg/L, 12,700 mg/L, and 13,750 mg/L in which no apparent toxicity or inhibition of the biomass was observed (Harvey et al., 1997; SBR Technologies, Inc., 1996; Harvey et al., 1996).

[4]James P. Earley, Principal Engineer and PCAPP Task Manager, SAIC, "Review of Biotreatment Testing for the Pueblo Chemical Agent Destruction Pilot Plant (PCAPP) Project," presentation to the Committee on Chemical Demilitarization, September 15, 2011, National Research Council, Washington, D.C.

[5]Ibid. Also, "heel material" refers to mustard agent that over time in storage has degraded to a semi-solid or solid material in the agent cavities of munitions. This material generally is removed from the munitions by high pressure water jets. Sulfonium ion species comprise a large percentage of this material.

Copyright © National Academy of Sciences. All rights reserved.

With respect to toxicity testing, an SBR study observed toxicity at loadings of 0.2 g TOC/g of mixed-liquor suspended solids (MLSS)/day (SBR Technologies, Inc., 1996). The committee compared this value to the expected ICB design loading at the PCAPP site using the equation below. The organic mass in units of "g TOC" (SBR Technologies, Inc., 1996) were converted to "g TDG" using two methods: (1) the theoretical TOC:TDG ratio of 0.39 and (2) averaging the TOC:TDG ratios provided in the report[6] to generate a TOC:TDG ratio of 0.45. After conversion, the threshold for inhibition or toxicity was calculated to be 0.44 to 0.51 g TDG/g MLSS/day.

To determine how the expected design loading (EDL) for the ICBs at PCAPP compares to the range at which toxicity or inhibition might be expected, the committee performed the following calculation:

$$\text{EDL} = \frac{(\text{g TDG/L}) \times (\text{gal influent/day}) \times (\text{L/gal}) \times (0.7\ \text{g VSS/g TSS})}{(\text{g TDG degraded/L}) \times (Y_{obs}) \times (\text{gal influent/day}) \times (\text{L/gal}) \times (\text{average SRT})}$$

where:

- VSS is volatile suspended solids and represents the suspended organic matter;
- TSS is total suspended solids and includes both organic and inorganic matter that is suspended;
- The unit flow and TDG concentration given in Table 2-1 was assumed;
- A 50-day solids retention time (SRT) was assumed in the ICBs;
- An observed biomass growth yield (Y_{obs}) of 0.036 g VSS/g TDG was used[7]; and
- 90 percent of the influent TDG was assumed to be biodegraded.

This yielded an expected design loading in the PCAPP ICBs of 0.43 g TDG/g TSS/day. As discussed earlier, this is slightly below the range of values expected to be toxic/inhibitory (0.44 to 0.51 g TDG/g MLSS/day) from a previous study (SBR Technologies, Inc., 1996). Again, with the expected dilution in the units operated as CSTRs, this may not be a problem, but during off-normal or start-up periods, the biomass in the ICBs may be inhibited or killed by the influent TDG.

An additional toxicity issue of concern is the presence of uncharacterized compounds in the hydrolysate feed that may buildup in the recycled process water. At hydraulic residence times in the range of 4.3 to 8.6 days, COD degradation intermediates may also build up in the recycled water and become inhibitory if they are not removed in the WRS-BRS system (via activated carbon or the evaporator/crystallizer). Indeed, of the incoming TOC, only approximately 83 percent is TDG (Table 2-1)[8]; not all of the remaining TOC in the influent is characterized.

If urea and DAP are added as nutrients, as currently planned, nitrification (the microbial oxidation of ammonia to nitrate) may occur in the second and third chambers where the biodegradable organic concentration may be sufficiently low. Because nitrifiers are more susceptible to inhibition by toxicants than heterotrophs (the organic carbon-degrading organisms expected to dominate in the ICBs), an interruption in nitrification may provide an early warning sign for the presence of toxic compounds. Nitrification was reported during several phases of pilot-scale operation in a 75-gal SBR (SBR Technologies, Inc., 1998). By monitoring ammonium, nitrite, and nitrate leaving the ICB units, PCAPP staff may be able to respond more quickly to toxicity.

Inhibition by Heavy Metals

Table 2-2 shows the characterization of HD mustard agent hydrolysate used in ACWA biodegradation testing in 2003 (Guelta and Fazekas-Carey, 2003). The hydrolysate produced came from the hydrolysis of drained liquid agent and the solid heel material in 4.2-inch HD mortar rounds stored at Pueblo Chemical Depot. Consequently, the heavy metals concentrations given in Table 2-2 can be considered representative[9] of what will be encountered when PCAPP begins processing. Bacteriostatic effects exerted by high TDG concentrations could be exacerbated by the presence of some heavy metals with antimicrobial properties (e.g., Ag and Cu). Whereas such metals can be inhibitory and even bacteriocidal in the low milligrams/liter concentration range, there are several factors that would mitigate their toxicity to bacteria. First, sorption to precipitated iron is a likely fate for many of the heavy metals. The presence of salt (NaCl) at high concentrations (e.g., 7,200 mg/L NaCl in the diluted influent; see Table 2-1) would promote coagulation of iron precipitates and sorbed metals, thus removing the metals from solution and thereby reducing their bioavailability and toxicity. Common ligands, such as chloride, phosphate, sulfide, and organic matter, may also associate with bacteriocidal metals (e.g., Ag) to form dissolved complexes that have lower toxicity than the free metal ions (Xiu et al., 2011).

[6]See SBR Technologies, Inc. (1996), pp. 11, 27, and 28.

[7]James P. Earley, Principal Engineer and PCAPP Task Manager, SAIC, "PCAPP Biotreatment System Update," presentation to the Committee on Chemical Demilitarization, September 15, 2011, National Research Council, Washington, D.C.

[8]One gram of TDG is equivalent to 0.39 g TOC.

[9]Variations in heavy metal concentrations may result from differences in lots during manufacture, long-term storage conditions, degree of agent degradation, and interactions with metal surfaces in the agent storage cavity of munitions. Since no comprehensive sampling of heavy metals constituents for all of the approximately 780,000 munitions stored at Pueblo Chemical Depot has been done, the committee had to rely on the information available from prior test samples. The values given in Table 2-2 were the most complete analysis seen over the course of the committee's research in terms of heavy metals composition.

Copyright © National Academy of Sciences. All rights reserved.

TABLE 2-2 HD Hydrolysate Characterization from 2003 Biotreatment Testing

Constituent	Concentration (mg/L) (unless otherwise indicated)
Thiodiglycol (TDG)	17,537
Dithane	2,093
Thiox	47.9
Chemical oxygen demand COD)	43,100
Total organic carbon (TOC)	8,120
Percent TOC as TDG	84.9%
COD:TOC ratio	5.31 (ratio)
Sulfate	84
Sulfur	6,010
Total dissolved solids (TSS)	28,000
Total suspended solids (TSS)	1,000
pH	13 (pH)
Specific gravity	1.03 g/mL
Aluminum	1.99
Arsenic	0.579
Barium	0.033
Cadmium	3.2
Calcium	10.9
Chloride	10,800
Copper	0.281
Iron	520
Lead	3.69
Magnesium	5.74
Mercury	0.013
Molybdenum	0.065
Nickel	0.330
Phosphorus	0.456
Potassium	15.2
Silver	5.73
Sodium	10,630
Zinc	3.59

SOURCE: Guelta and Fazekas-Carey (2003).

Furthermore, some dissolved metal removal by biosorption is likely to occur.

Inhibition by Sulfide

Another inhibitory inorganic species is sulfide (likely present as H_2S and HS^-), which can be toxic to bacteria at concentrations at or above 100 mg/L. Unlike the heavy metals that are present in the influent to the ICBs, sulfide could be produced in the bioreactor by the reduction of sulfate if anaerobic zones within the biofilm develop. Up to 0.79 g of sulfate can be produced from the biological oxidation of 1 g of TDG, and with 98 percent removal of 7,000 mg/L of TDG in the influent, up to 5,400 mg/L sulfate would form. Given the high oxygen demand exerted by the hydrolysate, anaerobic micro-niches may develop within the biofilms where sulfate would be reduced to sulfide (referred to as sulfidogenic conditions). Indeed, the potential formation of sulfide is acknowledged in the reports reviewed by the committee (BPT, 2006a). Dissolved oxygen in the bulk liquid would rapidly oxidize any sulfide formed and released from the biofilm back to sulfate in the bioreactor fluid; therefore, it will be difficult to determine if sulfide toxicity is occurring, because it would occur within the biofilm itself.

One option for mitigating potential sulfidogenic conditions in the biofilm is to add nitrate as a supplemental electron acceptor. If there is insufficient dissolved oxygen to keep the biofilm entirely aerobic, nitrate can readily diffuse into the biofilm and, as a preferential electron acceptor over sulfate, prevent the development of sulfidogenic conditions. For this operational strategy, the ammonium and/or urea in the nutrient supply should be replaced with an adequate quantity of a nitrate salt to provide nitrogen both for biomass synthesis and as a favorable electron acceptor. No information was found in the literature on the biodegradability of TDG under nitrate-reducing conditions, although it seems likely; other glycols (ethylene and propylene) readily undergo mineralization under nitrate-reducing conditions (Klotzbücher et al., 2007).

Finding 2-2. Toxicity of TDG is unlikely to cause system upset during normal ICB operations at PCAPP. Under periods of off-normal operation and start-up, however, TDG could be inhibitory or toxic to the biomass in the ICBs.

Finding 2-3. Uncharacterized components in the wastewater feed to the ICBs at PCAPP could be inhibitory, and these compounds may build up over time if not removed in the water recovery and brine reduction systems as the water is recycled.

Finding 2-4. Although there are heavy metals present in the feed to the ICBs, the committee believes that heavy metals toxicity will not be a major concern for the biotreatment process at PCAPP. However, among factors that could be explored regarding poor ICB performance, especially during off-normal conditions, would be heavy metals toxicity.

Finding 2-5. Sulfide formation can be minimized by ensuring sufficient aeration and dissolved oxygen penetration throughout the biofilm. This can hinder the development of anaerobic niches.

Finding 2-6. Inclusion of nitrate as a supplemental electron acceptor in the feed to the PCAPP ICBs likely will mitigate the development of sulfidogenic conditions in areas of the biofilm that are deficient in oxygen.

Recommendation 2-1. Care should be taken at PCAPP during ICB start-up and off-normal periods to avoid toxicity/inhibition by reducing mass hydrolysate loading (e.g., increasing the hydraulic retention time or further diluting the hydrolysate) or operating in batch mode by discontinuing the feed until the ICB unit has recovered.

Copyright © National Academy of Sciences. All rights reserved.

Recommendation 2-2. Potentially inhibitory organic compounds in the process water recycle should be monitored at PCAPP. Operators should be aware that if such products buildup in the WRS-BRS system, toxicity/inhibition of the biomass in the ICBs may result.

Recommendation 2-3. If TDG removal or oxygen consumption begins to decline, the concentration of metals should be analyzed in the influent to the ICBs at PCAPP and within the ICBs themselves to determine if the metals might be contributing to inhibition.

- Oxygen consumption should be monitored by measuring oxygen in the off-gas as the ICBs are sealed and the off-gas will be sent through granular activated carbon.
- If dissolved metals reach inhibitory concentrations, measures to remove them from the influent (e.g., precipitation through pH adjustment and addition of coagulants in the holding tanks immediately upstream of the ICBs) should be considered.

Recommendation 2-4. With the planned use of urea and diammonium phosphate to supply nutrients, nitrification activity should be monitored at PCAPP based on ammonia, nitrite, and nitrate levels in the ICB influent and effluent. Inhibition of nitrification could alert operators to the presence of increasing concentrations of toxic compounds.

Recommendation 2-5. Careful attention should be given to control sulfide formation.

This may be accomplished by maintaining aerobic conditions within the biofilm or by adding nitrate to the feed to the PCAPP ICBs.

pH Impacts on Biodegradation

Control of pH will be critical to the successful operation of the ICB units. The generation of sulfuric acid during the biodegradation of TDG makes this especially challenging. The target range for proper operation is pH = 7 to 8.[10] During pilot testing with the 1,000-gallon ACWA unit, a significant decrease in performance (i.e., less than 90 percent removal of TDG) occurred from insufficient pH control and unseasonably low temperatures (Guelta et al., 2002). During this period, the pH was 5.0 to 6.5, indicating the need for pH neutralization. Nevertheless, the interactive impact of low pH and low temperatures (55°F and 65°F) was not evaluated in these studies (Guelta et al., 2002); it is possible that at warmer temperatures that enhance microbial growth, pH values outside of the 7 to 8 range may be better tolerated.

In bench-scale tests with ICBs designed and operated to simulate the full-scale units, the Bechtel Pueblo Team (2005) found that pH levels above 10 led to significant foaming, and performance was hampered for a longer period. Recovery of the ICB units was possible after 1 to 2 days following short-term (i.e., 1- to 2-hour) excursions in pH above 10. The Bechtel Pueblo Team recommended that influent pH should be lowered below 10 prior to the first ICB cell to prevent unacceptably high pH conditions from occurring.

The milligrams of oxygen consumed per gram of MLSS per hour was measured with MLSS from an SBR operated with HT hydrolysate over a pH range of 6.5 to 9.0 (Harvey et al., 1997). This test, called the specific oxygen uptake rate (SOUR), is an indicator of the activity of the biomass and oxygen demand rates. Over several tests, the SOUR increased when the pH increased from 6.5 to 7, but it decreased above pH 8. These results are consistent with the intent of operating the ICB units at pH 7 to 8.

Caustic is a low-cost and convenient method for delivering alkalinity. However, sodium bicarbonate gave more precise pH control than caustic in a laboratory-scale ICB study (Guelta and DeFrank, 1998).

Finding 2-7. To optimize TDG removal, pH control in the range of 7 to 8 is essential for the PCAPP ICBs.

Recommendation 2-6. PCAPP should consider using bicarbonate rather than caustic (NaOH) for pH control in the ICBs, especially during start-up, because this strategy was shown to provide more precise pH control.

Temperature Impacts on Biodegradation

Temperatures in Pueblo, Colorado, vary throughout the year. Biological processes are significantly impacted by temperature, which could lead to decreased TDG removal efficiency or even reactor failure during periods of extreme temperature in summer and winter. This was noted previously in the NRC report *Interim Design Assessment for the Pueblo Chemical Agent Destruction Pilot Plant* (NRC, 2005, p. 21):

> The ICBs can operate in temperatures ranging from 95°F to 41°F, but ambient temperatures in Pueblo, Colorado, range from 115°F to −20°F. Therefore, the design must provide appropriate cooling and heating of air and water fed to the ICBs to ensure optimum operating temperatures.

An SBR study was specifically performed to investigate the stability of performance (TDG and TOC removal) over a range of operating temperatures (SBR Technologies, Inc., 1996). Stable performance was observed at temperatures from 8 to 35°C (46 to 95°F); the reactors were said to "fail,"

[10]Paul Usinowicz, Water/Wastewater Research Leader, Battelle, "Design and Operating Conditions for PCAPP's Biotreatment Process," presentation to the committee, November 28, 2012.

Copyright © National Academy of Sciences. All rights reserved.

however, when the temperatures reached 35 to 40°C (95 to 104°F) (SBR Technologies, Inc., 1996).

Design of the ICBs takes into account the potential for low temperatures during winter operation (Golder Associates Inc., 2010). To maintain the reactors at 80°F, steam will be injected at up to 580 lb/hr/reactor. However, no information was found in the calculations for the possibility of the influent becoming too warm. Consequently, there appears to be no provision for cooling the influent. Since the intent is to operate the reactors in the mesophilic range, sustained influent temperatures above the range 95 to 104°F may result in a deterioration in TDG removal.

Finding 2-8. Ambient temperatures in Pueblo, Colorado, have ranged from −31° to 109°F. Biological degradation is sensitive to temperature, and, based on data provided to the committee, performance may suffer or the process may fail completely if the PCAPP ICBs reach temperatures over approximately 100°F for sustained periods.

Recommendation 2-7. The following activities are recommended for the PCAPP biotreatment system to address local annual ambient temperature extremes:

- A heat balance calculation should be performed to anticipate operating temperatures in the ICB units.
- During systemization, the temperature ranges during summer and winter periods that might be routinely expected in the ICB units should be determined by testing.
- If needed, PCAPP staff should make provisions for cooling the ICB units or feed flow.

Solids Buildup Concerns

Solids buildup in the ICBs could have an adverse impact on long-term performance. Indeed, clogging and impedance of wastewater flow through the biofilm-supporting media could be conducive to channeling, reduced contact with the biofilm, and decreased treatment efficiency. In addition, if large quantities of biomass build up in the system, periodic large sloughing events could cause excess biomass loss, thereby causing reduced treatment efficiency. Three sources of solids are (1) influent suspended solids; (2) precipitates from the high iron content of the diluted hydrolysate; and (3) biomass formed during treatment. Excess solids buildup has been reported as a potential problem in several of the pilot studies conducted (Earley et al., 2003; Guelta, 2006).

The design feed TSS concentration to the ICBs is 1,000 mg/L with a design flow of 8,383 gpd (see Table 2-1); therefore, the solids load to each unit of 70 lb TSS/day could cause significant clogging. Data from pilot studies indicate that feed TSS varied widely, from 100 mg/L to 1,000 mg/L, and average values fed to pilot ICB reactors were between 100 and 400 mg/L (Earley et al., 2003; Guelta and Fazekas-Carey, 2003; Guelta, 2006). These studies also reported average feed VSS concentrations ranging from 30 to 200 mg/L. Thus, approximately 50 to 75 percent of the suspended solids is expected to be inorganic. Indications are that most of the inorganic suspended solids contain iron. For example, analysis of unfiltered feed to pilot-scale ICBs measured iron concentrations of 130 to 400 mg/L, while filtered samples contained 1 to 1.6 mg/L. Effluent iron concentrations from these systems ranged from 2 to 28 mg/L, indicating that iron solids were building up in these systems.

Inorganic solids can also form during treatment, especially considering the high concentration of iron in the feed. Bench-scale tests indicated that iron oxide precipitated during treatment (BPT, 2005). While it may be difficult to determine whether iron oxides precipitate (e.g., FeOOH, Fe_2O_3, $Fe(OH)_3$) during treatment, it is clear that these oxides were present in the pilot ICBs, probably entering with the feed. In addition, given the relatively high biochemical oxygen demand of the feed and the likely development of anaerobic conditions in the deeper zones of the biofilms, the committee cannot rule out the possibility that sulfate would be biologically reduced to sulfide, which in turn could precipitate with iron (e.g., FeS). It is also likely that iron phosphate ($FePO_4$) will form from the addition of DAP as a nutrient. One pilot study reported addition of 44 mg/L of phosphorus (from DAP) resulting in an ICB effluent concentration of about 4 mg/L phosphorus (SBR Technologies, Inc., 1998). The concentration of phosphorus required for the biomass growth on TDG is approximately 5 mg/L. This amount of phosphorus is derived from using a bacterial yield of 0.036 mg VSS/mg TDG and 98 percent removal of 7,000 mg/L TDG (see Table 2-1) and by assuming that the biomass contains 2 percent phosphorus by weight (Metcalf & Eddy, Inc., et al., 2003). Thus, approximately 35 mg/L phosphorus would be available for precipitation as $FePO_4$. This could form approximately 11.9 lb/day per unit of $FePO_4$ solids (assuming a flow of 8,383 gpd; see Table 2-1). Based on the estimates provided above, the production of solids within the ICB units likely ranges from about 35 to 60 lb/day (approximate concentration in 8,383 gpd is 500 to 860 mg/L).

PCAPP plans to add DAP to the feed tank, which could result in more $FePO_4$ precipitation due to the combined factors of feed tank residence time (10 to 30 days) and increased iron availability. If, however, DAP was added in the ICB recycle line, less contact between iron and phosphorus might occur, decreasing the amount of $FePO_4$ precipitation.

Since the ICBs use biofilm processes, excessive biomass could build up on the elastomer foam. As mentioned above, such accumulation could cause anaerobiosis; it could also cause clogging, channeling, and biomass sloughing. Biomass production rates can be estimated from the observed bacterial yield (Y_{obs}). Several values for Y_{obs} using different units were reported from the various pilot-scale studies.

Copyright © National Academy of Sciences. All rights reserved.

These include 0.036 g VSS/g TDG removed,[11] 0.16 g VSS/g TOC removed, and 0.293 g TSS/g TOC removed (Guelta et al., 2001); 0.06 to 0.15 g VSS/g biological oxygen demand (BOD) removed (Golder Associates Inc., 2009); and 0.07 to 0.15 g VSS/g BOD_5 removed (Nurdogan et al., 2012). Using Y_{obs} values based on TDG and TOC, along with the data given in Table 2-1, and assuming 3,300 mg/L TOC in the feed,[12] 98 percent removal of TDG, and 80 percent removal of TOC,[13] estimates of biomass production (as VSS) and total suspended solids (TSS) production range from 17 to 30 lb VSS/day and 26 to 54 TSS lb/day, respectively, for each ICB unit.

While it is not possible to directly combine the three types of solids described above, it is clear that the amount of all three (influent solids, solids precipitated during treatment, and biomass production) have the same order of magnitude, and their total production is about 100 to 150 lb TSS/day per unit. These values are close to the design estimated total biomass production of 150 to 200 lb/day per unit.[14] In a flow of 8,383 gpd, this represents concentrations of 1,500 to 2,200 mg/L TSS. These levels could cause clogging and associated performance deterioration. This issue must be addressed through discussions with the technology provider and potential trial-and-error operation to determine the optimal biomass sloughing schedule, rotation between units to avoid too much mass being sent to the evaporator/crystallizer, and intensity of scour needed. If necessary, packing media could be removed from the units to enhance fluidization and sloughing. There is also a plan to remove solids from the bottom of the reactor if they accumulate; nevertheless, this may be difficult to perform, considering the flat floor of the reactors and the relatively small access port.[15]

Finding 2-9. The hydrolysate produced at PCAPP will have high influent total suspended solids concentrations (up to 1,000 mg/L); therefore, solids may build up in the ICBs. Precipitation during treatment may also produce inorganic solids. Furthermore, excessive biomass may build up within the packing of the ICB units. Solids accumulation may cause changes in the hydraulic characteristics of the units, potentially causing clogging and reduced contact with the biofilm that decreases TDG removal efficiency.

Finding 2-10. Sloughing and solids release events are likely to be intermittent for the PCAPP ICBs. Thus, large quantities of solids might be released occasionally.

Recommendation 2-8. Once operational, PCAPP should perform ongoing solids balance calculations for the ICBs, using influent and effluent solids and influent solution chemistry to estimate the precipitates that are likely to form and the amount of biomass produced. This should be used to anticipate issues related to solids buildup and to assist with preventive maintenance scheduling, such as flushing/scouring or even system shut-down and solids removal.

Recommendation 2-9. Composite samples should be taken because the release of solids from the ICBs at PCAPP can be intermittent. These composite samples should be used to characterize the effluent and perform mass balances of solids.

Recommendation 2-10. The preliminary quantification by the committee points to likely problems with excess solids. PCAPP staff should consider using a settling tank to remove total suspended solids from the influent to the ICB units.

Recommendation 2-11. If solids accumulation and phosphorus nutrient availability become a problem, PCAPP staff should consider moving the diammonium phosphate (DAP) feed point from the feed tank to the recycle line within each unit to avoid excessive $FePO_4$ precipitation and DAP use.

Recommendation 2-12. If the ICB technology provider cannot provide adequate information regarding biomass accumulation and sloughing expectations with the waste that will be processed through the ICBs at PCAPP, either the technology provider or the PCAPP staff should consider testing an ICB unit during systemization for 3 to 6 months with a benign and common substrate, such as molasses (fed at the same chemical oxygen demand concentration as the hydrolysate), to determine likely biomass accumulation and sloughing issues. Time should be provided to allow the biomass to dry fully and be flushed from the system before start-up with hydrolysate.

Oxygen Demand and Flux Issues

Air will be supplied to the ICBs via two 3,600-scfm blowers per module, equivalent to 1,800 scfm per ICB tank. The air will be distributed via 40 coarse air diffusers in the first chamber and 20 each in the second and third chambers.[16] The basis for this design is a set of calculations performed by Tideflex Technologies using a Diffused Aeration Modeling Program (version 02-20-2009; Tideflex Technologies, 2010).

[11]James P. Earley, Principal Engineer and PCAPP Task Manager, SAIC, "PCAPP Biotreatment System Update," presentation to the Committee on Chemical Demilitarization, September 15, 2011, National Research Council, Washington, D.C.

[12]Ibid.

[13]Ibid.

[14]George Lecakes, Chief Scientist, PCAPP, "PCAPP's Water Recovery System and Brine Reduction System Briefing," presentation to the committee, May 1, 2012.

[15]Paul Usinowicz, Water/Wastewater Research Leader, Battelle, "Design and Operating Conditions for PCAPP's Biotreatment Process," presentation to the committee, November 28, 2012.

[16]Paul Usinowicz, Water/Wastewater Research Leader, Battelle, "Design and Operating Conditions for PCAPP's Biotreatment Process," presentation to the committee, November 28, 2012.

Copyright © National Academy of Sciences. All rights reserved.

Several assumptions used in the model agree reasonably well with the assumptions used by the committee regarding feed flow rate and composition (see Table 2-1). For example, Tideflex assumed a peak flow rate of 9,648 gpd and an influent COD of 14,631 mg/L, 85 percent of which was assumed to be BOD. Based on an assumed process oxygen stoichiometric coefficient of 1.1 kg O_2/kg of BOD (which is reasonable for an aerobic system with an SRT over 40 days), the predicted oxygen demand is 498 kg/day per ICB unit. The mass rate of oxygen required was converted to an air flow rate of 1,880 scfm based on several assumptions, the most important of which was a diffuser efficiency of 7 percent, which is the fraction of oxygen delivered by the submerged diffuser that is transferred to the water phase. This is likely to be conservative, since the coarse bubbles will be broken up as they pass through the elastomer foam media, thereby improving the oxygen transfer efficiency.

The design of the ICB aeration system has the entire hydrolysate feed flow entering the first chamber (one half the volume of the total unit), yet the air supply will be uniformly distributed throughout the 42,000-gallon tank volume (based on uniform distribution of the diffusers). The ICB system as currently configured for operation does not permit recirculation between chambers or step feeding of the influent to the second and third chambers. Consequently, it is possible that anaerobic conditions will develop within the pore spaces of the foam media, possibly leading to development of sulfidogenic conditions in the first chamber.

The calculations by Tideflex Technologies did not take into account oxygen flux-limited conditions within the biofilm, which could lead to decreased TDG degradation and excessive sloughing. Providing sufficient oxygen to meet the stoichiometric oxygen demand of the waste does not guarantee that oxygen will diffuse into the biofilm as fast as its demand is exerted. In biofilm reactors, the oxygen supply must often be higher than the stoichiometric demand to increase the concentration gradient, and thus the diffusive flux into the biofilm, to ensure that the rate of degradation is not limited by the rate of oxygen diffusion.

Several strategies may be used to mitigate oxygen deficient conditions in the first chamber, including the following:

1. Modification of the influent piping to allow for introduction of feed to the second and third chambers. Step feeding would distribute the loading more evenly, to better match the oxygen supply with demand. Operation in this manner could be reserved for periods when the oxygen level in the first tank falls below the target bulk concentration of 2 mg/L.
2. Modification of the recirculation piping to allow for recirculation from the second and third tanks to the first. As currently configured for operation, recirculation is only to take place within the first chamber. These recirculation options would improve the flexibility of operation and improve the ability to better match the oxygen demand and supply.
3. Addition of nitrate to the feed to serve as a supplemental electron acceptor and nitrogen source (instead of urea). Nitrate is more soluble than oxygen and can, therefore, be fed at a higher concentration, facilitating better penetration into the interior of the foam media; this can mitigate sulfidogenic conditions. As mentioned above, biodegradation of TDG under anoxic conditions has not yet been demonstrated but seems likely, given its biodegradability under aerobic conditions and the likelihood that catabolism occurs via a pathway in which oxygenases are not involved.
4. Pure oxygen could be used instead of air. This would also mitigate the potential for developing flux-limiting conditions within the biofilm.

The oxygen demand predicted by Tideflex Technologies assumes that nitrification will not occur at any point in the ICB units. This should be monitored closely, since nitrification would add considerably to the oxygen demand. If most of the BOD is removed in the first and/or second tank and there is an excess of ammonium in the feed (e.g., created by urea addition and a high demand for DAP from the precipitation of phosphorus with iron),[17] nitrification could become established in the third chamber. If an excessive oxygen demand due to nitrification does develop, it may be advisable to switch from DAP and urea to a different form of phosphorus (e.g., potassium phosphate) and nitrogen (e.g., nitrate) to have better control over nutrient addition. The use of nitrate instead of ammonium for the source of nitrogen provides three major benefits. The first is the elimination of nitrification, which will lower the oxygen demand in the ICBs that may already have a marginal oxygen supply. Second, the nitrification of ammonia to nitrate generates protons (acid), so using nitrate will lessen the need for neutralization with caustic addition. Finally, nitrate will eliminate growth of nitrifying bacteria, which will help to reduce the amount of biomass solids produced.

Finding 2-11. The mass rate of oxygen demand predicted by Tideflex Technologies is in good agreement with assumptions used by the committee for the PCAPP ICB influent.

Finding 2-12. The air supply rate was calculated by Tideflex Technologies based on the total mass rate of BOD and on an evenly distributed air supply in proportion to the volume of each chamber. However, the BOD will not be distributed evenly for operation as currently planned; all of the loading would be added to the first chamber of each ICB unit.

[17]Note that phosphorus precipitation was not taken into account in the nutrient demand calculations performed by Golder Associates sent to the committee (Golder Associates Inc., 2010).

Copyright © National Academy of Sciences. All rights reserved.

Consequently, oxygen-deficient conditions may develop in the first chamber. This is likely to result in development of anaerobic conditions within the foam medium.

Recommendation 2-13. PCAPP should consider performing trials with a benign and common substrate, such as molasses, to determine if sufficient oxygen can be delivered to maintain aerobic conditions within the biofilm in the current ICB configuration.

Recommendation 2-14. In an aerobic biofilm process, meeting the stoichiometric oxygen requirement is not sufficient to ensure that oxygen flux (by diffusion into the biofilm) is not rate limiting. If it has not already been performed, the biofilm should be modeled to indicate if the biofilm will be oxygen flux-limited under best-case conditions.

Recommendation 2-15. PCAPP should consider modifying both the influent and recirculation piping to permit step feeding and chamber-to-chamber recirculation that would provide more flexibility for matching the air supply with the oxygen demand.

Recommendation 2-16. PCAPP should consider adding nitrate to the feed to serve as a supplemental electron acceptor and nitrogen source; it should be provided at a sufficiently high dose to prevent sulfidogenic conditions within the biofilm.

Recommendation 2-17. In the event that nitrification is established and contributes excessively to the oxygen demand, PCAPP should consider changing from diammonium phosphate to another form of phosphorus and urea to another form of nitrogen (e.g., nitrate) to have better control of nitrogen and phosphorus addition.

Recommendation 2-18. If the oxygen supply from delivered air becomes inadequate, pure oxygen should be considered as a replacement for air in the PCAPP ICBs.

Start-up Issues

An aggressive start-up phase is proposed for the ICB units at PCAPP. For example, the goal is to first treat the hydrolysate from the 155-mm projectiles; this results in the highest TDG mass loadings and feed flow to the ICB units. In the current plans, the biomass seed will be collected from the Colorado Springs publicly owned treatment works. The PCAPP staff has suggested that acclimation would require approximately 30 days: that is, the amount of hydrolysate in the feed will be ramped up from high dilution to the design feed (1 part hydrolysate to 7 parts recycled process water) within 30 days. The committee believes that start-up and acclimation will be critical to the success of the system, particularly in light of the potential toxicity and inhibition issues, potential for solids buildup, and challenges with the oxygen supply, pH buffer, and nutrient addition discussed above. Therefore, acclimation may require a longer duration than planned, with TDG feed concentrations increasing very slowly to the desired 7,000 mg/L.

Finding 2-13. The mixture of mustard agent hydrolysate and recycled water to be produced at PCAPP constitutes a unique and complex feed to be processed through the ICBs. The committee believes that start-up will be the most critical phase in establishing stable treatment in the ICBs.

Recommendation 2-19. Extensive monitoring of the hydrolysate as it is produced and of the PCAPP ICBs should occur, particularly in the start-up phase, to ensure that the system is robust and that the PCAPP operators have an accurate understanding of oxygen use, pH control, TDG degradation, biomass acclimation and development, and the solids mass balance.

Recommendation 2-20. The committee understands that the current plans are to start up the ICBs with the hydrolysate feed and achieve full design strength within 30 days. PCAPP should consider a longer ramp-up period to avoid system failure and provide more time for the organisms to acclimate to the hydrolysate feed. Approaches include the following:

- Starting up some units in parallel with different hydrolysate loading or sequentially to use the knowledge from one operating period to help optimize the conditions for the next operating period. This would allow time to observe the response of a subset of the PCAPP ICB units with hydrolysate feed and fully test out potential operating parameters before attempting to bring all 16 units online at the maximum design feed flow and TDG concentration.
- Testing the ICB operation in advance with a benign substrate during the systemization phase (as noted in the section above, "Solids Buildup Concerns") to provide valuable performance and operating data that will aid the start-up phase of the ICB units with the hydrolysate containing TDG.
- Using surrogates that are easy to analyze, such as dissolved or total organic carbon, to predict/monitor TDG degradation in near-real time.

TDG accounts for about 85 percent of DOC or TOC values. So if 95 percent removal of DOC or TOC occurs, one can be confident that a substantial amount of the TDG is being removed. The committee is not recommending that a surrogate only be used from Day 1, rather, that DOC or TOC data be collected along with TDG data to establish if there is a good correlation between their behaviors. After having a track record of monitoring both parameters, eventually the DOC or TOC might then be used for routine monitoring,

Copyright © National Academy of Sciences. All rights reserved.

and then TDG could be sampled only as needed, e.g., for regulatory compliance.

Analysis and Composition of the Effluent and Off-Gas from the Bioreactors

The PCAPP staff has indicated that they will monitor effluent ammonium to determine nutrient uptake and urea addition requirements for the bioreactors. There are two possible competing strategies for adding nitrogen. The first is as a nutrient for biomass synthesis, and the amount of nitrogen supplied should be just enough to meet the stoichiometric need of the biomass. Thus, the nitrogen concentration in the effluent should be low. The second need for nitrogen might be addition of nitrate to suppress sulfate reduction, and this will likely require a considerably higher nitrate concentration. Consequently, the addition of nitrogen may end up being a complex operational issue. Furthermore, if ammonium is supplied in excess, nitrification could take place in the second and third chambers of a unit, oxidizing the ammonium to nitrate. This possibility is discussed above. Indeed, this was observed in earlier pilot testing (SBR Technologies, Inc., 1998). Simply monitoring for the residual ammonium concentration in the effluent and/or bioreactor units underestimates the presence of other nitrogen species (nitrate and nitrite), which could lead to excessive urea addition to the unit, increasing the oxygen demand and cost.

Finding 2-14. Nitrification could take place in the second and third chambers of a given PCAPP ICB unit, transforming ammonium to nitrate. If nitrogen dosing is based only on effluent ammonium, excessive urea addition to the unit could result.

Recommendation 2-21. There are complications involved with the addition of nitrogen, so a more comprehensive monitoring strategy should be employed. Ammonium, nitrate, and nitrite should be monitored for the PCAPP ICBs and an effluent target of 1 mg/L of residual ammonium as nitrogen should instead be changed to 1 mg/L of total residual nitrogen (ammonium, nitrate, and nitrite, as nitrogen).

The amounts of solids, soluble microbial products (organic compounds produced by the biomass), TDG, recalcitrant organics from the hydrolysate feed, and inorganics in the effluent from the ICBs are likely to be variable and are currently unknown. The ICB performance requirement is to remove at least 95 percent of feed TDG. The treatment goal for COD is to remove at least 85 percent of the feed concentration. Beyond these two parameters, there is uncertainty with respect to the concentration and composition of the ICB effluent. The amount of dissolved solids will be controlled in part by the salt content of the hydrolysate and in part by the amount of caustic and nutrients that must be added. The effluent TSS will depend on how much of the feed TSS accumulates in the bioreactor and how much is formed in the bioreactor. The amount of biomass (typically measured as VSS) in the effluent will be dictated by periodic sloughing and the planned scour and backwash. Spikes in effluent biomass concentration could be large during these episodic events.

The type and concentration of constituents in the ICB effluent may affect the performance of downstream processes. For example, inorganic constituents and bacteria may contribute to fouling of the WRS-BRS system (e.g., hinder heat transfer and evaporation). Residual VOCs such as oxathiane or dithiane may condense upon cooling in the vent condenser, potentially blocking it. Some dissolved organic compounds, such as biosurfactants and proteins, could cause foaming and damage compressors.

Little is known about the composition of the bioreactor off-gas. Although one study with a SBR (Harvey et al., 1997) that was fed approximately 8,500 mg/L TDG with an hydraulic residence time of approximately 13 days did not find detectable levels of vinyl chloride and 1,2-dichloroethane in the effluent (detection limits of 0.2 and 0.1 mg/L, respectively), the hydrolysate is known to possibly contain trace volatile contaminants that could end up in the off-gas of the bioreactor. The treatment train includes passing the off-gas through a granular activated carbon adsorber to remove any odorous and toxic VOCs (BPT, 2006b).

Finding 2-15. The precise composition and characteristics of the effluent and off-gas from the PCAPP ICBs are unknown, variable, and might affect downstream processing.

Recommendation 2-22. The composition and characteristics of the effluent and off-gas from the PCAPP ICBs should be closely monitored, especially during start-up, to anticipate potential long-term concerns for downstream processing.

REFERENCES

Bechtel Pueblo Team (BPT). 2005. Test Report for Bench-Scale Evaluation of HT, HD, and Energetics Hydrolysis and Biotreatment. Pueblo, Colo.: Bechtel.

Bechtel Pueblo Team (BPT). 2006a. System Design Description (SDD) for Biotreatment System No. B09. Pueblo, Colo.: Bechtel.

Bechtel Pueblo Team. 2006b. System Design Description (SDD) for Bioreactor Off-Gas Treatment System No. B11. 24852-RD-3YD-B11-BOO01. Pueblo, Colo.: Bechtel.

Earley, J.P., M.A. Guelta, and J.R. Mashinski. 2003. Biological Treatment of Agent and Energetic Hydrolysates Generated from the Washout of Mustard (HD) Munitions. Aberdeen Proving Ground, Md.: U.S. Army Soldier and Biological Chemical Command.

Golder Associates, Inc. 2009. Golder's Immobilized Cell Bioreactor (ICB™) General Technology Description. Atlanta, Ga.: Golder Associates, Inc.

Golder Associates, Inc. 2010. MEB Calculation 101, Rev. 5. Atlanta, Ga.: Golder Associates, Inc.

Copyright © National Academy of Sciences. All rights reserved.

Guelta, M.A. 2006. Biodegradation of HT Agent from an Assembled Chemical Weapons Assessment (ACWA) Projectile Washout Study. ECBC-TR-486. Aberdeen Proving Ground, Md.: Edgewood Chemical Biological Center.

Guelta, M.A., and J.J. DeFrank. 1998. Performance of Immobilized Cell Bioreactors for Treatment of HD and VX Hydrolysates. ERDEC-TR-437. Aberdeen Proving Ground, Md.: Edgewood Research, Development and Engineering Center.

Guelta, M.A., and L. Fazekas-Carey. 2003. Biodegradation of Hydrolyzed Mustard from an Assembled Chemical Weapons Assessment (ACWA) Projectile Washout Study. ECBC-TR-291. Aberdeen Proving Ground, Md.: Edgewood Chemical Biological Center.

Guelta, M.A., N.A. Chester, S. Lupton, M. Koch, I.J. Fry, and M.H. Kim. 2001. Biodegradation of HD and Tetrytol Hydrolysates in a Pilot Scale Immobilized Cell Bioreactor. ECBC-TR-192. Aberdeen Proving Ground, Md.: Program Manager for Assembled Chemical Weapons Assessment.

Guelta, M.A., N.A. Chester, C.W. Kurnas, M.V. Haley, F.S. Lupton, and M. Koch. 2002. Performance of the ACWA Pilot Scale Immobilized Cell Bioreactor in Degradation of HD and Tetrytol Payloads of the M60 Chemical Round. Aberdeen Proving Ground, Md.: Edgewood Chemical Biological Center.

Harvey, S.P., L.L. Szafraniec, W.T. Beaudry, M.V. Haley, T.E. Rosso, G.P. Young, and J.P. Earley. 1996. HD Hydrolysis/Biodegradation Toxicology and Kinetics. ERDEC-TR-382. Aberdeen Proving Ground, Md.: Edgewood Research Development and Engineering Center.

Harvey, S.P., L.L. Szafraniec, W.T. Beaudry, J.T. Earley, and R.L. Irvine. 1997. Neutralization and Biodegradation of Sulfur Mustard. ERDEC-TR-388. Aberdeen Proving Ground, Md.: Edgewood Research Development and Engineering Center.

Klotzbücher, T., A. Kappler, K.L. Straub, and S.B. Haderlein. 2007. Biodegradability and groundwater pollutant potential of organic anti-freeze liquids used in borehole heat exchangers. Geothermics 36(4): 348-361.

National Research Council (NRC). 2005. Interim Design Assessment for the Pueblo Chemical Agent Destruction Pilot Plant. Washington D.C.: The National Academies Press.

Metcalf & Eddy, Inc., G. Tchobanoglous, F. Burton, and H.D. Stensel. 2003. Wastewater Engineering Treatment and Reuse, 4th Edition. Boston, Mass.: McGraw-Hill.

Nurdogan, Y., C.A. Myler, G.D. Lecakes, P.J. Usinowicz, and E.P. Blumenstein. 2012. Biological Treatment of Chemical Agent Hydrolysate by Immobilized Cell Bioreactor Technology. New Orleans, La.: Water Environment Federation Technical Exhibition and Conference. Available at http://www.golder.com/global/us/modules.php?name=Publication&sp_id=267&page_id=212#/!ts=1358887602837!. Accessed January 22, 2013.

Rittmann, B.E., and P.L. McCarty. 2001. Environmental Biotechnology: Principles and Applications. Boston, Mass.: McGraw-Hill.

SBR Technologies, Inc. 1996. Biodegradation of HD Hydrolysate in Sequencing Batch Reactors. South Bend, Ind.: SBR Technologies, Inc.

SBR Technologies, Inc. 1998. Final Report Evaluation of the Impact of Waste Water from the HD Neutralization/Biodegradation Treatment Process on the Aberdeen Proving Ground Edgewood Area Federally Owned Treatment Works, Test 7: Organic Loading Study. South Bend, Ind.: SBR Technologies, Inc.

Tideflex Technologies. 2010. Diffused Aeration System Modeling: PCAPP, Pueblo, Colorado—ICB Bioreactors Coarse Bubble Aeration and Mixing System. Carnegie, Pa.: Tideflex Technologies.

Xiu, Z.-M., J. Ma, and P.J.J. Alvarez. 2011. Differential effect of common ligands and molecular oxygen on antimicrobial activity of silver nanoparticles versus silver ions. Environmental Science and Technology 45(20): 9003-9008.

Copyright © National Academy of Sciences. All rights reserved.

3

The Water Recovery and Brine Reduction Systems

Downstream from the biotreatment area at Pueblo Chemical Agent Destruction Pilot Plant (PCAPP), the PCAPP water recovery system (WRS) performs the following functions:[1]

- Collects and mixes immobilized cell bioreactor (ICB) effluent with other wastewater streams,
- Provides equalization of the collected liquid streams,
- Provides up to 7 days of storage of the feed to the brine reduction system (BRS), and
- Transfers brine liquid from the WRS to the BRS.

Consequently, the WRS at PCAPP can be considered essentially as tankage and associated piping used to collect, mix, and condition the various liquid effluents for delivery to the main operations involved in water recovery that occur in the BRS. The BRS will be the focus of this chapter.

The BRS designed for PCAPP is a conventional evaporator/crystallizer system that comprises the following unit operations listed in the sequence in which the liquid feed flows through them:

1. Acid addition,
2. Feed/distillate heat exchange,
3. De-aeration (CO_2 stripping),
4. Evaporation with steam compression,
5. Caustic addition,
6. Crystallization,
7. Belt filtration,
8. Condensation, and
9. Activated carbon adsorption applied to both condensates and off-gases.

Figure 3-1 is a block flow diagram of the BRS, and Figure 3-2 is a photograph of the BRS installation at PCAPP.

[1]George Lecakes, Chief Scientist, PCAPP, "PCAPP's Water Recovery System and Brine Reduction System Briefing," presentation to the committee, May 1, 2012.

ACID ADDITION, FEED/DISTILLATE HEAT EXCHANGE, AND CO_2 STRIPPING

The effluent from the ICBs collects in the WRS-BRS feed tanks where effluent streams from three other sources, namely, boiler blowdown, cooling tower blowdown, and reverse osmosis system reject water, are also introduced. This combined stream is pumped to the brine concentrate (BC) evaporator feed tank at a design flow-rate of 120 gallons per minute (gpm). The composition of the combined stream that was used for the design basis for the BRS is given in Table 3-1. To prevent calcium carbonate fouling of the evaporator heat exchangers, the carbonate and bicarbonate in the evaporator feed, most of which originates from the biological breakdown of organic matter in the ICBs, is removed by a three-stage process: (1) feed acidification, (2) feed preheating, and (3) feed deaeration. First, concentrated sulfuric acid is metered into the BC evaporator feed tank for acidification. The sulfuric acid converts the carbonate and bicarbonate ions to CO_2, which is subsequently stripped out of the liquid in the feed deaerator by using excess steam vented from the evaporator. The committee notes that a pH of ~ 2 to 4 could cause acid hydrolysis of biomass exiting the ICBs. This would result in some solubilization of organic compounds (e.g., proteins, fatty acids), which may impact downstream processing in the BRS, such as increased foaming, increased organic loading to the carbon filters, and less effective dewatering of solids. The latter could lead to excessive costs related to shipping water. If this becomes a problem, a clarifier can be added to remove the biomass after the ICBs and before the WRS-BRS.

Prior to entering the feed deaerator, the cold feed is heated by the hot outgoing distillate in the BC feed preheater. This preheater comprises 10 shell-and-tube heat exchangers connected in series. The feed stream passes through the tubes, and the hot product distillate returning from the evaporator and crystallizer passes through the shell surrounding the tubes. The tubes are arranged in a two-pass configuration.

Copyright © National Academy of Sciences. All rights reserved.

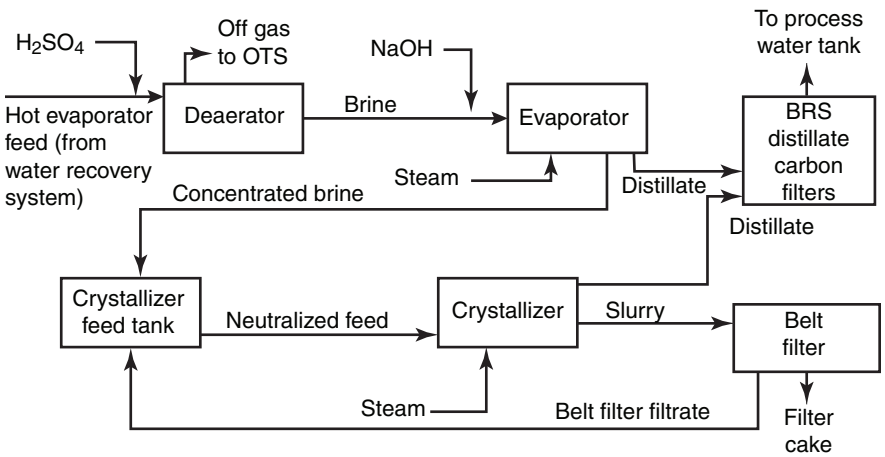

FIGURE 3-1 Block diagram of the brine reduction system. NOTE: OTS, off-gas treatment system. SOURCE: Adapted from Veolia Water Solutions & Technologies, Bench Scale Evaporation of Waste Brine and Filter Testing, 2010. Used with permission.

FIGURE 3-2 Brine reduction system installation at PCAPP. NOTE: The three tanks in the center-left foreground are granular activated carbon adsorbers for the product distillate. SOURCE: Provided courtesy of PCAPP staff.

Copyright © National Academy of Sciences. All rights reserved.

TABLE 3-1 Design Basis for Combined System Feed to PCAPP Water Recovery and Brine Reduction Systems

Identification	Combined System Feed, lb/hr (unless otherwise noted)
Flow rate	60,700 (120 gal/min)
Water	59,600
Calcium	1.4
Magnesium	0.2
Sodium	331
Potassium	0.0
Barium	0.0
Strontium	0.0
Ammonium	2.7
Ammonia	0.0
Iron	6.3
Bicarbonate	21.5
Carbonate	1.8
Carbon dioxide	0.3
Chloride	264
Sulfate	340
Nitrate	0.0
Phosphate	1.7
Silica	0.3
TOC	53.7
Hydroxide	0.0
Hydrogen	0.0
Suspended solids	60.0
TDS (by summation)	17,100 ppm
TSS (by summation)	990 ppm
Temperature	102°F
Specific gravity	1.011

SOURCE: Adapted from George Lecakes, Chief Scientist, PCAPP, "PCAPP's Water Recovery and Brine Reduction System Briefing," presentation to the committee, May 1, 2012.

Two banks of heat exchangers are provided in parallel so that the tubes of one bank can be cleaned while the other is online. The feed preheater serves two purposes: (1) to recover heat from the distillate product, thereby allowing the evaporator to operate under stable conditions without using make-up steam and (2) to increase the partial pressure of the dissolved CO_2 in the feed stream, all of which allows the feed deaerator to operate more efficiently. Furthermore, to avoid precipitation of calcium sulfate in the evaporator, the calcium concentration in the feed must not exceed 3,000 ppm on a dry solids basis (Veolia Water Solutions & Technologies, 2012).

Deaeration (also called CO_2 stripping) is accomplished by contacting the liquid feed stream with steam in a column. The feed stream is introduced into the top of the column utilizing a spray nozzle, and steam is introduced at the bottom of the column. Contact between the feed stream and the steam is facilitated by three baffles within the column. Should it be required, provision has been made for an entrainment separator to be used at the top of the column to remove entrained liquid droplets from the steam leaving the column.

Prior to the feed preheater, an antiscalant is added to the liquid feed stream. This antiscalant suppresses the formation of solids in the feed preheater and deaerator, thereby dramatically reducing scaling on the surfaces and the frequency of cleaning of the hardware (Veolia Water Solutions & Technologies, 2012). After passing through the deaerator, the deaerated liquid feed is added to the liquid in the BC evaporator vessel, entering at a point above the liquid that resides at the bottom of the evaporator.

EVAPORATION WITH STEAM COMPRESSION

The evaporator comprises a shell-and-tube heat exchanger located above an evaporator vessel, as shown in a simplified illustration in Figure 3-3. The shell-and-tube heat exchanger consists of 596 50-foot-long tubes (represented by a single tube in Figure 3-3) surrounded by a shell containing steam. As the liquid flows down inside the tubes, it partially evaporates, and steam and liquid leave the bottom of the tubes and enter the evaporator vessel. Fresh liquid feed from the deaerator is introduced to the evaporator vessel, where it mixes with the unevaporated liquid that leaves the tubes. An anti-foam additive and caustic solution to maintain the pH in the range of 7.5 to 8.0 are added to the liquid in the evaporator vessel.

This mixed liquid is then pumped from the bottom of the evaporator vessel to the top of the tubes where, ideally, it is distributed uniformly to each tube. Evaporation is caused by heat transfer across the tube walls from the steam in the shell to the liquid inside the tubes. The steam that is produced within the tubes by evaporation leaves the tubes and enters the evaporator vessel below the heat exchanger. As shown in Figure 3-3, the steam is subsequently removed from the evaporator vessel and compressed, as described below, to increase its condensing temperature.[2] The steam is then introduced into the shell of the heat exchanger (i.e., the encased volume external to the tubes). The steam that condenses in the shell is taken off as distillate product. De-entrainment baffles are provided in the evaporator vessel to remove liquid drops from the steam before it leaves the evaporator vessel to be compressed.

After leaving the evaporator vessel, the steam is first washed in a column with water sprays to remove solids. Then, a demister removes liquid drops before the steam enters the compressor to ensure that no liquid droplets are carried over into the vapor compressor impeller. Any liquid droplets traveling at high velocities through the vapor compressor could damage the equipment.

The liquid level in the evaporator vessel must be maintained sufficiently high to avoid cavitation of the liquid recirculation pump. However, an excessively high liquid level in

[2]The condensing temperature of steam increases as its pressure is increased. The temperature in the shell has to be higher than the temperature in the tubes to achieve heat transfer.

Copyright © National Academy of Sciences. All rights reserved.

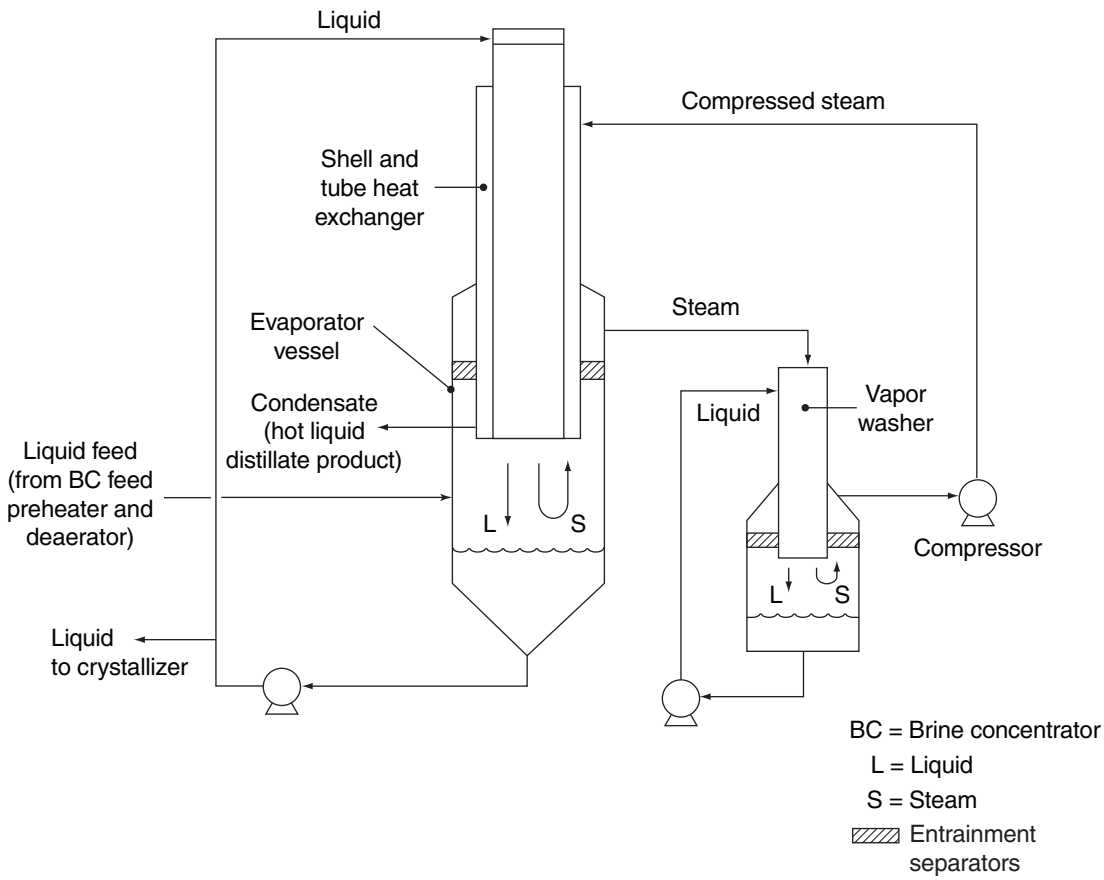

FIGURE 3-3 Simplified diagram of the 596-tube brine concentrate (BC) evaporator and BC vapor washer. SOURCE: Developed by the committee from Bechtel Pueblo Team Drawing 24852-RD-M5-B12-B0001 Rev. P00, Process Flow Diagram, Evaporator.

the evaporator vessel must be avoided to reduce carryover of liquid droplets in the steam going to the compressor, which could result from overload of the de-entrainment devices in the evaporator vessel. This could lead to poor quality of the condensate distillate product and even damage the compressor. The liquid level in the evaporator is controlled by changing the liquid flow to the crystallizer. As noted previously, an anti-foaming agent can be added to the evaporator vessel, as needed.

The control of pH in the evaporator is managed by feeding caustic in direct proportion to the incoming feed flow. Therefore, the pH must be monitored by operators during the routine sampling program developed for the plant.

CRYSTALLIZER DESCRIPTION

A simplified block diagram of the crystallizer system is shown in Figure 3-4. The crystallizer feed tank is a vertical tank operating at atmospheric pressure. The concentrated liquid from the evaporator is blended with the filtrate from the belt filter in the crystallizer feed tank (see Figure 3-1). Caustic is added to the crystallizer feed tank to elevate the pH in order to reduce the corrosiveness of the brine. This combined feed is transferred to the crystallizer vessel. An anti-foam additive is added to the crystallizer vessel.

A pump recirculates the slurry from the crystallizer vessel through a shell-and-tube heat exchanger, where it is heated. Low-pressure steam is supplied to the shell of the heat exchanger from a boiler, and the slurry flows in two passes through the tubes. The increased pressure of the slurry suppresses vaporization in the heat exchanger, preventing boiling and resultant scaling. The liquid slurry from the heat exchanger is reintroduced into the crystallizer vessel, where the lower pressure causes the liquid to partly vaporize. The unevaporated slurry falls back to the bottom of the crystallizer vessel. The vaporized liquid (steam), shown exiting the crystallizer vessel in Figure 3-4, flows to a condenser where it is condensed to distillate product. Chevron baffles are provided in the crystallizer vessel to remove liquid drops from the steam before it enters the condenser. Liquid with a high concentration of suspended solids forms a slurry. As the water evaporates and the slurry liquor concentration increases beyond saturation, the supersaturated salts form crystals.

Copyright © National Academy of Sciences. All rights reserved.

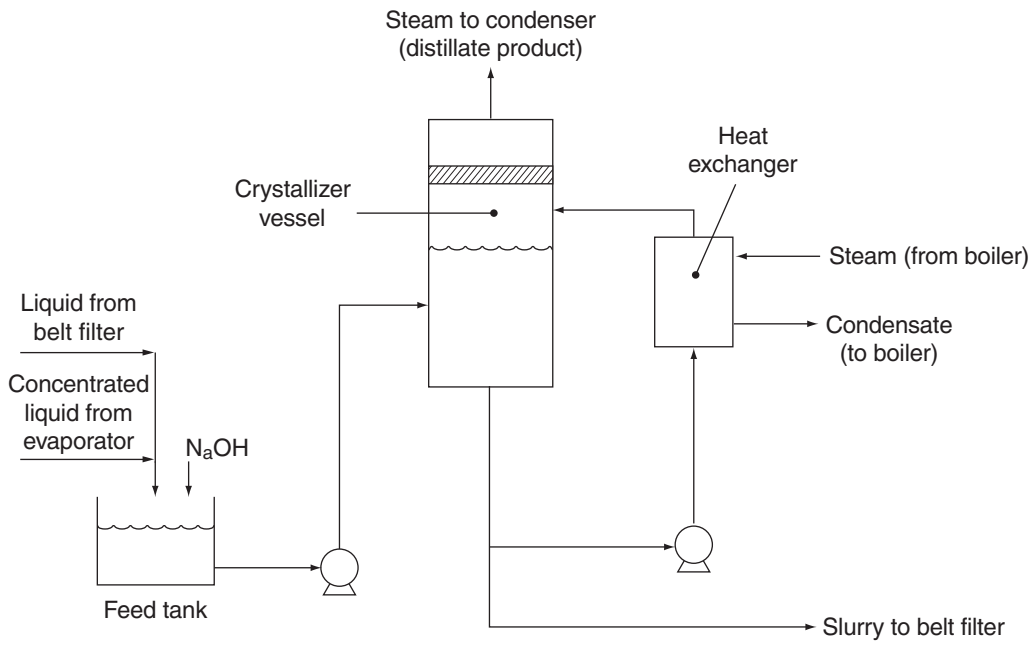

FIGURE 3-4 Simplified diagram of the crystallizer. SOURCE: Developed by the committee from Bechtel Pueblo Team Drawing 24852-RD-M5-B12-B0002 Rev. P00, Process Flow Diagram, Crystallizer.

The BRS throughput is controlled via the crystallizer heat exchanger steam pressure. An increase in the flow of steam to the crystallizer heat exchanger increases the evaporation rate, thus increasing the plant throughput. The slurry discharge rate from the crystallizer to the belt filter (see Figure 3-1) is adjusted to maintain the desired concentration of solids in the crystallizer. As the steam flow to the crystallizer heat exchanger is increased, the feed rate to the BRS belt filter must also be increased to maintain the desired solids concentration.

BELT FILTRATION

When the slurry concentration reaches the design value, the concentration is controlled by blowing down a portion of the slurry to the belt filter, which is a fully automated pressure filter. Concentrated slurry is removed from the crystallizer slurry circulation loop at a point upstream of the recirculation pump. Recovered filtrate is returned to the crystallizer feed tank. The belt filter produces a wet cake that will most likely be suitable for disposal at a hazardous waste landfill.

CONDENSATION OF VAPOR FROM THE DEAERATOR, EVAPORATOR, AND CRYSTALLIZER

The steam from the CO_2 stripper (deaerator) is condensed in a shell-and-tube heat exchanger. The condensate is then mixed with the liquid distillate products from the evaporator and the crystallizer to produce a combined distillate stream, as shown in Figure 3-5.

The distillate product leaving the BC feed preheater is cooled in the BRS distillate cooler by cooling water before entering the BRS distillate carbon filter feed tank, which is part of the distillate carbon adsorption system. As the distillate product passes through the BRS distillate static mixers, the combined distillate stream is chemically treated with caustic or acid to maintain the required pH. The combined distillate stream is processed for removal of organic matter in the BRS distillate carbon filters and then returned to the plant for reuse.

The majority of the vapor entering the crystallizer condenser condenses and drains by gravity to the BC evaporator distillate tank. The remaining vapor combines with the vented vapor from the BC feed deaerator and passes to the BRS vent condenser where some condenses and drains by gravity to the BRS distillate carbon filter feed tank. As shown in Figure 3-5, the residual vapor combines with vent gases from the BC evaporator feed tank, crystallizer feed tank, carbon filter feed tank, and the BRS area sump. The combined gas flow passes through the entrainment separator of the BRS off-gas treatment system (OTS) to remove any residual water. It is then heated in the BRS OTS heater to reduce the relative humidity to 50 percent or less, and the concentration of organic material is reduced by adsorption in the BRS OTS carbon filters. By reducing the humidity of the combined gas stream, the capacity of the OTS carbon filters to adsorb organic compounds is increased, since there

Copyright © National Academy of Sciences. All rights reserved.

Review of Biotreatment, Water Recovery, and Brine Reduction Systems for the Pueblo Chemical Agent Destruction Pilot Plant

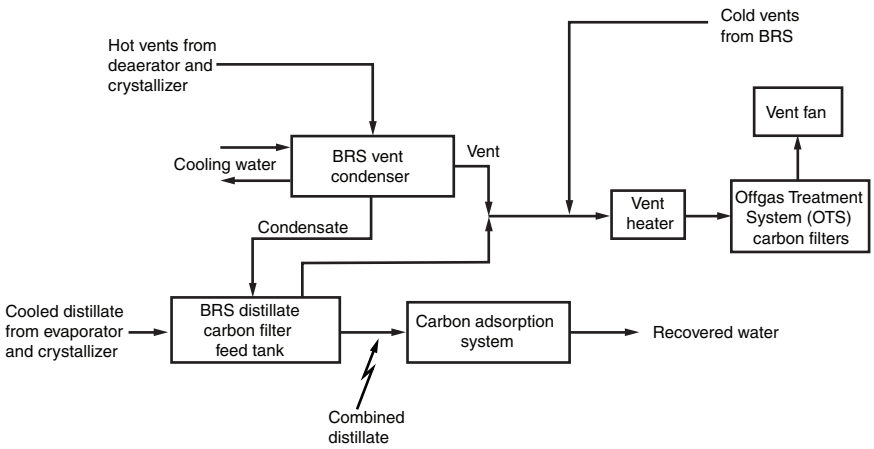

FIGURE 3-5 Block diagram of the carbon filter system. SOURCE: Adapted from Veolia Water Solutions & Technologies, Bench Scale Evaporation of Waste Brine and Filter Testing, 2010. Used with permission.

is less competition with water vapor for adsorption sites on the carbon. The BRS OTS fan pulls the vapors through this treatment process and delivers it to the BRS OTS stack, from which it is vented to the atmosphere.

ACTIVATED CARBON ADSORPTION

Uses of Carbon

Granular activated carbon removes organic contaminants from the pH-adjusted distillate before it is recycled to the plant for reuse in various processes, such as agent hydrolysis, biological treatment, cooling towers, and the reverse osmosis feed for preparing water for boiler feed. As noted above, granular activated carbon is also used to remove organic contaminants in the BRS OTS that treats the gaseous effluent from the deaerator, evaporator, and crystallizer.

Distillate Carbon Filters

Two 7-foot-diameter filters in series will be used to remove organic compounds from the combined distillate. The filters normally will be operated in lead-lag fashion; that is, the system will be operated for a specified run time or until the control compound(s) or parameter (e.g., TOC) appears at a concentration higher than the treatment objective in the effluent of the second (lag) column in series. At that time, the carbon in the first (lead) filter is replaced with new carbon and this filter is then moved to the second (lag) position. Operation will be resumed until the effluent concentration from the lag column is again too high, and then the carbon replacement process is repeated.

The advantage of lead-lag operation comes from operation of the system until the target compound(s) appears in the effluent of the second column. If it were operated only until the target compound appears in the first column effluent, there would be no advantage to having two columns in series. Operating until the target compound appears in the effluent of the second column allows the carbon in the first column to be more fully utilized before it is replaced, and thus yields a lower carbon-usage rate to achieve the desired removal.

ISSUES RELATED TO THE WATER FLOW STREAM

The distillate carbon filters are the last line of defense controlling the quality of water to meet drinking water standards. If contaminants are not removed to the desired extent, or if the filters require excessive backwashing because of high suspended-solids concentration in the feedwater, the filters will fail. The composition of the combined distillate that is expected to enter the distillate carbon filters is given in Table 3-2.[3] This flow is made up of cooled distillate from the evaporator and condenser and the condensate from the BRS vent condenser. It is noted from Table 3-2 that the combined distillate contains 15 lbs/hr (230 ppm) of TOC and no suspended solids. The 15 lbs/hr is made up of 9.7 lbs/hr from the crystallizer and 5.3 lbs/hr from the evaporator. The origin of these numbers is not clear to the committee. It is the committee's understanding that the design of the carbon filters was based on the 15 lbs/hr TOC mass flow rate, but since composition and adsorbability of the TOC is not known, the committee does not know how long the carbon filters can be operated before carbon replacement is needed. The concentration of specific compounds of interest (target compounds) with respect to meeting drinking water standards and the concentration of adsorbable compounds that interfere with

[3]George Lecakes, Chief Scientist, PCAPP, "PCAPP's Water Recovery System and Brine Reduction System Briefing," presentation to the committee, May 1, 2012.

Copyright © National Academy of Sciences. All rights reserved.

TABLE 3-2 Mass Flow Rates for Combined Distillates to and from Brine Reduction System Distillate Activated Carbon Filters

Identification	Combined Distillate to BRS Distillate Carbon Filters, lb/hr (unless otherwise noted)	Combined Distillate from Activated Carbon Filters, lb/hr (unless otherwise noted)
Flow rate	65,100 (131 gal/min)	65,100 (131 gal/min)
Water	65,100	65,100
Calcium	0.0	0.0
Magnesium	0.0	0.0
Sodium	0.2	0.2
Potassium	0.0	0.0
Barium	0.0	0.0
Strontium	0.0	0.0
Ammonium	2.7	2.7
Ammonia	0.0	0.0
Iron	0.0	0.0
Bicarbonate	0.0	0.0
Carbonate	0.0	0.0
Carbon dioxide	0.0	0.0
Chloride	0.1	0.1
Sulfate	0.1	0.1
Nitrate	0.0	0.0
Phosphate	0.0	0.0
Silica	0.0	0.0
TOC	15.0	0.3
Hydroxide	2.6	2.6
Hydrogen	0.0	0.0
Suspended solids	0.0	0.0
TDS (by summation)	320 ppm	95 ppm
TSS (by summation)	0.0 ppm	0.0 ppm
Temperature	85.1°F	85.1°F
Specific gravity	0.996	0.996

SOURCE: Adapted from George Lecakes, Chief Scientist, PCAPP, "PCAPP's Water Recovery and Brine Reduction System Briefing," presentation to the committee, May 1, 2012. (Slide 38)

the adsorption of the target compounds is not known. Careful monitoring of the effluent quality from the carbon filters will be required to determine when the carbon must be replaced.

Table 3-2 shows that 2 percent of the influent TOC is not removed by the activated carbon, thereby leaving 4.6 ppm (0.3 lbs/hr) of TOC in the effluent. The original source of the information in Table 3-2 is not apparent.

The concentration of suspended solids in the combined distillate and the degree of microbial growth within the adsorber will determine the rate of pressure drop increase, which in turn will control the frequency of backwashing required to maintain an acceptable pressure drop through the filters. Microbial growth in the form of biofilms on the granular activated carbon (GAC) particles is expected because biodegradable organic matter will likely be in the combined distillate. While the organisms from the biotreatment process should have been killed at the temperatures of 100-plus°C in the evaporator and crystallizer, the microbes present will be those that grow within the adsorber. The GAC adsorbers are not sterile and will be populated by microbes that accumulate during shipping and installation. These microbes will grow on the biodegradable organic matter in the adsorber influent. The concentration of microbes in the adsorber effluent is controlled by the backwashing operation; the adsorber effluent will not be sterile, but the concentrations of microbes should not affect the in-plant use of the product water. Table 3-2 indicates that the mass flow rate of suspended solids is zero, but suspended solids could be present because of particles entrained in droplets, particularly from the crystallizer, and these particles will likely have biodegradable organic constituents that will serve as substrate for microbial growth in the adsorber. The committee does not know the concentration of these suspended solids, so the rate of increase of the pressure drop will have to be determined by monitoring.

Finding 3-1. Much uncertainty remains whether the product water from the distillate activated carbon filters of the PCAPP BRS will meet permit requirements. There is insufficient detail available on the composition of the total organic carbon in the filter influent water to determine with confidence what the effluent quality will be or what the rate of pressure drop increase will be.

Copyright © National Academy of Sciences. All rights reserved.

Review of Biotreatment, Water Recovery, and Brine Reduction Systems for the Pueblo Chemical Agent Destruction Pilot Plant

Recommendation 3-1. PCAPP operators should monitor the carbon filter effluent for compounds of concern and monitor the rate of increase of the pressure drop. If the effluent fails to meet permit requirements, it may be necessary to operate the carbon system for shorter periods of time before carbon replacement. If the rate of pressure drop increase is too large, the level of suspended solids in the influent may be reduced by modification to the crystallizer and/or more frequent backwashing.

Drinking Water Quality Requirement

The WRS-BRS product water will be recycled within the plant to limit well water withdrawals and reduce overall water use. All of the treated water will be recycled to the process water feed tanks to be used in the following processes: reverse osmosis membrane unit, the agent processing building, ICBs, and cooling towers. The recycled water will only be reused for non-potable water requirements in the plant. In order to maintain the existing permit to recycle the water, however, the effluent must meet primary drinking water standards[4] (as determined by quarterly monitoring and testing). Contaminants shown in Table 3-3 could potentially exceed primary drinking water standards, based on results from bench-scale experiments (BPT, 2005). While such concentrations in the effluent from the ICBs would be reduced by the BRS, it has not been demonstrated that they will be reduced to acceptable levels. If the water fails to meet drinking water standards, it cannot be reused and the plant would not meet the permit requirements for operation.

Finding 3-2. Drinking water standards were developed based on the need to protect public health; water that is recycled for non-potable use should not have to meet stringent drinking water standards. Furthermore, frequent testing for all regulated compounds would pose an unnecessary expense at PCAPP and may prevent any water reuse, based on the current permitting requirements.

Recommendation 3-2. PCAPP should renegotiate the permitting requirements and consider lesser requirements that are suitable for the intended use of the recycled water.

The Crystallizer

Although the quantity of water recovered from the crystallizer is much smaller than the quantity recovered from the evaporator, the quality of crystallizer condensate in terms of the concentration of TOC and suspended solids is a major factor in determining the quality of the combined distillate. The liquid in the crystallizer contains a high concentration of TOC and suspended solids.[5] Unless complete removal of droplets is achieved by the de-entrainment device in the crystallizer, the vent stream from the crystallizer will contain some TOC and suspended solids. The TOC in the design stream leaving the crystallizer is 9.7 lbs/hr. However, if the vapor contains as little as five-tenths of 1 percent of entrained drops by mass, then the TOC in the vapor will increase from 9.7 to 19.1 lbs/hr, and the suspended solids will increase to 9 lbs/hr. Therefore, the composition of the condensate from the crystallizer condenser is very important and should be monitored carefully. It is noted that the de-entrainment device is a chevron type, which is not as efficient as a mesh-type de-entrainment device. This is because the more efficient mesh type is more easily fouled. If the organic matter in the distillate proves to be a problem, then a more efficient device can be considered. The committee recognizes that fouling of the de-entrainment device would be increased and the washing frequency would have to increase.

Finding 3-3. The reported concentration of organic compounds and suspended solids in the PCAPP crystallizer distillate is uncertain and may not be achieved. If the concentration of organic compounds of concern is too high, the activated carbon replacement frequency may be too high. If the suspended solids concentration is too high, excessive backwashing of the carbon filter may be required.

TABLE 3-3 Contaminants of Potential Concern in the Brine Reduction System Effluent and Applicable Drinking Water Standards

Contaminant	Immobilized Cell Bioreactor Effluent, µg/L	Drinking Water Standard maximum contaminant level (MCL), µg/L
Inorganic		
Arsenic	25.5	10
Chromium	126	100
Lead	25	15[a]
Organic		
1,2 Dichloroethane	10.9	5
Benzene	17.2	5
1,1-Dichloroethene	16.6	7
Trichloroethylene	13.4	5
1,4-Dioxane	106	3.2[b]

[a]Federal action level: This is a concentration that triggers a remedial action if exceeded; it is not an MCL.
[b]Colorado action level; it is not an MCL.
SOURCE: BPT (2005), Tables 5-34 and 5-35.

[4]State of Colorado, Department of Public Health and Environment, Colorado Primary Drinking Water Regulations 5 CCR 1003-1: Primary Drinking Water Regulations, effective November 30, 2010, and Colorado Hazardous Waste Regulations 6 CCR 1007-3: Hazardous Waste, Part 261.24, Table 1—Maximum Concentrations of Contaminants for the Toxicity Characteristic, amended November 20, 2012, effective December 30, 2012.

[5]George Lecakes, Chief Scientist, PCAPP, "PCAPP's Water Recovery System and Brine Reduction System Briefing," presentation to the committee, May 1, 2012.

Copyright © National Academy of Sciences. All rights reserved.

Recommendation 3-3. The concentrations of the organic compounds and suspended solids in the distillate from the PCAPP crystallizer should be carefully monitored. If they prove to be unacceptably high, consideration should be given to upgrading the de-entrainment device in the crystallizer.

The Evaporator

Contamination of the distillate by entrained droplets should not be as serious for the evaporator as it is for the crystallizer, because the liquid concentration of TOC and suspended solids is much lower in the evaporator, and a higher-quality de-entrainment device is used to protect the compressor.

The Deaerator

Condensate from the vent condenser, which condenses steam leaving the deaerator, also contributes to the quality of the combined distillate. Contamination of the distillate by entrained droplets should be even less of a problem than it is for the evaporator, because the liquid concentration of TOC and suspended solids is much lower in the deaerator. The committee understands that provision has been made to use a high-quality de-entrainment device should it be required in the deaerator.

ISSUES RELATED TO THE GAS FLOW STREAM

The Air Emissions Review (Crown Solutions, 2010) shows that over 99 percent of the BRS air emissions come from the BC evaporator feed deaerator. Two Environmental Protection Agency computer models, Water8 and Water9, were used by Crown Solutions to estimate the air emissions originating from the deaerator.[6] There are large predicted differences between the two models, and the most conservative numbers were used in the design. The simplification used to model the deaerator as a stirred tank is a cause for concern. Some compounds will be condensed from the vapor stream into the liquid in the deaerator vent condenser. This removal of organics by condensation has been conservatively ignored in the design of the OTS carbon beds. Even so, the OTS carbon filters are predicted to last about a year before carbon replacement is necessary.

ISSUES RELATED TO THE SOLIDS FLOW STREAM

A primary issue relates to dewaterability of the solids by the belt filter. Inclusion of these solids in the filter cake is the easiest way to dispose of them. Organic matter, which is present in the ICB effluent and will carry through the WRS and BRS, is expected to affect the size of the inorganic crystals that form, and if these crystals are too small, they will not dewater well. Furthermore, biofilm that is released from the biotreatment system will remain in the filter cake and may adversely affect dewaterability. A water content of the belt filter cake of 3.6 percent has been reported,[7] which the committee believes to be unrealistically low. Accordingly, the water content will have to be measured after plant operations begin. If the water content is too high to allow shipping of the cake as a solid to a landfill, it may be necessary to ship it as a liquid.

Finding 3-4. The impact of organic matter on the water content of the filter cake from the PCAPP BRS is uncertain.

Recommendation 3-4. In the event that the filter cake cannot be sufficiently dewatered, PCAPP should have a contingency plan to ship it as a liquid to a facility licensed to accept it.

ISSUES RELATED TO THE ENTIRE BRS

The BRS for PCAPP will be a first-of-a-kind application because no plant exists that has treated a similar feed. While Veolia Water Solutions & Technologies, the BRS technology provider, is an experienced supplier of evaporation/crystallization plants and has several dozen plants in operation, the PCAPP WRS-BRS process will require a very high level of monitoring and operator intervention.

Finding 3-5. The BRS for PCAPP will be a first-of-a-kind system because a similar feed has never been treated before. The PCAPP WRS-BRS process will require a high level of monitoring and operator intervention.

Recommendation 3-5. PCAPP should enlist Veolia Water Solutions & Technologies, the BRS technology provider, for onsite assistance during systemization (start up), initial operation, and operator training.

Finding 3-6. Given that the biotreatment system has not been tested at full scale, the composition and concentrations of organic and inorganic compounds entering the PCAPP BRS are unknown.

Recommendation 3-6. PCAPP should conduct careful monitoring of the feed stream to the BRS and the combined distillate for compounds of concern during start up and initial operation of the plant. As yet unidentified compounds may be present in the feed to the BRS that will have a disproportionately high impact on the vent stream from the deaerator and on the operation of the vent condenser of the off-gas treatment system.

[6]Additional information is available at http://www.epa.gov/ttnchie1/software/water/water9_3/index.html. Accessed January 17, 2013.

[7]George Lecakes, Chief Scientist, PCAPP, "PCAPP's Water Recovery System and Brine Reduction System Briefing," presentation to the committee, May 1, 2012.

Copyright © National Academy of Sciences. All rights reserved.

Review of Biotreatment, Water Recovery, and Brine Reduction Systems for the Pueblo Chemical Agent Destruction Pilot Plant

Finding 3-7. Acid hydrolysis of biomass could occur upon H_2SO_4 addition prior to the deaerator. This could result in the solubilization of organic compounds such as proteins and fatty acids, leading to foaming, higher loading to the GAC, and, eventually, less effective dewatering.

Recommendation 3-7. If biomass solubilization becomes a problem for downstream processing, PCAPP should consider adding a clarifier between the ICBs and the WRS-BRS.

REFERENCES

BPT (Bechtel Pueblo Team). 2005. Test Report for Bench-Scale Evaluation of HT, HD, and Energetics Hydrolysis and Biotreatment. Pueblo, Colo.: Bechtel.

Crown Solutions Co., LLC. 2010. Air Emissions Review for BRS Distillate and BRS OTS Systems, Equipment Numbers MK-B12-0002 A/B/C (Distillate) and MK-B12-0001 A/B/C (OTS). 943-CS-003. Vandalia, Ohio: Crown Solutions Co., LLC.

State of Colorado. 2010. Colorado Primary Drinking Water Regulations 5 CCR 1003-1: Primary Drinking Water. Effective November 30, 2010. Department of Public Health and Environment. Available at http://www.sos.state.co.us/CCR/Welcome.do. Accessed April 24, 2013.

State of Colorado. 2012. Colorado Hazardous Waste Regulations 6 CCR 1007-3: Hazardous Waste. Amended November 20, 2012, Effective December 30, 2012. Department of Public Health and Environment. Available at http://www.sos.state.co.us/CCR/Welcome.do. Accessed April 24, 213.

Veolia Water Solutions & Technologies. 2010. Bench Scale Evaporation of Waste Brine and Filter Testing. Plainfield, Ill.

Veolia Water Solutions & Technologies. 2012. Start-up and Operating Manual, System Brine Reduction System (BRS) Pueblo Chemical Agent-Destruction Pilot Plant (PCAPP) Project. 55019650-OP. Plainfield, Ill.

Copyright © National Academy of Sciences. All rights reserved.

4

Materials of Construction Review

MATERIALS OF CONSTRUCTION FOR THE BIOTREATMENT, WATER RECOVERY, AND BRINE REDUCTION SYSTEMS

Overview

The biotreatment, water recovery, and brine reduction systems (WRS-BRS) include a large number of different items that are constructed from a wide spectrum of materials, including carbon steel, high nickel alloys, fiber-reinforced plastic (FRP), epoxy coated carbon steel and titanium, and austenitic and duplex stainless steels, the latter two being used extensively. A list the materials of construction (MOCs) for the major pieces of equipment used in the WRS-BRS, along with MOCs used in some other PCAPP equipment, is given in Appendix A. The vendor's MOC listing for the biotreatment system is given in Table 4-1.

The committee did not identify any obviously inappropriate MOC selections, in the limit of the information that was provided other than that the biotreatment steam supply piping is coated with a paint system rated for 120°F maximum (see footnote to Table 4-1). This piping will operate above this temperature.

Finding 4-1. The materials of construction selected for the PCAPP biotreatment and WRS-BRS process equipment appear to be generally appropriate for the service conditions anticipated, based on the information available to the committee.

The committee cannot rule out corrosion problems, particularly if transient events lead to extreme off-normal conditions. Large portions of the equipment surfaces are exposed to high chloride ion concentrations. Combined with elevated temperatures, this presents highly corrosive conditions, even though the liquid stream is above pH 7 during much of the process. Stress corrosion cracking may also occur, even though many of the materials are resistant to, but not immune from, this mode of failure.

Finding 4-2. The combination of high chloride concentrations and elevated temperatures creates highly corrosive conditions, even when the pH is above 7.

The diversity of materials may present issues when repairs are required because the methods for repairs and replacements differ for various MOCs. For example, welding methods and filler metals for austenitic stainless steels (the 300-series stainless steels) are very different from those used for duplex stainless steels. Nickel alloys require yet different methods.

Finding 4-3. The methods for repairs and replacements differ for various materials of construction. Therefore, the diversity of materials used in the PCAPP biotreatment system and WRS-BRS may present issues pertaining to material logistics and appropriate craftsmen skills when repairs are required.

Heat transfer surfaces are especially vulnerable to attack. Furthermore, the possibility of forming deposits on some surfaces was noted.[1] These deposits may be precipitated solids from the process fluids or corrosion products from upstream equipment. Such deposits act as a shield that creates a stagnant condition under the deposit. They also insulate the surface and can lead to higher metal temperatures. The dissolution of metal in the crevice under the deposit causes an increase in positively charged metal ions. This charge is balanced by the migration of chloride ions into the crevice. The metal chloride that forms then hydrolyzes to form insoluble metal hydroxides plus HCl, thereby lowering the pH in the crevice (pH ~2 to 4). This promotes further metal dissolution, which results in a rapidly accelerating autocatalytic process of metal attack. PCAPP staff have emphasized the desirability of frequent cleaning to remove deposits.[2]

[1]George Lecakes, Chief Scientist, PCAPP, "PCAPP's Water Recovery System and Brine Reduction System Briefing," presentation to the committee, May 1, 2012.

[2]Ibid.

Copyright © National Academy of Sciences. All rights reserved.

TABLE 4-1 PCAPP Biotreatment Area Materials of Construction

Area of System	Material of Construction	Coating
Biological Treatment System (BTS)		
BTS air feed piping	Carbon steel	Exterior paint[a]
25% caustic piping	Carbon steel	Exterior paint[a]
Steam supply piping	Carbon steel	Exterior paint[a]
Immobilized cell bioreactor (ICB) tank	Carbon steel	Interior[a]/exterior paint[a]
Feed tank	Carbon steel	Interior[a]/exterior paint[a]
Effluent tank	Carbon steel	Interior[a]/exterior paint[a]
Feed tank agitator	Carbon steel with 2205 stainless mixer, shaft, and blade	Motor/mounting painted (vendor standard)
Feed tank catwalk grating	Carbon steel	Galvanized
ICB catwalk grating and stairs	Carbon steel	Galvanized
Equipment skids	Carbon steel	Exterior paint[a]
Pump materials	CD4MCuN	Exterior paint (vendor standard)
Moisture separator	304 Stainless steel	None
Undiluted hydrolysate piping	Carbon steel	Exterior paint[a]
Diluted hydrolysate piping	PVC Schedule 80[b]	None
Biologically treated hydrolysate piping	PVC Schedule 80[b]	None
Process water piping	PVC Schedule 80[b]	None
Reverse osmosis reject piping	CPVC Schedule 80[b]	None
Nitrogen nutrient piping	CPVC Schedule 80[b]	None
Phosphate nutrient piping	CPVC Schedule 80[b]	None
Off-gas treatment system piping prior to moisture separator	CPVC Schedule 80 [b]/carbon steel	None
Off-Gas Treatment System (OTS)		
Carbon filter (granulated activated carbon)	Carbon steel	Exterior and interior epoxy urethane (vendor standard)
OTS piping after moisture separator	Carbon steel	Exterior paint[a]
OTS fan	SAE 960X steel wheel	Exterior paint (vendor standard)
OTS fan exhaust stack	Carbon steel	Exterior paint[a]

[a] Sherwin-Williams Phenicon® HS Epoxy coating system to be applied to interior and exterior of equipment per Golder Cleaning and Coating Procedures (2485-V1A- MS00-0044s01).

[b] Polyvinyl chloride (PVC) and chlorinated PVC (CPVC) shall be insulated for ultraviolet protection.

SOURCE: PCAPP responses to committee questions submitted January 16, 2013, dated January 24, 2013; specification table originates from Golder Associates.

Finding 4-4. Heat transfer surfaces are vulnerable to corrosion, especially under deposits. The need for surfaces of the PCAPP biotreatment system and the WRS-BRS to be frequently cleaned to remove deposits has been recognized by PCAPP staff.

Recommendation 4-1. Standard operating procedures should be implemented to ensure that appropriate surface cleaning is performed regularly for the PCAPP biotreatment system and the WRS-BRS.

Corrosion Monitoring

The biotreatment, WRS, and BRS equipment is already installed, and, as previously mentioned, the committee has not identified any inappropriate materials selections. The materials in these units may well perform suitably if such considerations as operational stresses, fluid velocities, and area ratios of galvanic couples are properly managed. However, the composition of the liquid stream is unique and leads to uncertainties in the rate at which corrosion can occur over the 4- to 5-year span during which the plant is intended to operate. Thus, the committee believes that an appropriate course of action for the PCAPP operators is to focus on creating rigorous corrosion-monitoring (testing and inspection) and maintenance protocols for these units during systemization and use these protocols during operations.

Finding 4-5. Properly designed and implemented protocols to monitor the occurrence of corrosion in components of the PCAPP biotreatment system and WRS-BRS enables the identification of problems before equipment failures occur. This provides a basis to select alternative materials if the original selections prove to be inadequate or modify operating practices to minimize the corrosion risk.

PCAPP has developed a corrosion-monitoring plan for tank systems regulated under the Resource Conservation and Recovery Act that uses visual inspection of the exterior surfaces, document reviews, ultrasonic nondestructive inspections, and calculation of corrosion rates and remaining life (BPT, 2012). However, it does not incorporate any cor-

Copyright © National Academy of Sciences. All rights reserved.

rosion testing methods, nor does it include visual inspection of the interior surfaces. Titanium equipment and piping are excluded from monitoring on the basis that this material is unlikely to corrode during the time that the system is in use. Also, heat exchangers are not included in this plan, and there are no plans to develop a plan for this equipment.[3]

The committee has concerns with the proposed corrosion-monitoring plan. Ultrasonic nondestructive testing can detect changes in wall thickness from general corrosion or cracking, but it is not reliable for detecting pitting, which may be the most likely form of corrosion in this system. Reliance on exterior visual inspection will not warn of damage until the equipment wall has been penetrated. Internal visual inspection of the equipment when it is out of service between destruction campaigns[4] could reduce the probability of unexpected failure. Use of one or more of the corrosion-monitoring techniques described below would further reduce the chance of unexpected failure.

The absence of a corrosion-monitoring plan for heat exchangers is an even greater concern. The heat transfer surfaces are thin and operate at the highest temperatures. The probability of fouling has already been identified. These heat transfer surfaces are vulnerable to pitting and crevice corrosion attack under deposits. Even a small pinhole leak in one of these heat exchangers would shut down the system. As a minimum, the heat transfer surfaces should be inspected by a boroscope or comparable device whenever possible. Titanium surfaces should be included in the corrosion-monitoring plan.

Finding 4-6. The proposed tank corrosion-monitoring plan for PCAPP relies on ultrasonic inspection and external visual inspection. This approach would provide no warning of pitting attack prior to wall penetration. Internal visual inspection of the equipment when it is out of service between destruction campaigns would reduce the probability of such failures.

Finding 4-7. No corrosion-monitoring plan has been developed for equipment other than for tanks. Equipment items other than tanks, especially heat exchangers, are vulnerable to attack—to pitting and crevice corrosion attack in particular. Even a small leak could shut down a system having such equipment and, potentially, the entire PCAPP facility. A corrosion-monitoring plan for such equipment is required.

Recommendation 4-2. An inspection plan for the internal surfaces of tanks beyond the use of ultrasonic monitoring should be developed. The committee strongly recommends that PCAPP develop a corrosion-monitoring plan for equipment other than tanks that includes, as a minimum, internal inspection and corrosion testing of all equipment, including that made of titanium. This plan should include provisions for detecting general corrosion, pitting/crevice corrosion, and stress corrosion cracking.

Recommendation 4-3. A corrosion-monitoring program for the PCAPP ICBs and WRS-BRS should include the following:

- Corrosion monitoring conducted on an ongoing basis to identify corrosion problems and to provide data for selecting alternative materials. This may require using non-standard monitoring methods for the heat transfer surfaces.
- Nondestructive testing of the equipment and piping on a scheduled basis, with special attention given to heat transfer surfaces.

The creation and implementation of a comprehensive monitoring program will require the full support from PCAPP management. This would involve making provisions for the added time and expense incurred in performing corrosion monitoring to be accounted for in the rewards system under which the site operations contractor works. Unless such top-level buy-in occurs, it is unlikely that a corrosion-monitoring program will be successfully implemented because many distractions may take priority during day-to-day operations in a complex plant such as PCAPP. The consequences of failing to implement a corrosion monitoring program could be serious, including the possibility of structural failures, with consequent impacts on safety and the environment, and of operational failures with impacts on cost and schedule. Agarwala and Ahmad (2000) report that "a major portion of the lifecycle cost for all platforms and infrastructures is due to labor hours spent in finding the problems and then fixing them with either a major overhaul or extensive part replacement" (p. 1). They found that a monitoring program could save up to 30 percent of the total cost.

Finding 4-8. Historic evidence finds that the use of a monitoring program saves up to 30 percent of the total costs.

Recommendation 4-4. The Assembled Chemical Weapons Alternatives program leadership and PCAPP site contractor management should strongly support implementation of a comprehensive corrosion-monitoring program. This should be a priority.

CORROSION-MONITORING METHODS

As an element of an enterprise's asset management activities, an important role of corrosion monitoring is to focus efforts toward preventive and predictive maintenance,

[3]Teleconference between George Lecakes, Chief Scientist, PCAPP, and the committee on September 17, 2012.

[4]There typically are scheduled downtimes during which the equipment is recalibrated and reconfigured to process a different type of munition. A *campaign* refers to operations relating to a particular type of munition and/or a particular type of agent.

Copyright © National Academy of Sciences. All rights reserved.

and away from more costly corrective maintenance practices (Tullmin and Roberge, 2000). The following sections describe common methods of monitoring corrosion in equipment MOCs.

Use of Metallic Coupons

Using metallic coupons in a rack is the simplest and most common corrosion testing method used in plant facilities. These coupons are placed in a rack at selected locations in the processing equipment throughout the plant where they are exposed to the feed stream and are periodically examined to measure the corrosion. These coupons typically include the materials used in the process equipment and other materials with greater corrosion resistance that might be selected if the chosen materials prove to be inadequate. Frequently, duplicate coupons are included to provide greater confidence in the results. This test has the advantage that many materials can be tested at the same time, and it is fairly inexpensive.

Crevice corrosion tendencies can be detected by using specially designed washers on the coupons. Welded samples can be included to determine if weld or weld heat-affected zone corrosion is a problem, and stressed samples can be used to detect stress corrosion cracking.

Disadvantages to using coupons include not detecting changes in corrosiveness with time and not detecting heat transfer effects. Also, the plant must be shut down to gain access to the coupons for examination. This disadvantage can be overcome by using retractable coupon holders. NACE International and ASTM International have issued standard practices for conducting these tests. See Appendix B for a listing of the NACE and ASTM standard practices and guides and other sources of materials.

Electrical Resistance Probes

Electrical resistance probes may also be used to measure corrosion in process equipment. These probes are specially designed corrosion coupons. The corrosion rate is calculated from the change in electrical resistance rather than from mass loss. These measurements are made by installing a wire or tube fabricated of the material in question in such a way that the electrical resistance can be conveniently measured. Corrosion reduces the cross section of the probe; therefore, its electrical resistance will increase with time if corrosion is taking place. A temperature-compensating element should be incorporated into the probe, since changes in temperature also influence the resistance. Electrical resistance probes measure the average remaining metal thickness.

To obtain a corrosion rate, a series of measurements are made over time, and the results are plotted as a function of exposure time. The corrosion rate can be determined from the slope of this plot. Commercial electrical resistance equipment is readily available from a number of vendors. Measurements can be made with portable devices or the probes can be hard-wired to a control room system. In the latter case, readings can be taken automatically and the results converted to corrosion rates via software.

There are some disadvantages to using electrical resistance probes. Vessel or piping walls must be penetrated to install the probes, and this provides an opportunity for creating leaks. Short time duration between readings can result in erroneous rate calculation if the corrosion rate is low. Additionally, the method provides no information on localized corrosion, which is the most likely mode of attack in this process.

Polarization Resistance Measurement

Polarization resistance measurement methods provide an estimate of the corrosion rate. Polarization resistance is an electrochemical (current) response to an imposed driving force (an electrochemical potential). This method is based on the Stern-Geary equation (Stern and Roth, 1957). The theory behind this technique is based on the corrosion rate of a probe being inversely proportional to its polarization resistance, that is, the slope of the potential-current response curve near the steady state corrosion potential as shown in Figure 4-1. As the slope increases, the corrosion rate decreases.

The probe electrodes are fabricated of the material being tested. An electronic power supply polarizes the specimen about 10 mV from the corrosion potential. The resulting current is recorded as a measurement of the corrosion rate. This method yields an instantaneous estimate of the corrosion rate (Dean and Sprowls, 1987). A typical three-electrode polarization resistance probe is shown in Figure 4-2.

Polarization resistance measurement has some of the same disadvantages as electrical resistance probes: (1) the wall of the equipment must be penetrated, and (2) this method does not indicate localized corrosion.

Some practitioners have found that changes in corrosion potential are a useful indicator of pitting tendencies.[5] Increases in the corrosion potential toward the transpassive region are an indication of possible breakdown of the passive layer on stainless steels or nickel alloys. Measuring the corrosion potential requires the use of a stable reference electrode in the process stream, and such electrodes are available.

Electrochemical Noise

The electrochemical noise methodology for measuring corrosion involves the measurement of electrochemical noise produced by the corrosion process. This is accomplished by the following:

- Measuring potential noise by monitoring the potential difference between two electrodes, or

[5]Personal communication between S.W. Dean, Engineer (retired), and committee member Robert Puyear, via telephone, on May 14, 2012.

Copyright © National Academy of Sciences. All rights reserved.

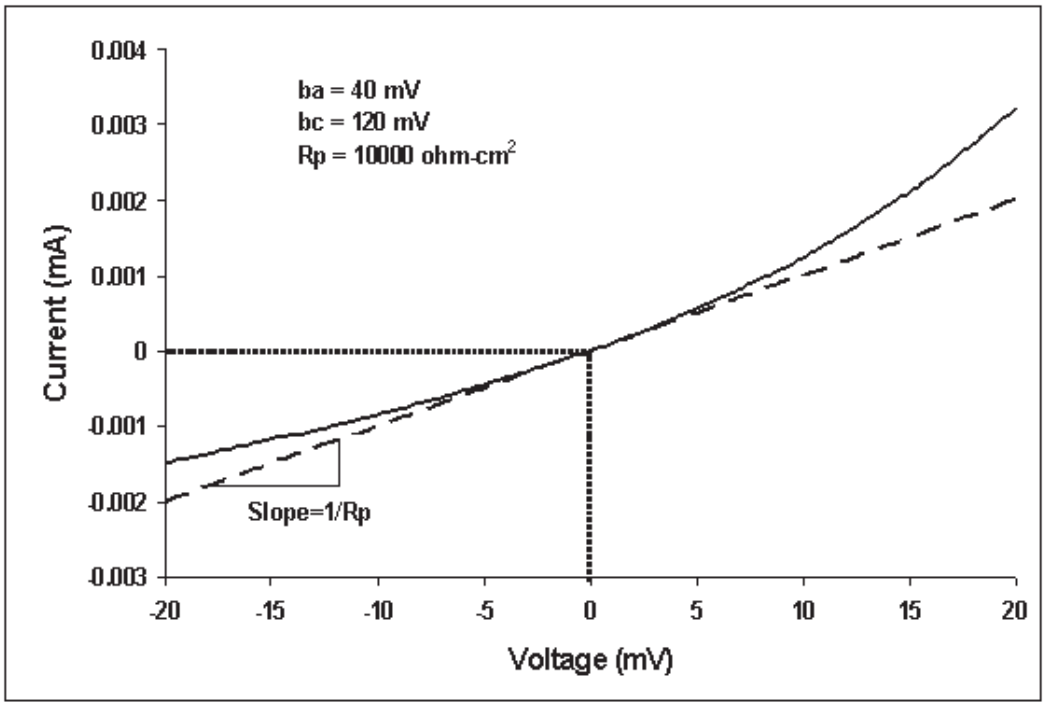

FIGURE 4-1 A typical electrical resistance probe. SOURCE: Reprinted with permission of the American Water Works Association from the 1995 Water Quality Technology Conference; permission conveyed through Copyright Clearance Center, Inc.

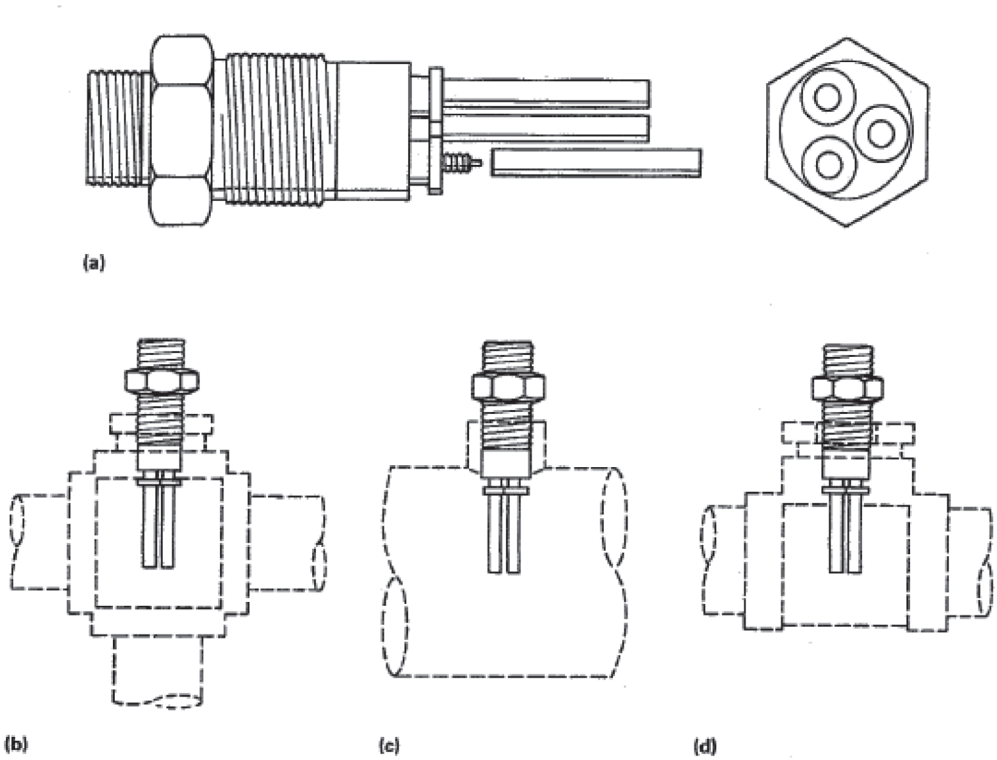

FIGURE 4-2 Three-electrode polarization resistance probe (a) and schematics of installation of the probe in pipe fitting (b), in a welded line (c), and in a pipe tee (d). SOURCE: Dean and Sprowls (1987). Reprinted with permission of ASM International. All rights reserved. www.asminternational.org.

Copyright © National Academy of Sciences. All rights reserved.

Review of Biotreatment, Water Recovery, and Brine Reduction Systems for the Pueblo Chemical Agent Destruction Pilot Plant

- Measuring current noise by monitoring current fluctuations of two identical shorted electrodes by using a zero resistance ammeter, or
- Using both of the above methods.

The potential and/or current signals are compared to provide information on the corrosion process (type of corrosion, time of corrosion initiation, and, in some instances, corrosion rate). Electrochemical noise was originally designed to monitor localized corrosion, such as pitting and crevice corrosion (Agarwala and Ahmad, 2000). ASTM has developed a guide for conducting electrochemical noise tests (ASTM G199-09, 2009). This guide covers the procedure for conducting online corrosion monitoring of metals by this technique, which can be used to detect localized corrosion activity and to estimate corrosion rate on a continuous basis without removal of the monitoring probes. The ASTM guide also provides some generally accepted methods of analysis that are useful in interpreting test results. A detailed discussion of electrochemical noise measurement and signal analysis is beyond the scope of this report, but some of the basic principles are discussed by Roberge and Klassen (2000). Examples of the application of electrochemical noise measurements in the solution of engineering problems are presented in papers by Lawson et al. (2000), Wharton et al. (2000), and Goeller et al. (2000).

Other Considerations Relevant to Corrosion Monitoring

A number of other testing methods are available. Bypass loops can be used to test corrosion on heat transfer surfaces. The bypass stream is passed through a small heat exchanger where the tubes are the test samples. Visual inspection of both the exterior and internal surfaces should be conducted on a planned schedule and whenever an opportunity is presented, such as an unplanned or routine maintenance shutdown. Boroscopes are very useful for examining the interior of heat exchanger tubes and critical piping elements. Ultrasonic thickness measurement is a useful tool for detecting changes in wall thickness. Base-line thickness readings should be taken before the equipment is put into service, and the location of the readings should be clearly marked on the equipment. Subsequent readings can be taken at these same points over time to detect metal loss.

Whatever inspection techniques are used, it is critical that complete records are made and maintained. These records, along with the results of the corrosion-monitoring program, provide information critical to decisions about equipment repair or replacement.

By itself, corrosion monitoring data has a relatively low utility. Its value comes when it is incorporated into the plant's information system and integrated with inspection data, operational parameters, failure statistics and analysis reports, maintenance records, and process chemistry data.

REFERENCES

Agarwala, V.S., P.L. Reed, and S. Ahmad. 2000. Corrosion Detection and Monitoring—A Review. Houston, Tex.: NACE International.

ASTM (American Society for Testing and Materials). 2009. ASTM G 199-09 Standard Guide for Electrochemical Noise Measurement. West Conshohocken, Pa.: American Society for Testing and Materials.

BPT (Bechtel Pueblo Team). 2012. Corrosion Monitoring Plan for RCRA Tank Systems. 24852-RD-30G-000-V0001, Rev. 00C. Pueblo, Colo.: Bechtel.

Dean, S.W., and D.O. Sprowls. 1987. In-Service Monitoring. P. 200 in Metals Handbook, Volume 13: Corrosion; Corrosion Testing and Evaluation. Metals Park, Ohio: ASM International.

Goellner, J., A. Burkert, A. Heyn, J. Hickling, and H.U. Volger. 2000. Using Electrochemical Noise to Obtain More Information from Conventional Corrosion Test Methods. Houston, Tex.: NACE International.

Lawson, K., G.E.C. Bell, and G. L. Edgemon. 2000. Integrity Management Utilizing Electrochemical Noise—Practical Experience. Houston, Tex.: NACE International.

Roberge, P.R., and R.D. Klassen. 2000. Electrochemical Noise Analysis for Corrosivity Assessment. Houston, Tex.: NACE International.

Stern, M., and R.M. Roth. 1957. Anodic behavior of iron in acid solutions. Journal of the Electrochemical Society 104(6):390-392.

Tullmin, M.A., and P.R. Roberge. 2000. Monitoring Corrosion in Aging Systems—New Possibilities and Old Fundamentals. Houston, Tex.: NACE International.

Wharton, J.A., B.G. Mellor, R.J.K. Wood, and C.J.E. Smith. 2000. Crevice Corrosion Studies Using Electrochemical Potential Noise Measurements. Houston, Tex.: NACE International.

Copyright © National Academy of Sciences. All rights reserved.

Appendix A

Table of Materials of Construction

TABLE A-1 Materials of Construction for Major Components of the PCAPP Biotreatment, Water Recovery, and Brine Reduction Systems and Certain Other Equipment

Equipment Description	Number	Material selected	pH	Chloride, ppm (or percent when noted)	Sulfate, ppm	Temp, °F
Washed agent and water surge drums	MV-B02-0101, etc.	Titanium, grade 2		5.9%		100
Washed agent and water surge piping		Titanium, grade 2		5.9%		100
Agent-water separator tanks	MV-B04-0001, etc.	Titanium, grade 7		5.9%		100
Agent-water piping		Titanium, grade 2		5.9%	2.65% sulfur	100
Washed agent and water booster pumps	MP-B02-0101A/B	Wetted parts Hastelloy C		Note: Chlorine and sulfur essentially totally in organic phase		
Munition washout station (MWS) wash water collection tanks	MV-B04-0001A/B, etc.	Titanium, grade 2	>5	<1	<1	100
MWS wash water piping		Titanium, grade 2	>5	<1	<1	100
Wash water pumps	MP-B04-0105A/B, etc.	Wetted parts Titanium, grade 2	>5	<1	<1	100
Collected wash water pumps	MP-B04-0105A/B, etc.	Wetted parts Titanium, grade 2	>5	<1	<1	100
Agent hydrolyzer tanks	MV-B04-0102, etc.	Titanium, grade 7	<1 to 12	3.8%	<1	200
Agent hydrolyzer piping		Titanium, grade 2 or grade 7	<1 to 12 primarily organic phase; water contamination	3.8%	<1	200
Agent concentrate pumps	MP-B04-0002A/B	Wetted parts PTFE	<1 to 12	44% 20% sulfur	<1	200
Agent hydrolyzer recirulation pumps	MP-B04-0103A/B	Wetted parts Titanium, grade 7	<1 to 12	3.8%	<1	200
In-line static mixers	MF-B04-0102, etc.	Titanium, grade 7	<1 to 12	3.8%	<1	200
In-line steam mixers	MF-B04-0105, etc.	Titanium, grade 7	<1 to 12	3.8%	<1	200
Agent hydrolysate hold tanks	MV-B04-0103, etc.	Carbon steel	12	3.8%	<1	200
Agent hydrolysate piping		Carbon steel	12	3.8%	<1	200
Agent hydrolysate pumps	MP-B04-0104A?B, etc.	Wetted parts stainless steel	12	3.8%	<1	200
Agent hydrolysate samplers	ML-B04-0101, etc.	Piping and valves stainless steel	12	3.8%	<1	200

continued

Copyright © National Academy of Sciences. All rights reserved.

TABLE A-1 Continued

Equipment Description	Number	Material selected	pH	Chloride, ppm (or percent when noted)	Sulfate, ppm	Temp, °F
30-day storage tanks	MT-B04-0101, etc.	Carbon steel	12	3.8%	<1	100
30-day storage tank piping		Carbon steel	12	3.8%	<1	100
Bioreactor transfer pumps	MP-B04-0106A?B, etc.	Wetted parts 316L stainless steel	12	3.8%	<1	100
Agent hydrolysate air cooler	ME-B04-0004	Carbon steel	12	3.8%	<1	100
Spent decon holding tank piping	MV-B05--101 MV-B05-0201	Type 316L ss	8	2%	<1	90
Spent decon feed pumps	MP-B05-0101A/B, MP-B05-0201A/B	Wetted parts 316L ss	8	2%	<1	90
Sumps	MT-B05-0040, etc.	Carbon steel	7	<1	<1	80
Immobilized cell bioreactor (ICB) feed tanks	MT-B09-0101, etc.	Carbon steel				
ICB feed pumps	MP-B09-0101, etc.	Wetted parts CD4MCu				
Brine concentrate (BC) evaporator	MV-B12-0002	AL6XN	6.0-7.5	33,236.9	45,145.9	209
BC vapor washer	MV-B12-0004	Duplex SS 2101	6.0-7.5	1.72	3.42	210
BC evaporator feed deaerator	MV-B12-0001	Duplex SS 2205	5.0-5.5	4,353.7	5,913.7	212
BC feed preheater	ME-B12-0001 A/B/C/D/E/F/G/H/I/J	TI Gr 2 Tubes, Duplex 2205 tubesheets, 316Lss shell	5.0-5.5 tube side	4,353.7	5,913.7	207
BC evaporator distillate tank	MT-B12-0003	Type 316L ss	6.0-7.5	0	1.688	217
Crystallizer	MV-B12-0006	Inconel 625	7.0-8.0	46,861	52,890	225
Crystallizer heater	ME-B12-0004	Shell 316L ss, Liquor boxes Inconel 625, tubes Gr 2 Ti	7.0-8.0	62,307	54,639	225
Crystallizer surface condenser	ME-B12-0005	Type 316L ss tubes and tube sheet	6.0-7.5	14	14	225
Brine reduction system (BRS) vent condenser	ME-B12-0006	Type 316L ss shell and tubes	6.0-7.5	0	0	212.7
Crystallizer steam condensate tank	MT-B12-0004	Type 316L ss	6.0-7.5			
Crystallizer feed tank	MT-B12-0004	Inconel 625	7.0-8.0	46,632	52,633	213
BC evaporator feed tank	MT-B12-0001	Fiber-reinforced plastic, Derakane 411 resin	6.9-5.6	4,353.7	5,913.7	102
BRS distillate cooler	MT-B12-0001	Frame C steel, plates 316L ss	6.0-7.5			
BRS sulfuric acid tank	ME-B12-0003	C Steel	−1.3			
BRS distillate carbon filter feed tank	MT-B12-0009	Type 316L ss	6.0-7.5	0	0	237
BRS area sump liner	MT-B12-0009	AL6XN	5.5-9.0			
Filter building sump liner	MT-B12-0018	Epoxy-coated C Steel	7.0-8.0			
BRS off-gas treatment system (OTS) stack	MT-B12-0021	Fiber-reinforced plastic		1.54	1.54	85
BRS belt filter air receiver		C Steel				
BRS distillate carbon filters A/B/C	MK-B12-0002A/B/C	SA-516 GR 70 C Steel	6.0-7.5	1.55	1.55	85
BRS OTS carbon filters A/B/C	MK-B12-0001A/B/C	Type 304L ss		1.54	1.54	85
BRS OTS entrainment separator	PY-B12-0004	Sch 10 316L pipe		1.54	1.54	85
BRS OTS heater	ME-B12-0007	Housing 316L ss, Heating element Incoloy 800		1.54	1.54	85
BRS OTS fan	ME-B12-0007	C steel		1.55	1.55	85
BC evaporator vapor compressor	MC-B12-0001	Duplex 2507 impeller, 316L casing		0.000	1.712	287

continued

Copyright © National Academy of Sciences. All rights reserved.

TABLE A-1 Continued

Equipment Description	Number	Material selected	pH	Chloride, ppm (or percent when noted)	Sulfate, ppm	Temp, °F
BRS belt filter	MC-B12-0001	Wetted parts Hastelloy C-276, belt support grating Inconel 625	7.0-8.0	62,307	54,639	150
BC evaporator recirculation pump	ML-B12-0001	CD4MCu	6.0-7.5			
Crystallizer recirculation pump	MP-B12-0002	Inconel 625	7.0-8.0			
BC evaporator feed pump	MP-B12-0006	CD4MCu	5.0-5.5			
BC evaporator distillate pump	MP-B12-0001	Type 316 ss	6.0-7.5			
BC vapor washer recirculation pump	MP-B12-0003	CD4MCu	6.0-7.5			
Crystallizer feed pump	MP-B12-0004	Inconel 625	7.0-8.0	46,632	48,495	213
BRS steam condensate pump	MP-B12-0005	Type 316 ss	6.0-7.5			
BRS belt filter feed pump	MP-B12-0007	Inconel 625	7.0-8.0			
BRS distillate carbon filter feed pump	MP-B12-0008	Type 316L ss	6.0-7.5			
BRS area sump pump	MP-B12-009A/B	CD4MCu	5.5-9.0			
BRS filter area sump pump	MP-B12-0018A/B	CD4MCu	5.5-9.0			
BC evaporator feed tank agitator	MP-B12-0019	Duplex SS 2205	5.0-5.5			
Crystallizer feed tank agitator	MF-B12-0001 MF-B12-0004	Inconel 625	7.0-8.0	46,632	45,193	213

SOURCE: George Lecakes, PCAPP's Water Recovery System and Brine Reduction System Briefing, May 1, 2012, and Start-up and Operating Manual, "Brine Reduction System (BRS) Pueblo Chemical Agent Destruction Pilot Plant (PCAPP) Project, 55019650-OP" (undated) and 24852-RD-30G-000-V0001 Revision 00C, September 2012, "Corrosion Monitoring Plan for Resource Conservation and Recovery Act (RCRA) Tank System."

Copyright © National Academy of Sciences. All rights reserved.

Appendix B

Corrosion-Monitoring Guides and Testing Materials Suppliers

STANDARDS AND GUIDES FOR CORROSION MONITORING

NACE Standard RP0497-2004, "Standard Recommended Practice Field Corrosion Evaluation Using Metallic Test Specimens," NACE International, Houston, Texas

NACE SP0690-2009, "Standard Practice, Standard Format for Collection and Compilation of Data for Computerized Material Corrosion Resistance Database Input," NACE International, Houston, Texas

ASTM G4 (latest revision), "Standard Guide for Conducting Corrosion Tests in Field Applications," ASTM, West Conshohocken, Pennsylvania

ASTM G 78 (latest revision), "Standard Guide for Crevice Corrosion Testing of Iron-Base and Nickel-Base Stainless Alloys in Seawater and Other Chloride-Containing Aqueous Environments," ASTM, West Conshohocken, Pennsylvania

ASTM G 46 (latest revision), "Standard Guide for Examination and Evaluation of Pitting Corrosion," ASTM, West Conshohocken, Pennsylvania

ASTM G 1 (latest revision), "Standard Practice for Preparing, Cleaning, and Evaluating Corrosion Test Specimens," ASTM, West Conshohocken, Pennsylvania

SUPPLIERS OF TESTING SAMPLES

Metal Samples Corrosion Monitoring Systems, P.O. Box 8, 152 Metal Samples Road, Munford, Alabama

Copyright © National Academy of Sciences. All rights reserved.

Appendix C

Biographical Sketches of Committee Members

Robert A. Beaudet, *Chair*, is an independent consultant and Professor Emeritus of Chemistry who recently retired from the faculty of the University of Southern California, where he has served continuously in the Department of Chemistry since 1962. He received his Ph.D. in physical chemistry from Harvard University in 1962. Most of his academic career has been devoted to research in molecular structure and molecular spectroscopy. From 1961 to 1962, he was a U.S. Army officer and served at the Jet Propulsion Laboratory as a research scientist. Dr. Beaudet since has served on Department of Defense committees addressing both offensive and defensive considerations surrounding chemical warfare agents. He was chair of an Army Science Board committee that addressed chemical detection and trace gas analysis. He was also the chair of an Air Force technical conference on chemical warfare decontamination and protection. He has participated in two NRC studies on chemical and biological sensor technologies and energetic materials and technologies. Previously, Dr. Beaudet served as a member of the National Research Council's (NRC's) Board on Army Science and Technology (BAST), as a member of the NRC Committee on Review of the Non-Stockpile Chemical Materiel Disposal Program, and as a BAST liaison to the Committee on Review and Evaluation of the Army Chemical Stockpile Disposal Program (Stockpile Committee). Over the past decade, he has chaired or served as a member on various NRC committees examining issues on the design evolution of the Assembled Chemical Weapons Alternatives program pilot plant facilities in Colorado and Kentucky.

Pedro J.J. Alvarez is the George R. Brown Professor of Engineering and the chair of the Department of Civil and Environmental Engineering at Rice University. He previously taught at the University of Iowa, where he also served as associate director for the Center for Biocatalysis and Bioprocessing and as Honorary Consul for Nicaragua. Dr. Alvarez's research focuses on environmental sustainability through bioremediation of contaminated aquifers, fate and transport of toxic chemicals, water footprint of biofuels, microbial-plant interactions, medical bioremediation, and environmental implications and applications of nanotechnology. He is a diplomate of the American Academy of Environmental Engineers and a fellow of AAAS, ASCE, IWA, WEF, and the Leopold Leadership Foundation. Past honors include the Athalie Richardson Irvine Clarke Prize, president of AEESP, the Malcom Pirnie-AEESP Frontiers in Research Award, the WEF McKee Medal for Groundwater Protection, the SERDP Cleanup Project of the Year Award, the Button of the City of Valencia, the Collegiate Excellence in Teaching Award from the University of Iowa, the Alejo Zuloaga Medal from the Universidad de Carabobo, Venezuela, a Career Award from the National Science Foundation, a Rackham Fellowship, and various best paper awards with his students. Dr. Alvarez currently serves on the editorial board of *Environmental Science and Technology,* as honorary professor at Nankai and Kunming Universities in China, and as adjunct professor at the Universidad Federal de Santa Catarina in Florianopolis, Brazil. Dr. Alvarez received his B.E. in civil engineering from McGill University and M.S. and Ph.D. degrees in environmental engineering from the University of Michigan.

Edward Bouwer is currently the Abel Wolman Professor of Environmental Engineering and chair of the Department of Geography and Environmental Engineering at Johns Hopkins University. He is also director of the Center for Contaminant Transport, Fate and Remediation. Prior to this position, Dr. Bouwer spent 7 years as director of the Center for Hazardous Substances in the Urban Environments, a project that was funded by the Environmental Protection Agency. Dr. Bouwer's research interests encompass factors that influence biotransformation of contaminants; bioremediation for control of contaminated soils and groundwaters; biofilm kinetics; biological processes design in wastewater, industrial, and drinking water treatment; transport and fate of microorganisms in porous media; and the behavior of metal

Copyright © National Academy of Sciences. All rights reserved.

and organic contaminants in sediments and aquatic ecosystems. He received his B.S.C.E. in civil engineering with a minor in nuclear engineering from Arizona State University and M.S. and Ph.D. degrees in environmental engineering and science from Stanford University.

David L. Freedman is currently a professor in the Department of Environmental Engineering and Earth Sciences at Clemson University. Prior to this position, Dr. Freedman was an associate and assistant professor of environmental engineering at the university. His major teaching and research interests include hazardous waste management, water and wastewater treatment, and biodegradation/bioremediation of recalcitrant organic compounds. Dr. Freedman's research focuses on the application of environmental microbiology to the development of enhanced methods for biodegrading hazardous organic contaminants. Of particular interest is elucidation of biotransformation pathways and application of this knowledge to design biological treatment processes. Current studies include development of bioaugmentation cultures for chlorinated ethenes that grow at low pH, evaluation of bioremediation strategies to treat high concentration of halogenated methanes, use of biostimulation to enhance biogeochemical degradation of chlorinated ethenes in fractured sandstone, and studies to determine the anaerobic biodegradability of 1,4-dioxane. Dr. Freedman received his B.S. in science and environmental change from the University of Wisconsin, Green Bay, an M.S. in environmental engineering from the University of Cincinnati, and a Ph.D. in environmental engineering from Cornell University.

Kimberly L. Jones is a professor and chair in the Department of Civil and Environmental Engineering at Howard University. She has previously worked as an associate and assistant professor in this department from 1996 to 2009. Her research interests are in water and wastewater treatment and membrane processes. Over the past 5 years, her research objectives have primarily been interdisciplinary, collaborative research in the emerging research areas of nanotechnology and nanobiotechnology, while continuing to build her environmental engineering capabilities. She has worked to develop an effective research strategy to investigate innovative technologies involving nanotechnology, environmental engineering, and membrane processes in an effort to solve some of the more pervasive problems facing our world, while working to attract, retain, and graduate technically competent African American students to increase the number of minority engineers and scientists in academic, industrial, and government related careers. Dr. Jones received her B.S. in civil engineering from Howard University, an M.S. in civil and environmental engineering from the University of Illinois, and a Ph.D. in environmental engineering from Johns Hopkins University.

Ronald Latanision (NAE) is the corporate vice president at Exponent, Inc. Prior to joining Exponent, Dr. Latanision was the director of the H.H. Uhlig Corrosion Laboratory in the Department of Materials Science and Engineering at the Massachusetts Institute of Technology (MIT) and held joint faculty appointments in the Department of Materials Science and Engineering and in the Department of Nuclear Engineering. He is now an emeritus professor at MIT. In addition, he is a member of the National Academy of Engineering and a fellow of ASM International, NACE International, and the American Academy of Arts and Sciences. From 1983-1988, Dr. Latanision was the first holder of the Shell Distinguished Chair in Materials Science. He was a founder of Altran Materials Engineering Corporation, established in 1992, and led the Materials Processing Center at MIT as its director from 1985 to 1991. Dr. Latanision's research interests are focused largely in the areas of materials processing and in the corrosion of metals and other materials in aqueous (ambient as well as high-temperature and high-pressure) environments. He specializes in corrosion science and engineering with particular emphasis on materials selection for contemporary and advanced engineering systems and in failure analysis. His expertise extends to electrochemical systems and processing technologies, ranging from fuel cells and batteries to supercritical water power generation and waste destruction. Dr. Latanision's research interests include stress corrosion cracking and hydrogen embrittlement of metals and alloys, water and ionic permeation through thin polymer films, photoelectrochemistry, and the study of aging phenomena/life prediction in engineering materials and systems. Dr. Latanision is a member of the International Corrosion Council and serves as co-editor-in-chief of *Corrosion Reviews*. Dr. Latanision has served as a science advisor to the U.S. House of Representatives Committee on Science and Technology, as a member of the Advisory Committee to the Massachusetts Office of Science and Technology, and as a member of the NRC National Materials Advisory Board. Dr. Latanision hosts the annual Siemens Westinghouse Science and Technology Competition on the MIT campus. In June of 2002, Dr. Latanision was appointed to the U.S. Nuclear Waste Technical Review Board, a position in which he continues to serve.

Michael J. Lockett (NAE) has been a professor of chemical engineering at the University at Buffalo, State University of New York, since 2008 and is a retired corporate fellow of Praxair, Inc. (formerly the Linde Division of Union Carbide Corporation), where he worked from 1982 to 2007. At Praxair, Dr. Lockett led a group that was responsible for distillation and heat transfer research and development and engineering for the industrial gases division. As a corporate fellow, his responsibilities included research, development, and design of equipment used in cryogenic air separation and low-temperature refrigeration. Between 1984 and 1989, he was the technical manager for the Union Carbide distillation

Copyright © National Academy of Sciences. All rights reserved.

and liquid-liquid extraction tray business, which supplied process equipment to the chemical and petrochemical industry worldwide. Between 1970 and 1982, he was a consultant to a number of companies in the chemical process industry. His recent awards include Praxair Technology Innovation Award (1999); American Institute of Chemical Engineers, Separation Division, Honors Awards (2002); fellow of the Royal Academy of Engineering (2004); Western New York Pioneer of Science Award (2006); and Praxair Technology Hall of Fame (2007). Dr. Lockett is a member of the National Academy of Engineering. He received a B.Sc. in chemical engineering from Imperial College, London University, a Ph.D. in chemical engineering from Trinity College, Cambridge University, and a D.Sc. in chemical engineering from the University of London.

Paige J. Novak is currently a professor in the Department of Civil Engineering at the University of Minnesota. Prior to this position, Dr. Novak was an associate and assistant professor at the university. Dr. Novak primarily specializes in research on the biological transformation of hazardous substances. She is particularly interested in how external environmental factors influence the biodegradation of these substances. This is of critical importance in designing and implementing biologically based remediation systems, using microorganisms to treat drinking water, or optimizing wastewater treatment. She works both in the laboratory and in the field, trying to understand the interactions between microorganisms and environmental conditions (such as electron-donor concentration and redox conditions). She has been involved in field work that has focused on implementing remediation technologies that alter environmental conditions and, thereby, stimulate beneficial biological activity. Dr. Novak has recently been studying dehalorespirers, the organisms that respire chlorinated organic compounds, focusing on those organisms that dechlorinate polychlorinated biphenyls. Additionally, she is working with her colleagues in civil and chemical engineering to develop a layered membrane that is capable of treating and containing common sediment contaminants. Dr. Novak has also been investigating the fate of estrogenic compounds in wastewater treatment. Dr. Novak received her B.S. in chemical engineering from the University of Virginia and M.S. and Ph.D. degrees in civil and environmental engineering from the University of Iowa.

Gene Parkin is currently the Donald E. Bently Professor of Engineering and professor of civil and environmental engineering at the College of Engineering at the University of Iowa. He is also director of the Center for Health Effects of Environmental Contamination at the university. Prior to these positions, he was an assistant and associate professor of civil and environmental engineering at Drexel University and acting assistant professor of civil engineering at Stanford University. Dr. Parkin's research interests include bioremediation of contaminated waters; constructed wetlands treatment of contaminated waters; the role of microbial-reactive mineral interactions in the fate and transport of pollutants (e.g., As, Hg, oxidized organics; anaerobic biological waste treatment; and health effects of environmental contamination). He is the co-author or author of numerous publications and a member of several professional societies, including the American Society of Civil Engineers. Dr. Parkin received his B.S. and M.S. degrees in civil engineering from the University of Iowa and a Ph.D. in environmental engineering from Stanford University.

Ronald F. Probstein (NAS/NAE) is a Ford Professor of Engineering (emeritus) at MIT. Previously, he was a professor of mechanical engineering at MIT and a distinguished visiting professor at the University of Utah. His research areas include physicochemical hydrodynamics, fluid mechanics, and environmental control technology. In the early 1970s, Dr. Probstein turned his attention to the desalination of salt water and purification of contaminated water. In 1982, he published *Synthetic Fuels* as a unified and coherent subject. It is the first and still the only book providing the underlying principles and possible means for producing fuels to replace natural ones. In the 1990s, Dr. Probstein introduced the concept of electrokinetic soil remediation. His basic procedure was patented and licensed to an industrial firm for further development, and today the subject has become one that is widely studied and applied worldwide. The scientific basis is outlined in his book *Physicochemical Hydrodynamic,* describing a discipline concerned with the interaction between fluid flow and physical, chemical, and biochemical processes. Dr. Probstein received his B.M.E. from New York University and his M.S.E., A.M., and Ph.D. degrees in aeronautical engineering from Princeton University.

Robert B. Puyear is an independent consultant specializing in corrosion prevention and control, failure analysis, and materials selection. Mr. Puyear worked at the Haynes Stellite Division of Union Carbide for 16 years developing high-performance materials for chemical and aerospace applications. He also worked for Monsanto for 21 years as a corrosion specialist, where he managed the Mechanical and Materials Engineering Section. He is an expert in materials engineering and evaluating materials of construction. Mr. Puyear graduated from Missouri School of Mines and Metallurgy with a B.S. in chemical engineering and from Purdue University with an M.S. in industrial administration. He was also a member on the NRC Committee on Review and Evaluation of the Army Chemical Stockpile Disposal Program.

Vernon L. Snoeyink (NAE) is a professor of environmental engineering emeritus who worked in the Department of Civil Engineering at the University of Illinois, where he has been on the faculty since 1969. From 1985 to 1999, he served as coordinator of the Environmental Engineering and Science

Copyright © National Academy of Sciences. All rights reserved.

Program. Dr. Snoeyink has taught graduate and undergraduate courses in water chemistry and water quality control, as well as a course in cultural awareness and speech enhancement to advanced doctoral students. He is a co-author of the book *Water Chemistry* (1980). Dr. Snoeyink's research has focused on drinking water quality control. His research program in recent years has centered on the removal of organic and inorganic contaminants from water using adsorption systems, especially granular and powdered activated carbon systems that are coupled with membrane systems. Also, he is investigating the mechanisms of formation and means to control water quality problems that develop in drinking water distribution systems as a result of reactions of iron, aluminum, and other inorganic substances. Dr. Snoeyink is a member of the National Academy of Engineering, the ASCE, the American Water Works Association, the Association of Environmental Engineering and Science Professors, and the International Water Association. He served as president of the Association of Engineering and Science Professors and currently is on the editorial advisory board of the water supply journal, *AQUA*. Dr. Snoeyink has a B.S. in civil engineering, an M.S. in sanitary engineering, and a Ph.D. in water resources engineering, all from the University of Michigan.

Copyright © National Academy of Sciences. All rights reserved.

Appendix D

Committee Meetings

FIRST MEETING
MAY 1-3, 2012, PUEBLO, COLORADO

Objectives:

- National Research Council introduction (administrative actions, including committee introductions and composition/balance/bias discussions for committee members).
- Discuss statement of task and project background; review with sponsor.
- Receive PCAPP overview and process briefings.
- Review report writing process and project plan.
- Refine draft outline for report; proceed toward Concept Draft.
- Make committee writing assignments.
- Decide future meeting dates and next steps.

Briefings and Site Tour

Presentation: PCAPP's Water Recovery System and Brine Reduction System, George Lecakes, PCAPP Chief Scientist

Tour of Pueblo Chemical Agent Destruction Pilot Plant: Committee members guided through biotreatment, water recovery, and brine reduction systems areas by PCAPP staff

Other PCAPP Staff Attending:
Bruce Huenefeld, PCAPP Site Manager, Assembled Chemical Weapons Alternatives
Walton Levi, PCAPP Deputy Site Manager, Assembled Chemical Weapons Alternatives
Rebecca C. Spiva, Project Engineering Manager, Bechtel Pueblo Team
Yakup Nurdogan, PCAPP Lead Industrial Wastewater Treatment Engineer, Bechtel Pueblo Team
Ron Entz, PCAPP Permitting Manager, Bechtel Pueblo Team
Bill Steedman, Senior Process Engineer, Bechtel Pueblo Team
Paul Usinowicz, Water/Wastewater Research Leader, Battelle
Kate Furman, PCAPP Quality Manager, Battelle

SECOND MEETING
JULY 23-25, 2012, WASHINGTON, D.C.

Objectives:

- National Research Council administrative actions, including composition/balance/bias discussions for one committee member.
- Review and discuss status of information requests.
- Refine report outline for report; continue chapter drafts development.
- Discuss possibilities for figures development for inclusion in report.
- Teleconference with ACWA and/or contractor concerning desired information.
- Decide future meeting dates and next steps.

Participants in Teleconference with PCAPP and Veolia Water Solutions & Technologies Staff:
George Lecakes, PCAPP Chief Scientist, Battelle
Yakup Nurdogan, PCAPP Lead Industrial Wastewater Treatment Engineer, Bechtel Pueblo Team
Rebecca C. Spiva, Project Engineering Manager, Bechtel Pueblo Team
Mark Patterson, Senior Process Engineer, Veolia Water Solutions & Technologies

THIRD MEETING
OCTOBER 2-3, 2012, WASHINGTON, D.C.

Objectives:

- Review and discuss status of information requests.
- Continue development of chapters, especially findings and recommendations and supporting text per-

Copyright © National Academy of Sciences. All rights reserved.

Review of Biotreatment, Water Recovery, and Brine Reduction Systems for the Pueblo Chemical Agent Destruction Pilot Plant

taining to the WRS-BRS, to Preconcurrence Draft status.
- Discuss possibilities for additional tables and figures development for inclusion in report.
- Teleconference with ACWA staff concerning desired information.
- Update committee on anticipated contractual expansion of study to include a more extensive and thorough examination of PCAPP biotreatment.
- Obtain suggestions for two or three potential new nominees to the committee to help with the biotreatment area tasking.
- Decide future meeting dates and next steps.

Participants in Teleconference with ACWA Personnel:
George Lecakes, PCAPP Chief Scientist, Battelle
Paul Usinowicz, Water/Wastewater Research Leader, Battelle

FOURTH MEETING
NOVEMBER 28-30, PUEBLO, COLORADO

Objectives:
- National Research Council introduction (administrative actions, including new committee member introductions and composition/balance/bias discussion).
- Discuss statement of task and project background; review with sponsor.
- Receive PCAPP overview and process briefings focused on PCAPP biotreatment and influences, etc., on downstream processes.
- Review report development process and project plan.
- Develop/revise outline for biotreatment coverage in report.
- Make and initiate committee writing assignments.
- Discuss future meeting dates and next steps.

Briefing and Site Tour

Presentation: Design and Operating Conditions of PCAPP's Biotreatment Process, Paul Usinowicz, Water/Wastewater Research Leader, Battelle

Tour of Pueblo Chemical Agent Destruction Pilot Plant: Committee members guided through biotreatment areas by PCAPP staff

FIFTH MEETING
JANUARY 30-FEBRUARY 1, 2013, WASHINGTON, D.C.

Objectives:
- Review and discuss any new information from PCAPP staff.
- Review overall status of report and study project.
- Do page-by-page review of Preconcurrence Draft 012413 text and artwork.
- Develop and review any additional text as may be deemed necessary to complete the report.
- Request signoff of Concurrence forms by committee members prior to their departure.
- Briefly describe NRC peer review process as performed for DEPS/BAST reports (mostly for benefit of first time committee members).
- Request suggestions for peer review nominees from committee members again now that the text content has been determined.

Copyright © National Academy of Sciences. All rights reserved.