Review of Secondary Waste Disposal Planning for the Blue Grass and Pueblo Chemical Agent Destruction Pilot Plants

Committee to Review Secondary Waste Disposal and Regulatory Requirements for the Assembled Chemical Weapons Alternative Program, National Research Council

ISBN: 0-309-12051-9, 84 pages, 8 1/2 x 11, (2008)

This free PDF was downloaded from:
http://www.nap.edu/catalog/12210.html

Visit the National Academies Press online, the authoritative source for all books from the National Academy of Sciences, the National Academy of Engineering, the Institute of Medicine, and the National Research Council:

- Download hundreds of free books in PDF
- Read thousands of books online, free
- Sign up to be notified when new books are published
- Purchase printed books
- Purchase PDFs
- Explore with our innovative research tools

Thank you for downloading this free PDF. If you have comments, questions or just want more information about the books published by the National Academies Press, you may contact our customer service department toll-free at 888-624-8373, visit us online, or send an email to comments@nap.edu.

This free book plus thousands more books are available at http://www.nap.edu.

Copyright © National Academy of Sciences. Permission is granted for this material to be shared for noncommercial, educational purposes, provided that this notice appears on the reproduced materials, the Web address of the online, full authoritative version is retained, and copies are not altered. To disseminate otherwise or to republish requires written permission from the National Academies Press.

THE NATIONAL ACADEMIES
Advisers to the Nation on Science, Engineering, and Medicine

REVIEW OF SECONDARY WASTE DISPOSAL PLANNING FOR THE BLUE GRASS AND PUEBLO CHEMICAL AGENT DESTRUCTION PILOT PLANTS

Committee to Review Secondary Waste Disposal and Regulatory Requirements for the Assembled Chemical Weapons Alternatives Program

Board on Army Science and Technology

Division on Engineering and Physical Sciences

NATIONAL RESEARCH COUNCIL
OF THE NATIONAL ACADEMIES

THE NATIONAL ACADEMIES PRESS
Washington, D.C.
www.nap.edu

Copyright © National Academy of Sciences. All rights reserved.

THE NATIONAL ACADEMIES PRESS 500 Fifth Street, N.W. Washington, DC 20001

NOTICE: The project that is the subject of this report was approved by the Governing Board of the National Research Council, whose members are drawn from the councils of the National Academy of Sciences, the National Academy of Engineering, and the Institute of Medicine. The members of the committee responsible for the report were chosen for their special competences and with regard for appropriate balance.

This study was supported by Contract No. W911NF-08-C-0020 between the National Academy of Sciences and the U.S. Army. Any opinions, findings, conclusions, or recommendations expressed in this publication are those of the author(s) and do not necessarily reflect the views of the organizations or agencies that provided support for the project.

International Standard Book Number-13: 978-0-309-12050-0
International Standard Book Number-10: 0-309-12050-0

Limited copies of this report are available from

Board on Army Science and Technology
National Research Council
500 Fifth Street, N.W., Room 940
Washington, DC 20001
(202) 334-3118

Additional copies are available from

The National Academies Press
500 Fifth Street, N.W.
Lockbox 285
Washington, DC 20055
(800) 624-6242 or
(202) 334-3313
(in the Washington metropolitan area)
Internet, http://www.nap.edu

Copyright 2008 by the National Academy of Sciences. All rights reserved.

Printed in the United States of America

Copyright © National Academy of Sciences. All rights reserved.

THE NATIONAL ACADEMIES

Advisers to the Nation on Science, Engineering, and Medicine

The **National Academy of Sciences** is a private, nonprofit, self-perpetuating society of distinguished scholars engaged in scientific and engineering research, dedicated to the furtherance of science and technology and to their use for the general welfare. Upon the authority of the charter granted to it by the Congress in 1863, the Academy has a mandate that requires it to advise the federal government on scientific and technical matters. Dr. Ralph J. Cicerone is president of the National Academy of Sciences.

The **National Academy of Engineering** was established in 1964, under the charter of the National Academy of Sciences, as a parallel organization of outstanding engineers. It is autonomous in its administration and in the selection of its members, sharing with the National Academy of Sciences the responsibility for advising the federal government. The National Academy of Engineering also sponsors engineering programs aimed at meeting national needs, encourages education and research, and recognizes the superior achievements of engineers. Dr. Charles M. Vest is president of the National Academy of Engineering.

The **Institute of Medicine** was established in 1970 by the National Academy of Sciences to secure the services of eminent members of appropriate professions in the examination of policy matters pertaining to the health of the public. The Institute acts under the responsibility given to the National Academy of Sciences by its congressional charter to be an adviser to the federal government and, upon its own initiative, to identify issues of medical care, research, and education. Dr. Harvey V. Fineberg is president of the Institute of Medicine.

The **National Research Council** was organized by the National Academy of Sciences in 1916 to associate the broad community of science and technology with the Academy's purposes of furthering knowledge and advising the federal government. Functioning in accordance with general policies determined by the Academy, the Council has become the principal operating agency of both the National Academy of Sciences and the National Academy of Engineering in providing services to the government, the public, and the scientific and engineering communities. The Council is administered jointly by both Academies and the Institute of Medicine. Dr. Ralph J. Cicerone and Dr. Charles M. Vest are chair and vice chair, respectively, of the National Research Council.

www.national-academies.org

Copyright © National Academy of Sciences. All rights reserved.

Copyright © National Academy of Sciences. All rights reserved.

COMMITTEE TO REVIEW SECONDARY WASTE DISPOSAL AND REGULATORY REQUIREMENTS FOR THE ASSEMBLED CHEMICAL WEAPONS ALTERNATIVES PROGRAM

PETER B. LEDERMAN, *Chair*, New Jersey Institute of Technology (retired), New Providence
OTIS A. SHELTON, *Vice-Chair*, Praxair, Inc., Danbury, Connecticut
CHARLES BARTON, Xoma, Berkeley, California
GARY S. GROENEWOLD, Idaho National Laboratory, Idaho Falls
REBECCA A. HAFFENDEN, Los Alamos National Laboratory, Santa Fe, New Mexico
WILLIAM R. RHYNE, ABS Consulting, Inc. (retired), Kingston, Tennessee
LEONARD M. SIEGEL, Center for Public Environmental Oversight, Mountain View, California
WALTER J. WEBER, JR., University of Michigan, Ann Arbor

Staff

MARGARET N. NOVACK, Study Director
HARRISON T. PANNELLA, Senior Program Officer
JAMES C. MYSKA, Senior Research Associate
ALICE V. WILLIAMS, Senior Program Assistant

Copyright © National Academy of Sciences. All rights reserved.

BOARD ON ARMY SCIENCE AND TECHNOLOGY

MALCOLM R. O'NEILL, *Chair*, Lockheed Martin Corporation (retired), Vienna, Virginia
ALAN H. EPSTEIN, *Vice-Chair*, Pratt and Whitney, East Hartford, Connecticut
RAJ AGGARWAL, Rockwell Collins, Cedar Rapids, Iowa
SETH BONDER, The Bonder Group, Ann Arbor, Michigan
JAMES CARAFANO, The Heritage Foundation, Washington, D.C.
ROBERT L. CATTOI, Rockwell International Corporation (retired), Dallas, Texas
DARRELL W. COLLIER, U.S. Army Space and Missile Defense Command (retired), Leander, Texas
JAY C. DAVIS, Lawrence Livermore National Laboratory (retired), Livermore, California
PATRICIA K. FALCONE, Sandia National Laboratories, Livermore, California
RONALD P. FUCHS, The Boeing Company, Seattle, Washington
WILLIAM R. GRAHAM, National Security Research, Inc. (retired), San Marino, California
PETER F. GREEN, University of Michigan, Ann Arbor
CARL GUERRERI, Electronic Warfare Associates, Inc., Herndon, Virginia
M. FREDERICK HAWTHORNE, University of Missouri, Columbia
MARY JANE IRWIN, Pennsylvania State University, University Park
ELLIOT D. KIEFF, Channing Laboratory, Harvard University, Boston, Massachusetts
LARRY LEHOWICZ, Quantum Research International, Arlington, Virginia
EDWARD K. REEDY, Georgia Tech Research Institute (retired), Atlanta
DENNIS J. REIMER, DFI International (retired), Arlington, Virginia
WALTER D. SINCOSKIE, Telcordia Technologies, Inc., Morristown, New Jersey
MARK J.T. SMITH, Purdue University, West Lafayette, Indiana
MICHAEL A. STROSCIO, University of Illinois, Chicago
JUDITH L. SWAIN, University of California at San Diego, La Jolla
WILLIAM R. SWARTOUT, Institute for Creative Technologies, Marina del Rey, California
EDWIN L. THOMAS, Massachusetts Institute of Technology, Cambridge
ELLEN D. WILLIAMS, University of Maryland, College Park

Staff

BRUCE A. BRAUN, Director
CHRIS JONES, Financial Associate
DEANNA P. SPARGER, Program Administrative Coordinator

Copyright © National Academy of Sciences. All rights reserved.

Preface

The U.S. Army Program Manager for Assembled Chemical Weapons Alternatives (PMACWA) is charged with disposing of chemical weapons as stored at two sites: Pueblo, Colorado, and Blue Grass, Kentucky. In accordance with congressional mandates, technologies other than incineration are to be used if they are as safe and as cost effective. The weapons are to be disposed of in compliance with the Chemical Weapons Convention. Although an element of the U.S. Army, the PMACWA is responsible to the Assistant Secretary of Defense for Acquisitions, Technology, and Logistics for completing this mission.

This report deals with the expected significant quantities of secondary wastes that will be generated during operations of the facilities and their closure. While there are only estimates for the waste quantities that will be generated, they provide a good basis for planning and developing alternatives for waste disposal while the plants are still in the design phase. Establishing efficient disposal options for the secondary wastes can enable more timely and cost-effective operation and closure of the facilities.

This report on the management of the anticipated secondary wastes from the Pueblo and Blue Grass facilities waste was initiated by the National Research Council (NRC) at the request of the PMACWA to inform the latter's consideration of potential waste management options. The statement of task for the Committee to Review Secondary Waste Disposal and Regulatory Requirements for the Assembled Chemical Weapons Alternatives Program is as follows:

> The NRC will conduct an examination of the environmental, regulatory and permit requirements that chemical agent disposal facilities (CDFs) are subject to, on a federal and state basis, concerning the treatment, storage, and/or handling and shipping of secondary wastes (chemical agent and non-agent related). Building on the current design plans for the Blue Grass Chemical Agent Destruction Pilot Plant (BGCAPP) and the Pueblo Chemical Agent Destruction Pilot Plant (PCAPP), as well as the recently completed study on Chemical Materials Agency secondary waste disposal, the NRC will compare the requirements for CDFs to those of similar facilities in industry that also treat, store, and/or handle and ship secondary wastes, with particular emphasis on industrial best practices.
>
> The comparison with industry practices includes, but is not limited to, the following areas:
>
> - the degree of characterization necessary for secondary waste (chemical agent and non-agent) produced during the stockpile disposal and/or storage operations, which is treated on-site or handled and shipped off-site for further treatment or disposal;
> - identification of additional studies that might be required to confirm if commercial Treatment, Storage and Disposal Facilities can handle secondary waste from BGCAPP or PCAPP;
> - recommended procedures and techniques to address public (including environmental justice) and regulatory issues;
> - ramifications and limitations of existing environmental permits including chemical demilitarization permit restrictions that do not exist in commercial/industrial permits;
> - the extent and number of health risk and transportation risk assessments deemed necessary;
> - criteria being considered for shipment of agent contaminated wastes for final treatment/disposal; and
> - facility closure requirements.

As the chair of the committee, I wish to express my appreciation to my fellow committee members for their contributions to the preparation of this report, which included interviewing officials and stakeholders, visiting sites, and collecting and analyzing significant information and issues in a short time. Every member of the small committee made significant contributions to the writing of the report.

The committee in turn is grateful to PMACWA staff and their contractors for making information available in a

Copyright © National Academy of Sciences. All rights reserved.

Review of Secondary Waste Disposal Planning for the Blue Grass and Pueblo Chemical Agent Destruction Pilot Plants
http://www.nap.edu/catalog/12210.html

timely manner. It is particularly grateful to Joseph Novad, of PMACWA, for making himself readily available and for his extensive efforts in spite of his many other duties in ensuring that data were available in a clear format, as well as making sure that all of the committee's questions were answered. The committee also thanks the staff of the Assembled Chemical Weapons Alternatives program Outreach Offices in Kentucky and Colorado and the staff of the cognizant regulatory agencies in those states, who spent valuable time with committee members to clarify many issues even though the permits are still under review. The committee also greatly appreciates the assistance of the NRC staff, who assisted in the fact-finding activities, carried on significant research in support of the report, and were instrumental in the production of the report. Data gathering was completed on May 30, 2008.

The Board on Army Science and Technology (BAST) members listed on page vi were not asked to endorse the committee's conclusions or recommendations, nor did they review the final draft of this report before its release, although board members with appropriate expertise may be nominated to serve as formal members of the study committees or as report reviewers. BAST was established in 1982 by the National Academies at the request of the Army. It brings broad military, industrial, and academic scientific, engineering, and management expertise to bear on Army technical challenges and other issues of importance to senior Army leaders. BAST also discusses potential studies of interest; develops and frames study tasks; ensures proper project planning; suggests potential committee members and reviewers for reports produced by fully independent, ad hoc study committees; and convenes meetings to examine strategic issues.

Peter B. Lederman, *Chair*
Committee to Review
Secondary Waste Disposal
and Regulatory Requirements
for the Assembled Chemical
Weapons Alternatives Program

Copyright © National Academy of Sciences. All rights reserved.

Acknowledgments

This report has been reviewed in draft form by individuals chosen for their diverse perspectives and technical expertise, in accordance with procedures approved by the National Research Council's (NRC's) Report Review Committee. The purpose of this independent review is to provide candid and critical comments that will assist the institution in making its published report as sound as possible and to ensure that the report meets institutional standards for objectivity, evidence, and responsiveness to the study charge. The review comments and draft manuscript remain confidential to protect the integrity of the deliberative process. We wish to thank the following individuals for their review of this report:

Richard A. Conway, NAE, Union Carbide Corporation (retired),
John R. Howell, NAE, University of Texas,
Hank C. Jenkins-Smith, University of Oklahoma,
Todd A. Kimmell, Argonne National Laboratory,
W. Leigh Short, Principal and Vice President of Woodward-Clyde (retired),
Pnnisseril Somasundaran, Columbia University, and
Yu Chu Yang, Consultant.

Although the reviewers listed above have provided many constructive comments and suggestions, they were not asked to endorse the conclusions or recommendations, nor did they see the final draft of the report before its release. The review of this report was overseen by Hyla Napadensky. Appointed by the National Research Council, she was responsible for making certain that an independent examination of this report was carried out in accordance with institutional procedures and that all review comments were carefully considered. Responsibility for the final content of this report rests entirely with the authoring committee and the institution.

Copyright © National Academy of Sciences. All rights reserved.

Copyright © National Academy of Sciences. All rights reserved.

Contents

SUMMARY 1

1 INTRODUCTION 5
Assembled Chemical Weapons Alternatives Program History, 5
Background, 5
NRC Activities, 7
Purpose of This Study, 7
Statement of Task, 7
Secondary Waste at ACWA Chemical Agent Destruction Pilot Plants, 8
Defining Secondary Waste, 8
Metrics on Degree of Agent Contamination, 8
Definition of "Generator Knowledge," 8
Waste Management Planning, 9
Study Methodology and Report Organization, 9

2 BGCAPP AND PCAPP PROCESS DESCRIPTIONS AND SECONDARY WASTE GENERATION 10
BGCAPP Process Description, 10
GB and VX Projectiles, 10
Mustard Agent H Projectiles, 13
GB- or VX-Filled M55 Rockets, 15
Nonprocess Secondary Wastes, 17
PCAPP Process Description, 17
Energetics Removal, Treatment, and Shipment, 18
Agent Hydrolysis and Munitions Body Treatment, 20
The SDU and the Autoclave, 20
OTS and AFA, 20
Biotreatment, 21
Water Recovery and Brine Reduction, 22

3 REGULATORY REQUIREMENTS APPLICABLE TO BGCAPP AND PCAPP SECONDARY WASTE MANAGEMENT 23
Federal Regulatory Framework for BGCAPP and PCAPP Operations, 23
Waste Characteristics and Listing, 23
Scrap Metal Exclusion, 24
Blue Grass Chemical Agent Destruction Pilot Plant, 24
Applicable Kentucky Statutes and Regulations, 24
BGCAPP Waste Analysis Plan, 25

Copyright © National Academy of Sciences. All rights reserved.

Review of Secondary Waste Disposal Planning for the Blue Grass and Pueblo Chemical Agent Destruction Pilot Plants
http://www.nap.edu/catalog/12210.html

Pueblo Chemical Agent Destruction Pilot Plant, 25
Applicable Colorado Statutes and Regulations, 25
PCAPP Waste Analysis Plan, 26

4 STATUS OF PLANNING FOR THE MANAGEMENT OF SECONDARY WASTES AT BGCAPP AND PCAPP 27
Secondary Waste Generation from BGCAPP Operations That Include Supercritical Water Oxidation, 27
Categories of Secondary Wastes and Waste Descriptions, 27
Other Waste Streams, 29
Secondary Waste Generation from PCAPP Operations That Include Biotreatment, 30
Dunnage, Energetics, and Miscellaneous Metal Parts, 30
Solids from the Munitions Treatment Unit, 30
Filtering Media, 30
Secondary Wastes from Water Recovery System and Brine Reduction System, 31
Laboratory Wastes, 32
Planning Considerations for Secondary Waste Management, 33
Determination of Agent-Contaminated and Noncontaminated Waste, 33
Hydrolysate Chemistry, Related Analytical Approaches, 34
Offsite Treatment of Secondary Wastes, 36
Closure Planning, 36
Comparison with Industrial Practices, 38
Waste Management Treatment and Disposal, 38
Human Health Risk Assessments, 38
Transportation Risk Assessments, 38

5 PUBLIC PARTICIPATION 40
BGCAPP Stakeholder Interactions and Issues, 40
Mechanisms for Public Outreach and Involvement, 40
Summary of CDCAB Secondary Waste Working Group Positions and Resolutions, 40
Other Community Positions, 41
Issues Specific to the Treatment of BGCAPP Hydrolysates, 42
PCAPP Stakeholder Interactions and Issues, 42
Mechanisms for Public Outreach and Involvement, 42
CAC Positions and Resolutions, 43
Issues Specific to the Treatment of PCAPP Hydrolysates, 44
Underlying Factors in Both Communities, 44
Findings and Recommendations, 45

6 ALTERNATIVE OFFSITE WASTE MANAGEMENT OPTIONS 46
Major Wastes That Should Be Considered for Offsite Disposal, 47
Agent Hydrolysates, 47
Energetics Hydrolysate, 47
Activated Carbon, 47
Concrete, 47
Metal, 48
Brines, 48
Analytical Considerations, 48
Offsite Disposal Issues, 48
Transportation Risk, 48
Permit Modification, 49
Waste Characterizations, 49
National Environmental Protection Act, 50
Industrial Practices, 50
Past Experience with Offsite Disposal, 51

Copyright © National Academy of Sciences. All rights reserved.

Review of Secondary Waste Disposal Planning for the Blue Grass and Pueblo Chemical Agent Destruction Pilot Plants
http://www.nap.edu/catalog/12210.html

REFERENCES 53

APPENDIXES

A National Research Council Reports on the Assembled Chemical Weapons Assessment/ Alternatives Program, 57
B Definition of "Generator Knowledge," 58
C Physical Properties of Chemical Agents in Munitions Stored at Blue Grass Army Depot and Pueblo Chemical Depot, 59
D Results from Technical Risk Reduction Program Activity 2a, Phase II, for GB and Activity 11 for VX, 61
E Committee Meetings and Site Visits, 64
F Biographical Sketches of Committee Members, 66

Copyright © National Academy of Sciences. All rights reserved.

Tables, Figures, and Boxes

TABLES

1-1 Description of the Chemical Weapons in the BGAD Stockpile, 6
1-2 Chemical Weapons Stockpile of HD- or HT-Filled Munitions at PCD, 6

4-1 Proposed Secondary Waste Management Approaches at BGCAPP, 28
4-2 BGCAPP Estimated Agent-Contaminated Waste Stream Summary for Operations and Closure, 29
4-3 BGCAPP Projected 1X Agent-Contaminated Secondary Waste Generation Rates During Operations and Closure, 29
4-4 BGCAPP Projected 3X-4X Agent-Contaminated Secondary Waste Generation Rates During Operations and Closure, 29
4-5 Proposed Secondary Waste Management Approaches for PCAPP, 31
4-6 Total Estimated Secondary Wastes from Normal Operations and Closure for PCAPP, 32
4-7 PCAPP Projected Amounts of Mustard-Agent-Contaminated Secondary Waste from Normal Operations According to Level of Agent Contamination, 32
4-8 PCAPP Projected Amounts of Mustard-Agent-Contaminated Secondary Waste from Closure According to Level of Agent Contamination, 33

6-1 Anticipated Quantities of Hydrolysates from BGCAPP and PCAPP Operations, 46

C-1 Physical Properties of Nerve Agents, 59
C-2 Physical Properties of Mustard Agents, 60

FIGURES

2-1 Process and waste stream diagram for BGCAPP, 11
2-2 Munitions washout system, 12
2-3 Metal parts treater, 14
2-4 Energetics batch hydrolyzer, 15
2-5 Rocket cutting machine, 16
2-6 Rocket shear machine, 17
2-7 Process and waste stream diagram for PCAPP, 19
2-8 Munitions treatment unit, 21

BOXES

5-1 Members of Kentucky Chemical Destruction Community Advisory Board, December 2007, 41
5-2 Meeting Between Committee Chair and an Employee of the Environmental Protection Agency Assigned to Serve as Liaison to CWWG, 42
5-3 Members of Colorado Chemical Demilitarization Citizens' Advisory Commission, 43

Copyright © National Academy of Sciences. All rights reserved.

Abbreviations and Acronyms

ABCDF	Aberdeen Chemical Agent Disposal Facility
ACWA	Assembled Chemical Weapons Alternatives
ADM	acquisition decision information
AEL	airborne exposure limit
AFA	agent filter area
AFS	aluminum filtration system
ANR	agent neutralization reactor
APB	agent processing building
BGAD	Blue Grass Army Depot
BGCA	Blue Grass Chemical Activity
BGCAPP	Blue Grass Chemical Agent Destruction Pilot Plant
BPBGT	Bechtel Parsons Blue Grass team
BRA	brine recovery area
BRS	brine reduction system
BTA	biotreatment area
CAC	Citizens' Advisory Commission
CDCAB	Chemical Destruction Community Advisory Board
CDPHE	Colorado Department of Public Health and the Environment
CMA	Chemical Materials Agency
COD	certificate of designation
CWWG	Chemical Weapons Working Group
DE	destruction efficiency
DICDI	diisopropylcarbodiimide
DIPU	1,3-diisopropyl urea
DOD	Department of Defense
DOT	Department of Transportation
DPE	demilitarization protective ensemble
EBH	energetics batch hydrolyzer
EDT	explosive destruction technology
EIS	environmental impact statement
ENS	energetics neutralization system
EPA	Environmental Protection Agency
ERB	energetics reconfiguration building
ESM	energetics service magazine
GB	nerve agent (sarin)
H	Levinstein mustard agent
HD	distilled mustard agent
HEPA	high-efficiency particulate air (filter)
HHRA	human health risk assessment
HT	a mixture of HD and T, bis(2-chloroethylthioethyl) ether
HVAC	heating, ventilation, and air conditioning
ICB	immobilized cell bioreactor
JACADS	Johnston Atoll Chemical Agent Disposal System
KDEP	Kentucky Department of Environmental Protection
LDR	land disposal restriction
LOQ	limit of quantification
LPMD	linear projectile/mortar disassembly (machine)
MDL	method detection limit
MPHRA	multiple-path health risk assessment
MPT	metal parts treater
MTU	munitions treatment unit
MWS	munitions washout system
NECDF	Newport Chemical Agent Disposal Facility
NEPA	National Environmental Policy Act
NRC	National Research Council

Copyright © National Academy of Sciences. All rights reserved.

Review of Secondary Waste Disposal Planning for the Blue Grass and Pueblo Chemical Agent Destruction Pilot Plants
http://www.nap.edu/catalog/12210.html

OTE	offgas treatment for the energetics neutralization system
OTM	offgas treatment for the metal parts treater
OTS	offgas treatment system
P&A	precision and accuracy
PCAPP	Pueblo Chemical Agent Destruction Pilot Plant
PCB	polychlorinated biphenyl
PCD	Pueblo Chemical Depot
PMACWA	Program Manager for Assembled Chemical Weapons Alternatives
ppb	parts per billion
PPE	personal protective equipment
ppm	parts per million
psig	pounds per square inch gauge
RCM	rocket cutting machine
RCRA	Resource Conservation and Recovery Act
RD&D	research, design, and development
RFP	request for proposal
RO	reverse osmosis
ROD	record of decision
RSM	rocket shear machine
SCWO	supercritical water oxidation
SDU	supplemental decontamination unit
SET	Secure Environmental Treatment (a DuPont facility)
SFT	shipping and firing tube
TAL	target action limit
TCLP	toxicity characteristic leaching procedure
TRA	transportation risk assessment
TRRP	Technical Risk Reduction Program
TSCA	Toxic Substances Control Act
TSDF	treatment, storage, and disposal facility
VOC	volatile organic compound
VSL	vapor screening level
VX	nerve agent
WAP	waste analysis plan
WCL	waste control limit
WRS	water recovery system

Copyright © National Academy of Sciences. All rights reserved.

Summary

The U.S. Army is in the process of disposing of the nation's stockpile of chemical agents and munitions. At present, there are five active disposal facilities and two that are in the design and early construction phases. This study deals with the wastes that will be generated as a result of the disposal of the munitions at the two facilities that have yet to be built and placed in operation. These wastes are considered to be "secondary wastes"; the munitions and agents are themselves considered to be "hazardous wastes." Of the five operating facilities, four use combustion to process the agents and munitions, while the fifth uses neutralization to process bulk agent. The two facilities considered in this study will utilize neutralization (hydrolysis) as the basic agent destruction process, followed by different treatments of the product of the neutralization, hydrolysate. While the facilities are in many ways similar, they are also different in the types of agents and munitions that are to be disposed of.

The Blue Grass Chemical Agent Destruction Pilot Plant (BGCAPP) will dispose of munitions containing nerve agents GB or VX, or mustard agent H. These are contained in a variety of munitions, including M55 rockets containing GB or VX. The Pueblo Chemical Agent Destruction Pilot Plant (PCAPP) will process projectile munitions that contain only mustard agent HD or HT; no rockets are stored at the Pueblo Chemical Depot (PCD). At the Blue Grass Army Depot (BGAD), the agents and munitions to be destroyed number approximately 100,000 items, two-thirds of which are M55 rockets. The various projectiles stored at PCD number nearly 800,000. While these facilities are called "pilot plants," they are in fact full-scale facilities that are pilot plants only in the sense that a new technology is being used at each facility. Pilot plant designation, design, and fabrication also allow for more flexibility in the operation until the process and technologies have been demonstrated fully.

This study is based on estimates of the wastes that will be generated during operations and closures. These estimates are based on design data for the respective pilot plants, data from other operating facilities, and data from the Johnston Atoll Chemical Agent Disposal System and the Aberdeen Chemical Agent Disposal Facility, which have already been closed. Many of the wastes will be the same as or very similar to those that were or are being generated at the other facilities, both closed and operating. While some wastes that will be generated at BGCAPP and PCAPP will be different from the wastes generated at facilities using combustion technology, neutralization technology was used at the Aberdeen Chemical Agent Disposal Facility to dispose of bulk mustard agent and at the Newport Chemical Agent Disposal Facility (NECDF) to destroy bulk nerve agent VX. These facilities thus offer additional insight into the secondary waste generation scenarios that can be expected for BGCAPP and PCAPP.

The Committee to Review Secondary Waste Disposal and Regulatory Requirements for the Assembled Chemical Weapons Alternatives Program (ACWA Secondary Waste Committee) analyzed process flow sheets and other design information that was provided in order to comprehensively identify all sources of secondary waste streams. While the primary agent destruction process will be basically the same at BGCAPP and PCAPP, the facilities are very different in detail owing to the aforementioned differences in the types of munitions and agents to be processed by each. In brief, the munitions are moved from storage igloos to the disposal facility, where they are unpacked. Energetics, if any, are removed, and the agent is drained from the agent cavity of the munition. The agent is then neutralized and the liquid hydrolysate is treated in a second step to further degrade the organic material. The energetics are either shipped offsite or neutralized to produce a second liquid hydrolysate, which is also treated to further degrade it. Detailed descriptions of the two process systems may be found in Chapter 2.

A large number of secondary waste streams emanate from the process steps, maintenance activities, personal protection equipment, and laboratory operations. The wastes are categorized as "contaminated" or "noncontaminated with agent residues" depending on whether they (1) have been in

Copyright © National Academy of Sciences. All rights reserved.

Review of Secondary Waste Disposal Planning for the Blue Grass and Pueblo Chemical Agent Destruction Pilot Plants
http://www.nap.edu/catalog/12210.html

contact with agent or (2) have been treated to destroy the agent residues or to meet certain waste clearance criteria. These criteria were established based on prior experience but in general have not been formally approved for the site by the respective regulatory permitting authorities. In the case of PCAPP, a waste analysis plan has been developed but not approved. For BGCAPP, a waste analysis plan must still be developed and submitted. In both Kentucky and Colorado, these wastes are "listed wastes," as defined in Resource Conservation and Recovery Act (RCRA) regulations, because they stem from agent processing. Wastes may be "hazardous" because they are agent-contaminated or because they are "characteristic hazardous wastes" under RCRA and applicable state regulations. The regulations and permits under which the sites operate are discussed in Chapter 3.

This study considers all secondary wastes that are generated from the disposal processes and focuses on the wastes that could be considered for offsite shipment. The wastes that are generated from the process at each site as currently designed are described in detail in Chapter 4. While all secondary wastes were considered, this study is primarily concerned with the major waste streams in terms of volume. The major wastes from BGCAPP include

- Dunnage,
- Metal from munitions,
- Supercritical water oxidation (SCWO) effluent solution,
- Spent decontamination solution,
- Plastics, particularly from demilitarization protective equipment,
- Noncontaminated energetics, and
- Hydrolysate (if shipped to a treatment, storage, and disposal facility (TSDF)).

From PCAPP, they include

- Dunnage,
- Metal from munitions,
- Plastic, particularly for demilitarization protective equipment,
- Noncontaminated energetics,
- Water/brine recovery salt cake and biomass sludge,
- Spent activated carbon, and
- Hydrolysate (if shipped to a treatment, storage, and disposal facility (TSDF)).

In addition, a great deal of metal, concrete, decontamination solution, plastics, and spent activated carbon will be generated during the closure phase.

There is significant public sentiment, as expressed by the respective Citizens' Advisory Commissions in Kentucky and Colorado as well as other interested groups, that all contaminated and potentially contaminated wastes should be treated onsite. This sentiment stems from concern about shipping chemical agents, which has been prohibited by statute since the mid-1990s. There has since been some movement toward shipping some wastes offsite, and there may be more willingness on the part of the stakeholders to consider offsite shipments of certain other wastes. However, this would require changing the current permits. Moreover, based on discussions with the stakeholders, appropriate safeguards are necessary to ensure that such shipments would be safe, environmentally sound, and considerate of environmental justice concerns of the transit and receiving areas. The committee met with various stakeholder groups to sample public sentiment. Issues raised in these discussions are valuable, but the committee notes that the conclusions arrived at are derived from only a small fraction of the population and may not be representative of the wider populations in the areas. The committee's discussions with stakeholder groups are summarized in Chapter 5.

The committee found that the ACWA program and its contractors appear to be treated by regulatory authorities just like any commercial facility that treats, stores, and disposes of listed hazardous wastes, with one exception: It is expected that the Army will treat the hazardous waste onsite. Many commercial hazardous wastes are routinely shipped to permitted treatment, storage, and disposal facilities (TSDFs). At present, this is not possible for many of the major volume waste streams that will be generated at BGCAPP and PCAPP despite the fact that many of these waste streams have been safely shipped to permitted TSDFs from the other combustion and neutralization facilities.

In Chapter 6, the committee discusses the technical feasibility of shipping some of the major waste streams to TSDFs that are permitted to handle similar wastes that may be more difficult to dispose of. It recognizes that there may be institutional impediments to such alternatives. The committee concluded that from a technical perspective, the wastes could be shipped offsite without negatively impacting either safety or the environment and could have advantages in terms of disposal program acceleration, including lower investment, a smaller footprint for the facility, and a shorter time for closure. However, the offsite option may be unattractive for other reasons. That is a decision outside the scope of this study. Some of the institutional barriers or hurdles to using an alternative to onsite treatment are presented.

MAJOR FINDINGS AND RECOMMENDATIONS

Two key recommendations from Chapter 6 along with the major findings and recommendations from the other chapters appear below.

Key Findings and Recommendations

Finding 6-1. The shipment of certain secondary wastes to suitable offsite TSDFs could have significant advantages. Among these are savings in facility infrastructure and equip-

Copyright © National Academy of Sciences. All rights reserved.

Review of Secondary Waste Disposal Planning for the Blue Grass and Pueblo Chemical Agent Destruction Pilot Plants
http://www.nap.edu/catalog/12210.html

ment costs, a smaller footprint for the facility, and a shorter time for closure.

Finding 6-8. The experience to date with the offsite shipment and treatment of mustard and nerve agent hydrolysates from the Aberdeen and Newport Chemical Agent Disposal Facilities indicates that offsite transportation and disposal of these materials is a safe and technically viable course of action.

Recommendation 6-7. Because experience shows that offsite shipment and treatment of agent hydrolysates from BGCAPP and PCAPP is safe and technically viable, and in view of better analytical methods being developed, the PMACWA should consider this option now, before the plants are built and operating, to maximize the benefit from such a change. It is important to consider everything that would impact such a change.

Finding 6-9. Spent activated carbon and other closure wastes were successfully shipped offsite from the Aberdeen Chemical Agent Disposal Facility to an appropriate TSDF for ultimate disposal.

Recommendation 6-8. The shipment offsite to an appropriate permitted TSDF of all types of wastes, including spent activated carbon and closure wastes, should be examined and given serious consideration in light of past experience showing that it is a technically viable and safe method of disposing of these wastes.

Other Major Findings and Recommendations

Finding 3-1. A detailed waste analysis plan for BGCAPP has not been developed or submitted for review and approval. Such a plan would detail sampling and analytical methods for each waste stream.

Recommendation 3-1. While the Bechtel Parsons Blue Grass Team and the Program Manager for Assembled Chemical Weapons Alternatives are not in violation of regulatory requirements and have ample time to meet the requirement to submit a waste analysis plan for BGCAPP 18 months prior to receipt of munitions at the facility, it would be prudent to develop and submit the plan as early as possible in order to determine the requirements that may be placed on the operations by the Kentucky Department of Environmental Protection and avoid unnecessary delays to the operation.

Finding 4-1. The documentation for secondary waste streams made available to the committee failed to identify reverse osmosis rejectate brine, supercritical water oxidation (SCWO) filtrate solid waste, SCWO titanium tank liners, venturi scrubber particulate filters, or filters from the energetics offgas treatment system (OTE) as potential secondary wastes from BGCAPP.

Recommendation 4-1. To avoid the possibility of unanticipated disposal problems, the PMACWA and the BGCAPP contractor should characterize and consider waste management options for reverse osmosis rejectate brine, supercritical water oxidation (SCWO) filtrate solid waste, SCWO titanium tank liners, venturi scrubber particulate filters, and energetics offgas treatment system filters before submitting the waste analysis plan required by RCRA. The PMACWA should also look carefully for any as-yet-unidentified secondary waste streams from BGCAPP or PCAPP.

Finding 4-4. The research on analysis methodologies for determining the level of residual agent in GB hydrolysate from Technical Risk Reduction Program activity 2a, Phase II, provides assurance that the level of residual GB in the hydrolysate can be measured accurately.

Finding 4-5. The research on analysis methodologies for determining the levels of residual agent in VX hydrolysate from Technical Risk Reduction Program activity 11 provides assurance that the level of residual VX in the hydrolysate can be measured accurately.

Finding 4-6. Work on the characterization of mustard agent hydrolysis showed that the analysis for mustard agent is accurate and did not give any evidence of any outstanding risk to the public, the workforce, or the environment stemming from the hydrolysis chemistry or the analysis of the hydrolysate.

Recommendation 4-6. When developing transportation risk assessments, the PMACWA should use the most current hazardous waste assessment methodologies for characterizing the wastes generated at BGCAPP and PCAPP.

Recommendation 4-7. A site-specific transportation risk assessment should be developed for all wastes that may be agent-contaminated and shipped from BGCAPP and PCAPP.

Finding 5-1. Through the Kentucky Chemical Demilitarization Citizens' Advisory Commission (CAC) and the CAC's subsidiary Chemical Destruction Community Advisory Board, as well as public affairs activities that include the Blue Grass Chemical Stockpile Outreach Office and public meetings, the communities around the Blue Grass Army Depot (BGAD) have ample opportunity to learn about BGCAPP operations as well as proposed secondary waste disposal. The ACWA program and its contractors do an effective job of cooperating with and supporting these organizations.

Copyright © National Academy of Sciences. All rights reserved.

Review of Secondary Waste Disposal Planning for the Blue Grass and Pueblo Chemical Agent Destruction Pilot Plants
http://www.nap.edu/catalog/12210.html

Finding 5-2. Through the Colorado Chemical Demilitarization Citizens' Advisory Commission, as well as a public affairs program that includes the Pueblo Chemical Stockpile Outreach Office and its field activities, the communities around the Pueblo Chemical Depot have ample opportunity to learn about PCAPP operations as well as proposed secondary waste disposal. The ACWA program and its contractors do an effective job of cooperating with and supporting these organizations.

Finding 5-3. Communities that might be affected by the transportation and offsite disposal of secondary and closure wastes do not at present have an official forum through which they can interact with the ACWA program.

Finding 5-4. Members of the communities around the Blue Grass Army Depot and the Pueblo Chemical Depot have not expressed serious concern about the disposition of secondary wastes other than hydrolysate from BGCAPP and PCAPP. However, they want technical assurance that the materials are not contaminated with agent, as defined by the minimum detection level, before being transported offsite for reuse or disposal.

Finding 5-5. There is substantial local opposition to offsite shipment and disposal of hydrolysate from both BGCAPP and PCAPP. Local groups can be expected to forestall any such action by protracting the permitting process or the environmental review (if there is one) as well as by instigating political action and litigation.

Recommendation 5-1. To avoid potential misunderstandings and obstacles, the PMACWA should explain in advance, and solicit feedback on, any proposals to ship wastes from BGCAPP and PCAPP. Special efforts should be made to include a diverse representation of the stakeholder communities.

Recommendation 5-2. The PMACWA should explain to the public precisely how it plans to determine whether a particular waste stream is suitable for shipment, including analytical procedures for showing whether the stream contains any residual contamination by an agent or its by-products.

Recommendation 6-3. The PMACWA should perform a quantitative transportation risk assessment for hydrolysate, including a quantitative assessment of the human health consequences of hydrolysate spills with and without a fire. This assessment needs to be completed to facilitate discussions with the public and regulators about the hydrolysate offsite shipment alternative.

Recommendation 6-5. For both BGCAPP and PCAPP, the selection of an appropriate TSDF for the treatment of agent hydrolysates and other secondary wastes should take into account transportation issues, emergency response considerations, and public and community interests.

Copyright © National Academy of Sciences. All rights reserved.

1

Introduction

ASSEMBLED CHEMICAL WEAPONS ALTERNATIVES PROGRAM HISTORY

Background

In 1996, in response to local opposition to the use of incineration, the U.S. Congress passed Public Laws 104-201 and 104-208, which (1) froze funds for construction of chemical agent destruction pilot plants at the Pueblo Chemical Depot (PCD) in Colorado and at the Blue Grass Army Depot (BGAD) in Richmond, Kentucky; (2) required the Army to demonstrate at least two alternatives to incineration to destroy assembled chemical weapons; (3) directed the Department of Defense (DOD) to establish a new chemical demilitarization program with a program manager who had not been previously associated with the Army's chemical demilitarization program; and (4) required the Army to coordinate these activities with the National Research Council (NRC). This program became known as the Assembled Chemical Weapons Assessment program and has since been renamed the Assembled Chemical Weapons Alternatives (ACWA) program.

After an elaborate selection process in which the public was extensively involved, six technologies received the grade of "acceptable technology," and the Army chose three of them for demonstration (Demo I) of their technical viability to meet destruction objectives. Two of the three technologies were found acceptable after demonstration testing, and they proceeded to engineering design studies to assess their acceptability for implementation to destroy the chemical stockpile at PCD, which comprises nearly 800,000 projectiles and mortar rounds filled with mustard agent. In 1999, Congress passed Public Laws 106-79 and 106-52, which required the Army to demonstrate the remaining three technologies that had initially received the "acceptable technology" grade (Demo II) and to consider all viable technology alternatives for destroying the chemical weapons at BGAD in Kentucky, where munitions containing both mustard agent and nerve agents are stored. At BGAD, the agents and munitions to be destroyed number approximately 100,000 items, two-thirds of which are M55 rockets. The various projectiles stored at PCD number nearly 800,000. Table 1-1 lists chemical agent munition types and quantities stored at BGAD; Table 1-2 lists those at PCD.

The DOD's Defense Acquisition Board issued an acquisition decision memorandum (ADM) in July 2002 that approved neutralization (hydrolysis with water) followed by biotreatment for full-scale pilot testing at the Pueblo site and directed acceleration of the destruction of the stockpile.[1] The record of decision (ROD) was signed on July 18, 2002 (U.S. Army, 2002).[2] The request for proposal (RFP) to design, build, operate, and close a chemical agent destruction facility at Pueblo was issued in July 2002. Although the RFP specified that hydrolysis followed by biotreatment was to be used in the process, the selection of all other unit operations was left to the RFP respondents. The only other requirement of the RFP was that all hazardous materials were to be destroyed onsite. The system contract was awarded to Bechtel National, Inc., in September 2002, and work on a full-scale pilot plant design for the Pueblo Chemical Agent Destruction Pilot Plant (PCAPP) began in December 2002.[3]

Two of the technologies demonstrated in Demo II and one of those in Demo I were selected to undergo engineering design studies as candidates for destroying the weapons at Blue Grass. The Defense Acquisition Board issued an ADM on February 3, 2003, that approved neutralization (hydroly-

[1]Memorandum from G.C. Aldridge, Under Secretary of Defense, to the Secretary of the Army and the Program Manager, Assembled Chemical Weapons Assessment (ACWA) program, "Disposal of the chemical weapons stockpile at Pueblo, Colorado—acquisition decision memorandum (ADM), July 16, 2002."

[2]Under the National Environmental Policy Act, a final environmental impact statement was issued on April 17, 2002.

[3]PCAPP is not a pilot plant in the traditional sense of the term. Indeed, it is intended to destroy the entire stockpile of chemical agent and to perform all associated treatments. This is also true for BGCAPP.

Copyright © National Academy of Sciences. All rights reserved.

Review of Secondary Waste Disposal Planning for the Blue Grass and Pueblo Chemical Agent Destruction Pilot Plants
http://www.nap.edu/catalog/12210.html

TABLE 1-1 Description of the Chemical Weapons in the BGAD Stockpile

Munition Type	Chemical Fill (lb)	Energetics Content (lb)
155-mm projectile, M110	H, 11.7	Tetrytol, 0.41
8-inch projectile, M426	GB, 14.4	None
115-mm rocket, M55	GB, 10.7	Composition B, 3.2 M28 propellant, 19.1
115-mm rocket warhead, M56	GB, 10.7	Composition B, 3.2
155-mm projectile, M121/A1	VX, 6	None
115-mm rocket, M55	VX, 10.1	Composition B, 3.2 M28 propellant, 19.1
115-mm rocket warhead, M56	VX, 10.1	Composition B, 3.2

SOURCE: Adapted from data provided to PMACWA on the Munition Items Disposition Action System (MIDAS) by the MIDAS team in July 1997.

TABLE 1-2 Chemical Weapons Stockpile of HD- or HT-Filled Munitions at PCD

Munition Type	Chemical Fill (kg)	Energetics Content (kg)	Configuration
105-mm cartridge, M60	HD, 1.4	Burster: tetrytol, 0.12 Fuze: M51A5 Propellant: M1	Unreconfigured. Complete projectile includes fuze, burster. Propellant loaded with cartridge. Cartridges packed two per wooden box.
105-mm cartridge, M60	HD, 1.4	Tetrytol, 0.12	Reconfigured. Includes burster and nose plug, but no propellant or fuze. Repacked on pallets.
155-mm projectile, M110	HD, 5.3	Tetrytol, 0.19	Includes lifting plug and burster but no fuze. On pallets.
155-mm projectile, M104	HD, 5.3	Tetrytol, 0.19	Includes lifting plug and burster but no fuze. On pallets.
4.2-inch mortar, M2A1	HD, 2.7	Tetryl, 0.064 Propellant: M8	Includes propellant and ignition cartridge in a box.
4.2-inch mortar, M2	HT, 2.6	Tetryl, 0.064 Propellant: M8	Includes propellant and ignition cartridge in a box.

NOTES: The terms "unreconfigured" and "reconfigured" are defined in the column labeled "Configuration." The M1 propellant present in 105-mm cartridges that have not been reconfigured is present in M67 propelling charges—that is, granular propellant contained in bags as specified in MIL-DTL-60318C.

SOURCE: Adapted from BPT, 2004.

sis with caustic)[4] followed by supercritical water oxidation (SCWO) for full-scale pilot plant testing at BGAD. An RFP to design, build, operate, and close a chemical agent destruction pilot plant at Blue Grass was issued on February 7, 2003. The ROD was signed on February 27, 2003.[5] The RFP for the Blue Grass Chemical Agent Destruction Pilot Plant (BGCAPP) specified that hydrolysis followed by SCWO was to be used and that all hazardous materials were to be destroyed onsite. As was the case for Pueblo, the selection of all other unit operations for the Blue Grass pilot plant was left to the RFP respondents. The Army awarded the contract to the Bechtel Parsons Blue Grass Team, a joint venture formed by Bechtel National, Inc., and Parsons Engineering. (The teaming subcontractors are Battelle, General Physics, General Atomics, and the Washington Demilitarization Company.) The Bechtel Parsons Blue Grass Team submitted the initial design to the Army on July 29, 2004 (BPBGT, 2004).

Both BGCAPP and PCAPP are in the final stages of design, and some infrastructure is in the construction phase. Thus, while the waste types are well established, the quantities are estimates based on design. Both plants are being designed and will be built based on RODs that were promulgated in 2002 and 2003 for these first-of-a-kind disposal facilities. Because there is much first-of-a-kind equipment, the facilities are being permitted under a research, development, and demonstration (RD&D) provision of the

[4]The terms "neutralization" and "hydrolysis" are often used interchangeably in the literature on chemical agent demilitarization. Hydrolysis is the more appropriate term from a chemical process perspective. Neutralization is more in keeping with the notion of neutralizing and thereby rendering innocuous. It may be found in the literature to refer to hydrolysis in either aqueous or nonaqueous media.

[5]Under the National Environmental Policy Act, a Final Environmental Impact Statement was issued on December 27, 2002.

Copyright © National Academy of Sciences. All rights reserved.

Review of Secondary Waste Disposal Planning for the Blue Grass and Pueblo Chemical Agent Destruction Pilot Plants
http://www.nap.edu/catalog/12210.html

Resource Conservation and Recovery Act (RCRA), which allows for some flexibility through permit modifications. At both sites, as the system is proven, a more traditional RCRA permit under a Part B application will be required. At present, the plants are being permitted in stages under the RD&D provision.[6]

NRC Activities

Since the inception of the ACWA program in 1996, committees of the NRC have conducted a series of independent studies addressing various technical issues that have arisen as the program has developed. These studies were conducted at the request of the PMACWA and, along with other information, were used by PMACWA staff to make decisions on the direction of the program. During the technology selection phase of the program, they involved technical reviews of the candidate technologies. These were followed by reports on the demonstration testing that evaluated critical data on the efficacy of specific processes.

After several technology providers had been selected that offered alternative technology packages that satisfied the ACWA criteria for a total solution capable of completely destroying assembled chemical weapons, the NRC was asked to perform in-depth reviews of the data, analyses, and results of testing that had been developed. Together, this information comprised the engineering design studies for destruction facilities planned for the Pueblo, Colorado, and Blue Grass (Richmond), Kentucky, sites. The NRC committee produced its analyses of the engineering design studies, one for the Pueblo facility (NRC, 2001) and one for the Blue Grass facility (NRC, 2002a).

Shortly thereafter, PMACWA awarded contracts to system contractors chosen to design, construct, operate, and close first-of-a-kind chemical agent destruction pilot plants at the PCD and the BGAD. In 2005, yet another NRC committee issued interim design assessment reports, one for PCAPP (NRC, 2005a) and one for BGCAPP (NRC, 2005b). These reports were issued with the intent that PMACWA could benefit from the committee's assessment before the pilot plant facility designs were finalized.

In the years since then, the ACWA program has experienced changes largely attributable to budgetary constraints placed on it by Congress. One of the changes has been the departure from an absolute commitment to facility designs that have been termed "total solutions," meaning that all waste streams from munitions destruction would be completely treated onsite. Instead, in recent years, there has been a recognition that more economical options may be viable without jeopardizing the safety, health, or protection of workers, the public, or the environment. In continuing to assist PMACWA as it proceeds with implementation of the ACWA project plans and schedules, the NRC has issued a number of reports in recent years concerning various aspects and revisions to the original designs put forth by the systems contractors for each site. A complete list of NRC reports on the ACWA program appears in Appendix A.

PURPOSE OF THIS STUDY

The purpose of this study is to provide PMACWA with a technical appraisal of its evolving plans to safely and efficiently handle, treat, and ultimately dispose of the waste materials that remain following the destruction of the assembled chemical weapons stored at PCD (Colorado) and BGAD (Kentucky).

These waste materials, termed secondary wastes, pose a significant planning challenge in regard to considerations such as the operational parameters that process equipment must satisfy, the storage capacity needed for the materials, and whether offsite disposal is advisable. These considerations in turn affect how long and in what manner the facility will need to be operated, including the amount of time needed for closure.

In view of the effect that the disposition of secondary wastes has on facility operations, and recognizing the strong interest by the public that these materials be safely and responsibly managed, PMACWA has requested that an NRC committee review the current state of its planning in this regard and provide appropriate guidance and commentary on options to be considered, including what may be acceptable to regulators and the public and how comparable waste materials are dealt with in commercial industrial operations. The statement of task given for the Committee to Review Secondary Waste Disposal and Regulatory Requirements for the Assembled Chemical Weapons Alternatives Program is as follows:

> The NRC will conduct an examination of the environmental, regulatory and permit requirements that chemical agent disposal facilities (CDFs) are subject to, on a federal and state basis, concerning the treatment, storage, and/or handling and shipping of secondary wastes (chemical agent and non-agent related). Building on the current design plans for the Blue Grass Chemical Agent Destruction Pilot Plant (BGCAPP) and the Pueblo Chemical Agent Destruction Pilot Plant (PCAPP), as well as the recently completed study on Chemical Materials Agency secondary waste disposal, the NRC will compare the requirements for CDFs to those of similar facilities in industry that also treat, store, and/or handle and ship secondary wastes, with particular emphasis on industrial best practices.
>
> The comparison with industry practices includes, but is not limited to the following areas:

[6]Information gained in the course of site visits by committee subgroups to the pertinent state regulators: Kentucky Department of Environmental Protection (KDEP), Frankfort, Kentucky, January 24, 2008, and Colorado Department of Public Health and Environment (CDPHE), Denver, Colorado, February 14, 2008.

Copyright © National Academy of Sciences. All rights reserved.

Review of Secondary Waste Disposal Planning for the Blue Grass and Pueblo Chemical Agent Destruction Pilot Plants
http://www.nap.edu/catalog/12210.html

- the degree of characterization necessary for secondary waste (chemical agent and non-agent) produced during the stockpile disposal and/or storage operations, which is treated on-site or handled and shipped off-site for further treatment or disposal;
- identify additional studies that might be required to confirm if commercial Treatment, Storage and Disposal Facilities can handle secondary waste from BGCAPP or PCAPP;
- recommended procedures and techniques to address public (including environmental justice) and regulatory issues;
- ramifications and limitations of existing environmental permits including chemical demilitarization permit restrictions that do not exist in commercial/industrial permits;
- the extent and number of health risk and transportation risk assessments deemed necessary;
- criteria being considered for shipment of agent contaminated wastes for final treatment/disposal; and
- facility closure requirements.

SECONDARY WASTE AT ACWA CHEMICAL AGENT DESTRUCTION PILOT PLANTS

Defining Secondary Waste

This study examines the wastes expected to be generated by the two ACWA program facilities that have yet to be built, BGCAPP and PCAPP. PCAPP will be processing munitions containing mustard blistering agent (in HD and HT forms), while the BGCAPP will process munitions containing mustard agent H and nerve agents GB and VX, including M55 rockets having nerve agent fills. To distinguish clearly between these waste munitions and the wastes generated during the process of their disposal, in this study, all wastes that ultimately leave the plant are considered "secondary wastes." Wastes that are generated during the processing operations and are further treated in the pilot plant facility are considered "process waste streams" and are considered in this study only if they may be considered suitable for ultimate disposal without further in-process treatment. This is consistent with an earlier NRC report, *Review of Chemical Agent Secondary Waste Disposal and Regulatory Requirements*, which examined secondary waste issues at U.S. Army chemical agent disposal facilities other than BGCAPP and PCAPP that are currently in operation (NRC, 2007).

It is certain that a significant quantity of secondary waste will be generated over the operational and closure lifetime of BGCAPP and PCAPP. The time, effort, and resources needed to deal with the secondary waste will be substantial, and its handling can become a subject of public debate or criticism concerning the operation of the pilot plants. The catchall term "secondary waste" encompasses many different waste forms, and opportunities may exist for cost savings or for schedule acceleration if other disposal options become applicable to certain secondary waste streams.

The nature of the secondary waste determines the options for its processing and disposal—specifically, whether or not it is contaminated and how it is categorized according to RCRA regulations. In addition, the concerns of members of the surrounding communities about disposal of the secondary waste that will be generated at BGCAPP and PCAPP will also influence the waste treatment decisions by PMACWA.

Metrics on Degree of Agent Contamination

In the past, the Army had a system for classifying wastes as clean or contaminated that was based on the treatment the waste stream received. It now uses airborne exposure limits (AELs), a measurement devised by the Centers for Disease Control and Prevention and incorporated into the waste control limits (WCLs) that have been established in connection with treatment conditions of the wastes to determine the status of the wastes: "agent-contaminated" or "clean," an approach used in this study as well. For agent-contaminated waste materials that cannot be characterized by extraction procedures, the WCL is defined in terms of a vapor screening level (VSL). Materials having agent contamination <1 VSL meet the WCL criteria. The VSL concentrations are equivalent to the short-term limit values used at other chemical agent disposal facilities.[7] For agent-contaminated materials that can be characterized by extraction procedures, the WCL values of 20 ppb for VX and GB and 200 ppb for mustard agent have been adopted by some facilities. The values were originally derived from Army chemical agent regulations for workforce drinking water standards (NRC, 2007). It is worthwhile noting that WCLs are implemented in terms of target release levels, which are in general somewhat lower than the WCLs to account for variability in the degree of analytical precision. Target release levels have not been set for BGCAPP and remain a high priority in the overall job of completing the waste analysis plan (WAP) required by RCRA.[8]

Definition of "Generator Knowledge"

Like other industrial waste, secondary wastes from chemical agent disposal facilities are either hazardous or nonhazardous. A particular waste is classified into one or the other of these categories by laboratory analysis or by "generator knowledge" of the material's source, use, and history of exposure.

"Generator knowledge" is a hazardous waste evaluation method commonly accepted and defined by the Environmen-

[7]The VSL and short-term limit values are as follows: GB, 0.0001 mg/m^3; VX, 0.00001 mg/m^3; mustard agent, 0.003 mg/m^3 (NRC, 2007).

[8]John Barton, chief scientist, and Kevin Regan, environmental manager, BGCAPP, "Current waste analysis and certification," presentation to the committee, January 24, 2008.

Copyright © National Academy of Sciences. All rights reserved.

Review of Secondary Waste Disposal Planning for the Blue Grass and Pueblo Chemical Agent Destruction Pilot Plants
http://www.nap.edu/catalog/12210.html

tal Protection Agency and individual states (EPA, 2005). It is based in most cases on (1) a facility process flow diagram or narrative description of the process generating the waste or (2) the chemical makeup of all ingredients or materials used in the process that generates the waste. See Appendix B for additional information on the use of generator knowledge.

Waste Management Planning

The regulatory requirements governing the management of wastes generated at chemical agent disposal facilities (and other industrial facility operations) require that a WAP be submitted before operations begin. The WAP provides detailed information on all streams and proposed sampling and analytical methodologies. Such a plan is available for PCAPP[9] and was submitted to the Colorado Department of Public Health and the Environment (CDPHE). However, although it had not yet been approved as this report was being written, it did serve as an important source for the analysis of the PCAPP situation in this study. Because no WAP was available for BGCAPP, other information had to be used to develop the committee's analysis.

STUDY METHODOLOGY AND REPORT ORGANIZATION

There are both advantages and disadvantages involved in addressing the generation, handling, and treatment of secondary waste at yet-to-be-constructed facilities using first-of-a-kind equipment and processes that have yet to be fully integrated into the overall processes of an operational facility. The advantage is that by examining the issues associated with secondary waste at this early juncture, technical, regulatory, and public acceptance matters can be deliberated with sufficient time for adjustment and implementation. The disadvantage is the gaps in information—some plans are still evolving and some data are still to be generated—and the uncertainties surrounding such things as public perceptions, the amounts and conditions of secondary waste generated, state approvals, the availability of appropriate disposal sites, and the like.

The committee recognized that although plans for assembled chemical weapons destruction at the Blue Grass and Pueblo sites have many features in common, there are also factors that make decisions on the management and disposition of secondary waste singular for each site. For example, BGAD stores a wider variety of agents and munition types than does PCD. Moreover, the processes by which these agents and munitions will be destroyed have both commonalities and differences. With this in mind, the committee determined that it would address the technical issues from the perspectives of the individual sites, keeping in mind that there may be programmatic aspects that would be pertinent to both sites. Chapter 2 examines technical considerations related to the BGCAPP and PCAPP designs as presently configured, with emphasis on the generation of waste streams.

Chapter 3 describes the regulatory framework for the management and disposal of secondary waste at BGCAPP and PCAPP. Chapter 4 presents the committee's review and analysis of the estimated quantities of the various secondary waste streams expected to be generated from the current designs for BGCAPP and PCAPP, plans and options for disposal of these waste streams, and a review of certain practices that are typically used in industrial waste management situations. In addition to being generated during operations, secondary waste will also be generated during facility closure, and this also is briefly discussed.

The proper management of wastes from chemical agent disposal facilities is a matter of interest to the surrounding communities and other segments of the public. The structure of public participation for each site is described in Chapter 5, where issues of concern to public stakeholders and the perspectives of their representatives are also examined.

Chapter 6 presents alternatives to current waste management plans for each site that PMACWA may wish to consider, including offsite disposal of several major waste streams.

[9]See Section C of PMACWA, 2006.

Copyright © National Academy of Sciences. All rights reserved.

2

BGCAPP and PCAPP Process Descriptions and Secondary Waste Generation

This chapter provides an overview of the processes currently planned to destroy the stockpiles of chemical weapons stored at Blue Grass Army Depot (BGAD) and Pueblo Chemical Depot (PCD). They are presented primarily to indicate how the various waste streams are generated. The description of the process for BGCAPP is organized to take into account the trio of agents and the three munition types that will be processed in several types of munition destruction campaigns. In contrast, the description of the process for PCAPP, where a large number of similar munitions containing only one type of agent will be processed, is largely described in terms of the sequential operations that will be used.

BGCAPP PROCESS DESCRIPTION

Insight into the secondary waste streams that will be produced during operation of BGCAPP can be gained through an understanding of the processes for agent and munitions destruction and the waste materials generated by each of those processes. Different handling approaches are necessary for the various types of munitions that require disposal at BGCAPP. Figure 2-1 provides a flow plan of the BGCAPP processes that reflects the three types of munitions: [1]

- 8-inch projectiles filled with GB and 155-mm projectiles filled with VX;
- 155-mm projectiles filled with mustard agent H; and
- M55 rockets (and M56 rocket warheads) filled with VX or GB.

[1]Note that the actual order of the munitions processing schedule calls for all GB munitions to be processed first, followed by all VX munitions and, finally, all mustard agent H munitions. Changeover periods of 12 weeks between processing GB and VX munitions and 20 weeks between processing VX and H munitions are scheduled. Sam Hariri, lead process engineer, BGCAPP, "BGCAPP throughput and availability analysis (TAA)," presentation to the committee, January 23, 2008.

Processing of these munitions is discussed serially in the following sections. In many cases, similar operations are used for all three types of munitions. To avoid repetition, the greatest detail is provided for the processing of the GB- and VX-filled projectiles. Figure 2-1 reflects the BGCAPP design configuration made available to the committee when this report was being prepared.

The stored munitions are first delivered from storage igloos to the unpack area. Before leaving the unpack area, all packing material (dunnage) is removed. In addition to the munitions themselves, there is a substantial amount of nonprocess waste (dunnage and miscellaneous waste) that will contribute to the secondary waste generated and disposed of by BGCAPP. Monitoring is performed during the transport from storage and unpacking operations to ensure the safety of workers in recognition that some of these nonprocess wastes have the potential for being agent-contaminated.

GB and VX Projectiles

Neither the 8-inch GB projectiles nor the 155-mm VX projectiles stored at BGAD are charged with energetics. Hence, separation of the burster from the agent-filled portion of the rounds is not needed (as is the case for the H-filled munitions discussed later). After being unpacked, these GB and VX projectiles are initially sent to the nose closure removal station, where the lifting plugs are separated from the projectile bodies. The lifting plugs are fed to the metal parts treater (MPT), and the projectile bodies are sent to the munitions washout station (MWS) (see Figure 2-2).

At the MWS, agent is accessed by puncturing the projectile bodies, which are then drained by inverting the munitions. The residue remaining in the agent cavity is then washed out with a high-pressure spray nozzle using water at 110°F and 10,000 psig (NRC, 2005b). The rinse-out process is important to remove whatever fraction of the agent may have gelled and cannot be readily decanted from the perforated projectiles. The MWS process generates two process

Copyright © National Academy of Sciences. All rights reserved.

Review of Secondary Waste Disposal Planning for the Blue Grass and Pueblo Chemical Agent Destruction Pilot Plants
http://www.nap.edu/catalog/12210.html

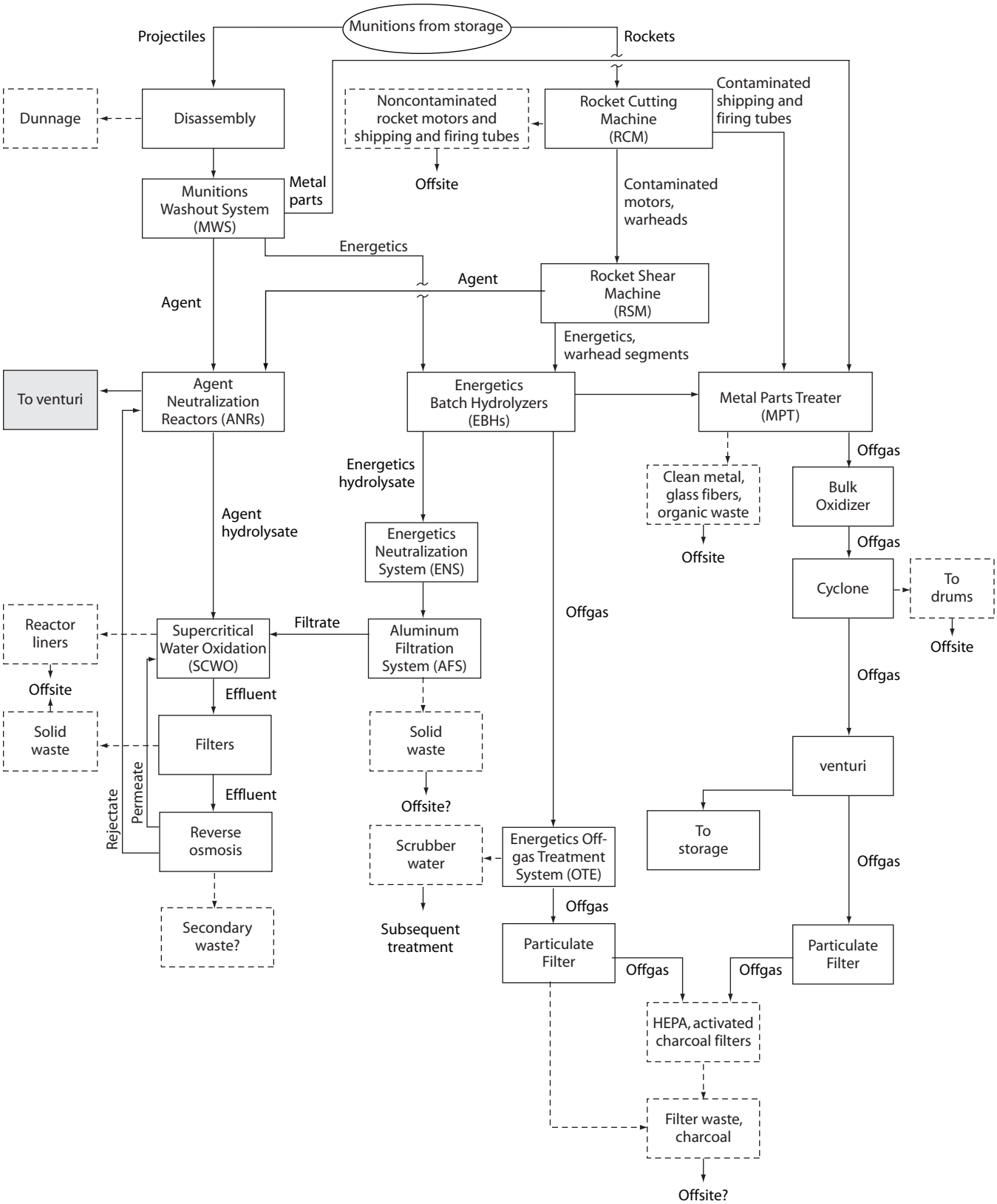

FIGURE 2-1 Process and waste stream diagram for BGCAPP.

Copyright © National Academy of Sciences. All rights reserved.

Review of Secondary Waste Disposal Planning for the Blue Grass and Pueblo Chemical Agent Destruction Pilot Plants
http://www.nap.edu/catalog/12210.html

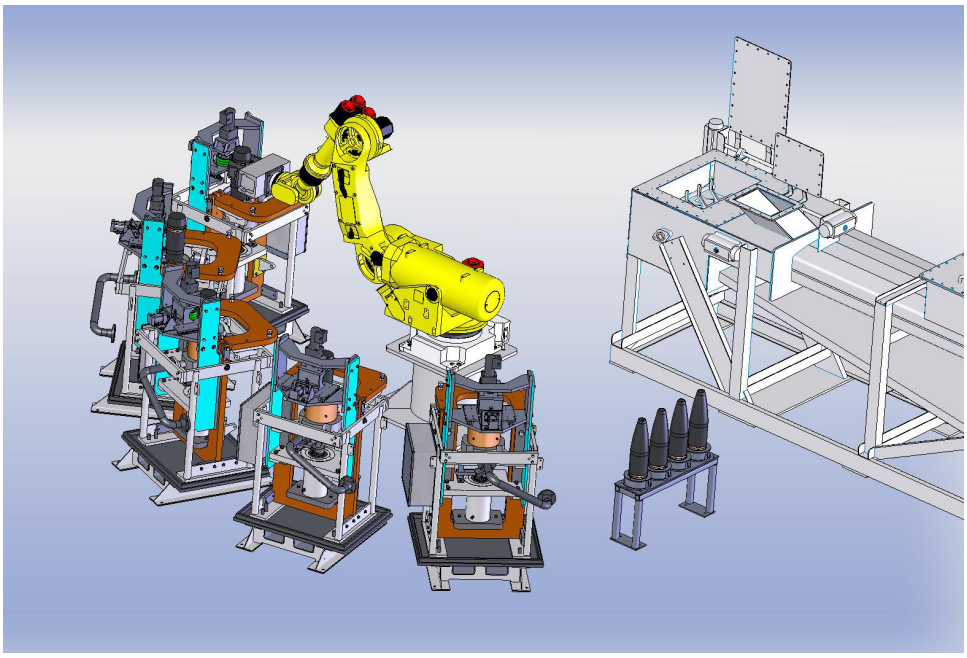

FIGURE 2-2 Munitions washout system. SOURCE: PMACWA, May 20, 2008.

streams: (1) liquid agent and rinse water and (2) solid metal munition casings. In addition, the atmosphere from the MWS process is filtered by the main munitions demilitarization building heating, ventilation, and air conditioning (HVAC) system, which is discussed later in the process description.

Treatment of Liquid Agent and Rinse Water from the MWS

The liquid agent and rinse water from the MWS is sent to the agent collection/toxic storage tanks and subsequently to the agent neutralization reactors (ANRs), which have been charged with demineralized water and sodium hydroxide to maintain the desired caustic pH level.[2] The resulting solution, now termed agent hydrolysate, is then transferred to a sampling tank, where the contents are analyzed to ensure that at least 99.9999 percent (160 ppb for VX, 75 ppb for GB, and 86 ppb for H) of the agent has been destroyed.[3] Hydrolysis of GB produces isopropylmethyl phosphonic acid and neutralized hydrofluoric acid. The hydrolysis products of VX are more complex. The principal products from the VX hydrolysis reaction are bis(diisopropylamino) ethanethiol and ethylmethyl phosphonic acid. A less prevalent but competing hydrolysis reaction forms S-2-(diisopropylamino)ethyl methylphosphonothioic acid, also known as compound EA-2192, which retains much of the toxicity of VX itself (Yang, 1999). Secondary reactions of the hydrolysis products, stabilizers, and impurities form additional chemical products during VX hydrolysis. Upon verification of 99.9999 percent agent destruction, the agent hydrolysate is transferred to an agent hydrolysate storage tank, where it is blended with energetics hydrolysate prior to secondary treatment. Additional details on the chemistry and analysis of the hydrolysate are discussed in Chapter 3 and Appendix B.

Secondary treatment of agent hydrolysate is mandated by the Chemical Weapons Convention treaty to ensure irreversible destruction of the chemical agents. The BGCAPP design, as described in the record of decision of February 7, 2003, incorporates the use of supercritical water oxidation (SCWO) for secondary destruction of the hydrolysate. SCWO essentially mineralizes the organic constituents, effectively degrading any traces of the residual agent and also destroying hydrolysis products. The SCWO system for BGCAPP is expected to be fairly tolerant in its ability to process hydrolysate feed streams containing two or more liquid phases. At BGCAPP, the feed for the SCWO reactor will be a mixture of agent and energetic hydrolysates. The reactor will operate at a temperature of 1200°F and a pressure of 3,400 psig.[4] This environment is highly oxidizing and converts most elements to their most stable oxidation states (e.g., carbon is oxidized to form carbon dioxide, hydrogen to form water, sulfur to form sulfates, and so on). However, the caustic hydrolysate feed stream is extremely corrosive under SCWO conditions:

[2]Sam Hariri, lead process engineer, BGCAPP, "Process design overview," presentation to the committee, January 23, 2008.

[3]A destruction efficiency of 99.9999 percent is somewhat higher than the values given; however, these values are used to ensure that the variance range in the analyses results is taken into account.

[4]Sam Hariri, lead process engineer, BGCAPP, "Process design overview," presentation to the committee, January 23, 2008.

Copyright © National Academy of Sciences. All rights reserved.

Review of Secondary Waste Disposal Planning for the Blue Grass and Pueblo Chemical Agent Destruction Pilot Plants
http://www.nap.edu/catalog/12210.html

Salts can precipitate and plug the SCWO equipment, making maintenance of the reactors problematic.

The SCWO system in turn produces its own waste streams, which must be appropriately managed. The extremely corrosive SCWO environment results in limited lifetimes for the SCWO reactor liners, which will likely require frequent replacement during runs with VX and GB (NRC, 2005b). Thus, a secondary waste will be produced in the form of titanium SCWO reactor liners that have experienced significant corrosion. The SCWO operation produces several other effluents. The offgas from the unit is separated from the liquid stream, and the gaseous effluent is then processed in the HVAC system for the SCWO processing building.[5] The condensed-phase SCWO effluents are a mixture of liquid and solid material that flow into the water recovery system (WRS). The SCWO process also produces salts (e.g., sodium sulfate) that are insoluble in supercritical water but emerge as a slurry and are separated from the liquid in serial multimedia and canister filters. These filters constitute a secondary waste stream. The residual liquid goes to the reverse osmosis (RO) system, which recovers 70 percent of the water. The other 30 percent of the RO separation is a rejectate brine.[6] This constitutes a secondary waste stream and may contain agent below the detection limit. The RO rejectate brine is intended for offsite disposal, provided nondetect levels of agent can be verified.[7]

Treatment of Metal Munition Casings

The drained metal projectile casings from treatment in the MWS are decontaminated in the MPT (see Figure 2-3), which will treat wastes both during munitions destruction campaigns and during facility closure operations. The MPT will treat munitions casings and other metal wastes, as well as plastics such as polyvinyl chloride (PVC), teflon, butyl rubber, cellulosic materials, sludge, concrete, the lifting plugs, wooden pallets, and demilitarization protective ensemble (DPE) suits. The objective of MPT treatment is to ensure that metal parts and other secondary wastes processed through it attain a temperature of 1000°F throughout for at least 15 minutes, which will allow their unrestricted release or disposal. The same conditions are used at all other chemical weapons destruction facilities to achieve agent decontamination of such materials.[8]

Offgases from the MPT are sent to the MPT offgas treatment system (OTM), which consists of a flameless bulk oxidizer unit, a cyclone particulate separator, and a venturi scrubber.[9] The OTM is a critical system, because its throughput limits the amount of waste that can be processed per MPT batch. Within the flameless bulk oxidizer, heated air and natural gas are mixed with the offgas to ensure oxidation of the entrained organics. The bulk oxidizer operates at 2000°F, with a gas residence time of 1 second to ensure destruction of dioxins and furans. Particulates present in the effluent from the bulk oxidizer are removed by a cyclone particulate separator, and the particles are recycled back into the MPT for further destruction. The gaseous effluent is sent to a venturi scrubber, which removes particulate matter >14 μm in diameter and neutralizes the acid gases by caustic scrubbing. The venturi scrubber also treats offgas from the ANRs and the agent hydrolysate storage tanks (NRC, 2005b). The liquid effluent from the venturi scrubber is sent to agent hydrolysate storage, where it is combined with agent hydrolysate.[10] However, if agent is detected, then the liquid is recycled to the ANRs for further treatment.

Finding 2-1. Continued recycling of the particulates into the metal parts treater from the cyclone particulate separator of the metal parts treater offgas treatment system may cause solids buildup, which could impede operation of the metal parts treater.

Recommendation 2-1. The operation of the metal parts treater should be modified to avoid solids buildup and the attendant creation of a particulate waste stream that could impede its operation.

The overhead gases from the venturi scrubber are then passed through an additional particulate filter. The particulate filter medium constitutes a secondary waste stream from the venturi scrubber and is one of the larger secondary waste streams. The filtered venturi offgas is heated to 120°F to lower the relative humidity and then sent to the munitions demilitarization building HVAC, where it flows through activated carbon filters.[11]

Mustard Agent H Projectiles

The mustard agent H-filled 155-mm projectile rounds differ from those filled with nerve agent VX in that they are explosively configured (i.e., they contain both the agent fill and a burster), and hence the energetics must be separated before the chemical agent fill can be removed for neutralization. In the BGCAPP design, the burster is separated from the main body of the munition, which contains the chemical

[5]Sam Hariri, lead process engineer, BGCAPP, "Process design overview," presentation to the committee, January 23, 2008.

[6]Sam Hariri, lead process engineer, BGCAPP, "Process design overview," presentation to the committee, January 23, 2008.

[7]"Nondetect levels" refers to trace (parts per billion) amounts of a particular agent that may be present but that are below the value of the approved analytical procedure being used for that agent to quantify with precision.

[8]See also the discussion on management of scrap metal under environmental regulations in Chapter 3.

[9]Sam Hariri, lead process engineer, BGCAPP, "Process design overview," presentation to the committee, January 23, 2008.

[10]Sam Hariri, lead process engineer, BGCAPP, "Process design overview," presentation to the committee, January 23, 2008.

[11]Sam Hariri, lead process engineer, BGCAPP, "Overview of MPT and SCWO process design," presentation to the committee, January 23, 2008.

Copyright © National Academy of Sciences. All rights reserved.

Review of Secondary Waste Disposal Planning for the Blue Grass and Pueblo Chemical Agent Destruction Pilot Plants
http://www.nap.edu/catalog/12210.html

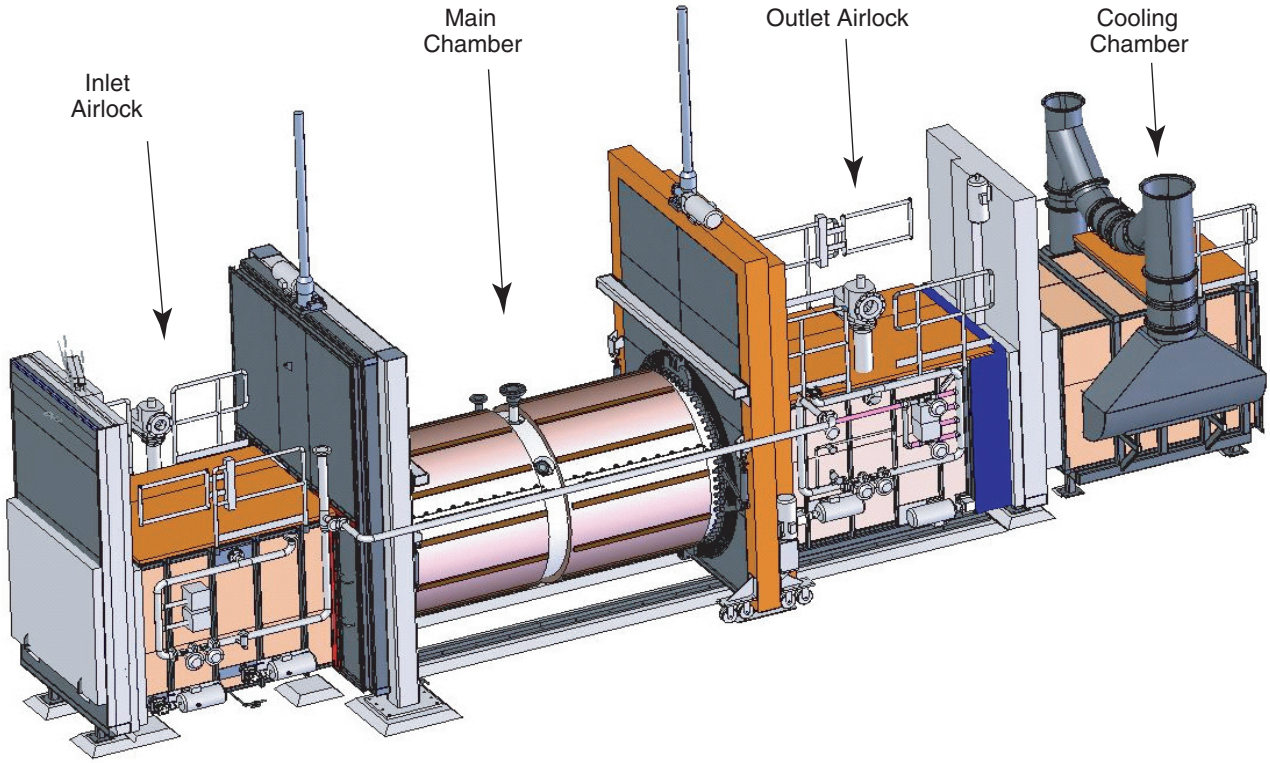

FIGURE 2-3 Metal parts treater. SOURCE: NRC, 2008.

fill, by the linear projectile/mortar disassembly (LPMD) machine.[12] The agent fill is then emptied from the energetics-free munition at the MWS.

Liquids from H-Filled 155-mm Projectiles

Following treatment in the MWS, the process at BGCAPP for treating the agent removed from the H-filled 155-mm munitions is identical to that for the VX-filled 155-mm munitions, with the exception that H is first hydrolyzed using hot water (194°F) and then treated with 50 percent sodium hydroxide (NRC, 2005b). This treatment converts mustard agent H principally to chloride and thiodiglycol; however, the resultant hydrolysate may also contain residual quantities of other chemical compounds that were present in the agent or that are hydrolyzed mustard agent impurities. A fraction of these are characterized as higher molecular weight heels that exist in either the solid or the gelled state within the munition (Yang et al., 1997).[13] The heels are made up of sulfonium ions formed from dimerization of mustard agent in the munitions (Yang et al., 1997)[14] and are effectively dissolved and hence removed from the munition bodies by the MWS. The salts produced from mustard agent hydrolysis are primarily sodium chloride, while the offgas contains some minimal amounts of hydrocarbons.

Bursters from H-Filled 155-mm Projectiles

The separated bursters are treated in the energetics batch hydrolyzer (EBH) (see Figure 2-4), where hot caustic (50 percent sodium hydroxide) is added to degrade the tetrytol high explosive. The EBH produces solid material, liquid energetics hydrolysate, and offgas. The solid product of the EBH consists of metal from the bursters, which is then heated in the MPT (BPBGT, 2007).[15] The decontaminated metal parts constitute a secondary waste that is very similar to the decontaminated projectile casings described earlier. Gaseous effluent from the OTM is likewise treated as described in the section on GB and VX projectiles.

[12]Sam Hariri, lead process engineer, BGCAPP, "Process design overview," presentation to the committee, January 23, 2008.

[13]Yu-Chu Yang, Assembled Chemical Weapons Alternatives program, "Chemical compositions of liquid HT, solid HT, liquid H and solid H," presentation to the Mustard Working Group Meeting, September 23, 2003.

[14]Yu-Chu Yang, ACWA program, "Chemical compositions of liquid HT, solid HT, liquid H and solid H," presentation to the Mustard Working Group Meeting, September 23, 2003.

[15]Sam Hariri, lead process engineer, BGCAPP, "Process design overview," presentation to the committee, January 23, 2008.

Copyright © National Academy of Sciences. All rights reserved.

Review of Secondary Waste Disposal Planning for the Blue Grass and Pueblo Chemical Agent Destruction Pilot Plants
http://www.nap.edu/catalog/12210.html

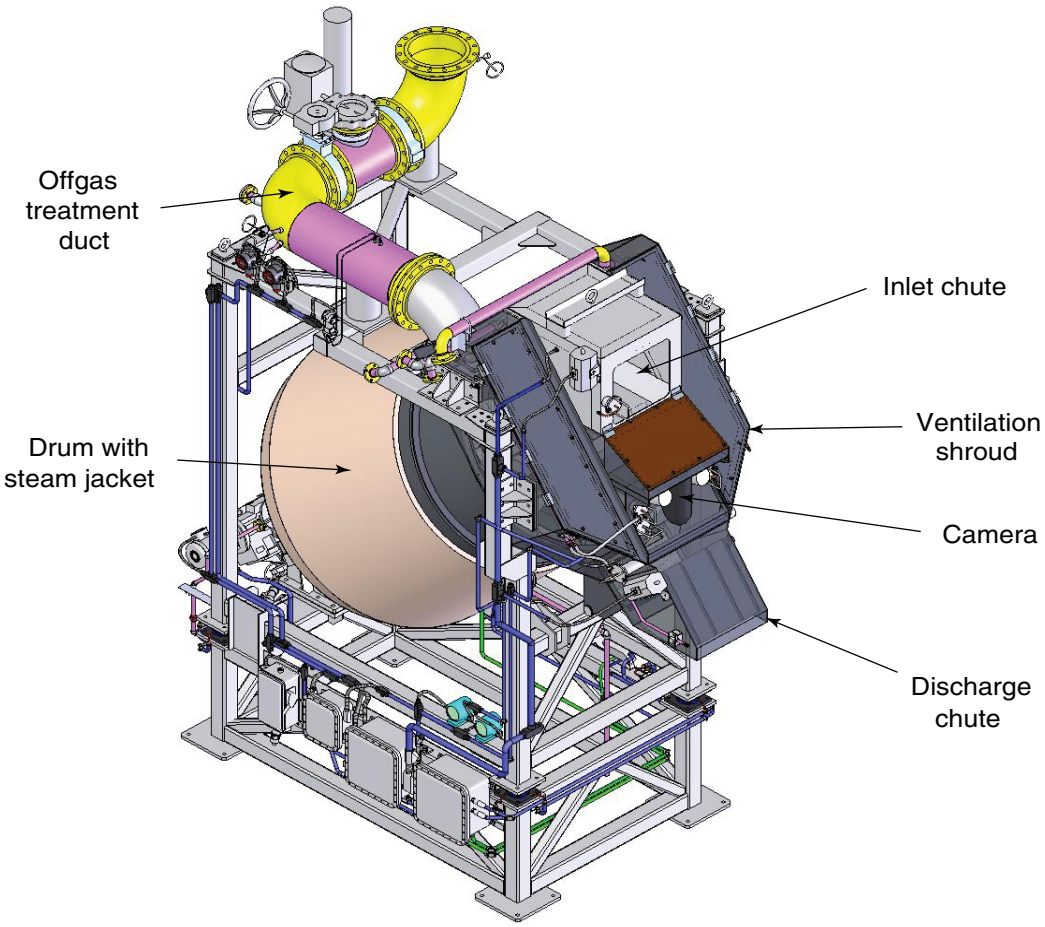

FIGURE 2-4 Energetics batch hydrolyzer. SOURCE: PMACWA, May 20, 2008.

The energetics hydrolysate produced by the EBH consists of a highly alkaline solution containing nitrate, nitrite, acetate, and formate salts (and glycerol as well when propellant from M55 rockets [see next section] is being processed). After separation of the solids, the energetics hydrolysate is moved to an energetics neutralization system (ENS) (BPBGT, 2007).[16] It is likely that all energetics will be destroyed in the EBH, and differential scanning calorimetry is to be performed on the energetics hydrolysate once it is in the ENS reactor to ascertain that this is the case (NRC, 2005b). Once the energetics hydrolysate within the ENS has been cleared, it is sent to energetics hydrolysate storage before going through an aluminum filtration system (AFS),[17] from which the liquid effluent then goes to the SCWO reactor.

Gaseous Effluent from Energetics Processing

Processing units dedicated to treatment of the projectile bursters produce offgas, which is an important effluent stream that requires processing. Offgas is produced by the EBH, the ENS reactor, and the bulk oxidizer unit. These three streams are fed into the energetics offgas treatment system (OTE), which consists of a venturi scrubber tower system that uses acid to remove ammonia. Effluent from the energetics OTS includes excess scrubber water, which constitutes a secondary waste, and offgas. The offgas is sent through a particulate filter, and the particulate filter medium is another secondary waste. After the gaseous effluent has traversed a heater and a scrubber, a blower forces it through filter banks consisting of activated carbon and a high-efficiency particulate air (HEPA) filter, both of which become a secondary waste.

GB- or VX-Filled M55 Rockets

The M55 rockets are filled with either GB or VX and are configured with the propellant-filled rocket motors and the rocket warhead. Each rocket is in its own shipping and

[16]Sam Hariri, lead process engineer, BGCAPP, "Process design overview," presentation to the committee, January 23, 2008.

[17]The AFS is covered in the next section, on M55 rockets with GB and VX fills.

Copyright © National Academy of Sciences. All rights reserved.

Review of Secondary Waste Disposal Planning for the Blue Grass and Pueblo Chemical Agent Destruction Pilot Plants
http://www.nap.edu/catalog/12210.html

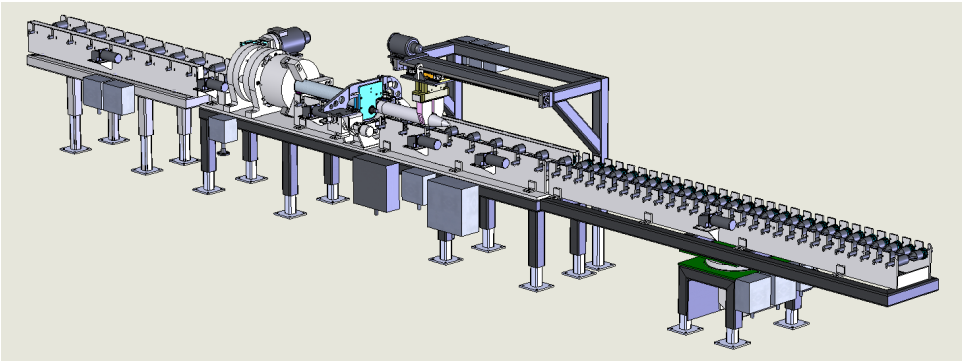

FIGURE 2-5 Rocket cutting machine. SOURCE: PMACWA, May 20, 2008.

firing tube (SFT) when delivered from storage to the munitions demilitarization building of BGCAPP. The warhead contains both energetic bursters and chemical agent fill. With the rocket still in the SFT, the warhead is separated from the rocket motor by the rocket cutting machine (see Figure 2-5), which uses a pipe-cutter-type mechanism to effect the separation. The section of the SFT that houses the warhead is also removed at this point. Noncontaminated rocket motors, which comprise a secondary waste stream, are sent to storage for shipment offsite and subsequent disposal. Noncontaminated SFTs will be disposed of offsite at a Toxic Substances Control Act (TSCA)-permitted commercial facility.[18]

The warheads are sent to the rocket shear machine (RSM) (see Figure 2-6), where they are first punched in the top and bottom of the rocket agent cavity to drain the agent, and a high-pressure warm-water stream is used to remove any solidified heels or residuals. The agent and washout water are then sent to the agent collection storage. The drained rockets' warheads (and, where applicable, contaminated rocket motors) are then chopped at three additional locations by the guillotine-like blade of the RSM (NRC, 2005b). Process water is used during this cutting.

Only about 200 of the M55 rockets stored at BGAD are expected to have rocket motors that are contaminated with agent due to leakage.[19] The motors and warheads of contaminated rockets are fed to the RSM, where they are sectioned such that they fit into the MPT. The contaminated SFTs are sent to the MPT for further treatment, generating solid and gaseous product streams similar to those described previously.[20]

After the agent has been drained, the rocket warhead components are fed to the EBH in a fashion similar to that for the projectiles, bursters, and empty agent cavities. Energetics are from the rockets' warhead segments, burster charge segments, and fuzes, and when necessary, contaminated motor segments. The burster energetics for the M55 rockets are much different from the tetrytol found in the mustard agent H munitions: They include lead styphnate, lead azide, barium nitrate, antimony sulfide, tetracene, lead azide, RDX, calcium resinate-graphite, and TNT. The propellants are usually processed separately from other energetics and are expected to be effectively hydrolyzed by the EBH. In addition to the energetics, there will be other materials, including the firing tubes and rocket cavities.

The operational sequence of the EBH is as follows: Motor segments from contaminated rockets are separated from the warhead and tailfin pieces and delivered to an EBH. Then water and a caustic solution are added to the EBH, after which the rocket motor segments are added and processed for 2 hours. Warhead and tailfin segments are then added and processed for 4 hours. Undissolved materials consisting of SFT pieces, burster walls, and metal parts from the rockets are then removed from the EBH. After all the solids have been removed, EBH rotation speed is increased to remove hydrolysate, which is sent to the ENS reactor. Hydrolysate in the ENS reactor is sampled and tested by differential scanning calorimetry to verify that organics have been destroyed to acceptably low levels. When the energetic materials are determined to be well below the level at which the hydrolysate would pose an explosion hazard, the hydrolysate is transferred to storage tanks. Metal parts from the EBHs are sent to the MPT, where they are heated to 1000°F for at least

[18]The use, storage, and disposal of PCBs are regulated by the Environmental Protection Agency (EPA) under the Toxic Substances Control Act and 40 CFR, Part 761. PCB waste handlers, including some generators, transporters, commercial storers, and disposers of PCB wastes, must notify EPA of their PCB waste activities, and each receives a unique identification number. Any PCB disposal facility must obtain approval of the EPA regional administrator for the region in which the facility is located (40 CFR 761.77).

[19]Roger Dickerman, systemization manager, BGCAPP, "Secondary waste streams," presentation to the committee, January 23, 2008.

[20]At the time this report was prepared, BGCAPP did not have approval from EPA Region 4 to treat PCBs and is not included under the national approval granted by the EPA for the incinerators at the four other stockpile disposal facilities under the U.S. Army's Chemical Materials Agency (CMA).

Copyright © National Academy of Sciences. All rights reserved.

Review of Secondary Waste Disposal Planning for the Blue Grass and Pueblo Chemical Agent Destruction Pilot Plants
http://www.nap.edu/catalog/12210.html

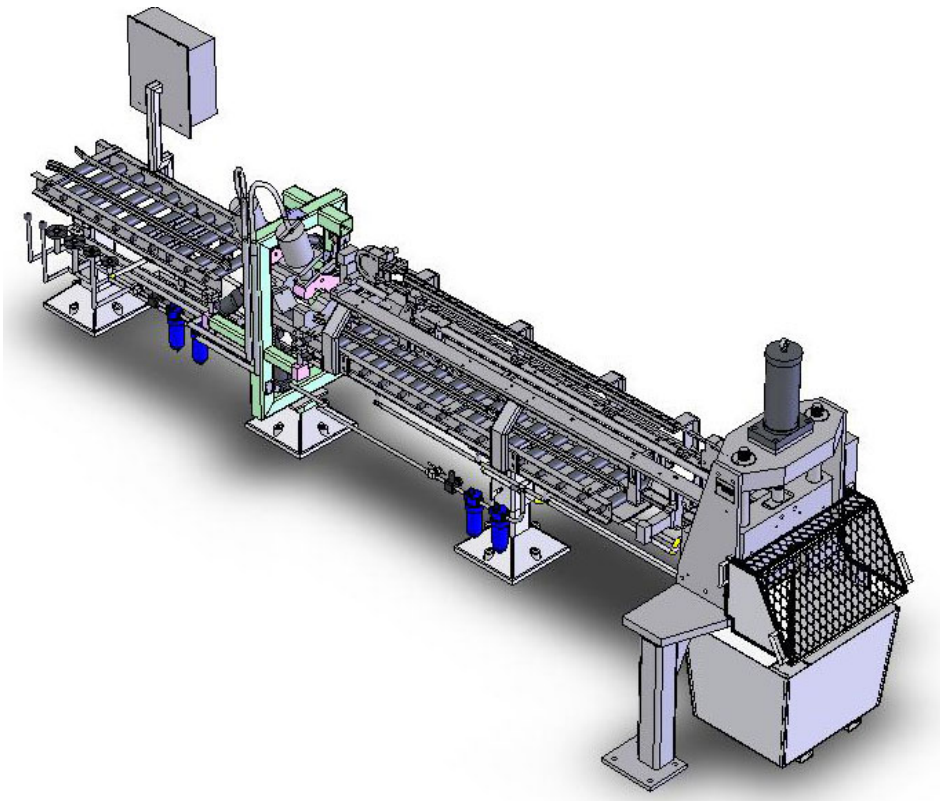

FIGURE 2-6 Rocket shear machine. SOURCE: PMACWA, May 20, 2008.

15 minutes, then cooled and sent to storage for offsite disposal. The secondary waste stream that is the solid product of the MPT may contain the toxic metals lead, barium, and antimony.

Before the energetics hydrolysate is treated by SCWO, it is first sent to the AFS, where 75 percent phosphoric acid, 35 percent hydrochloric acid, and 93 percent sulfuric acid are added to precipitate the aluminum. The treated rocket components account for the largest fraction of aluminum-bearing wastes, but energetics hydrolysate from other H-containing rounds is also sent through the AFS.[21] Most of the aluminum must be removed before treatment in the SCWO reactor because it generates solids that would precipitate in the SCWO reactor and interfere with its operation. The precipitated aluminates are separated by filtration, and the filtrate cake residue from the AFS is also a secondary waste. The separated liquid is sent to the energetics hydrolysate blend tank and then to the SCWO reactor for final treatment.

Nonprocess Secondary Wastes

Substantial dunnage will be generated by operation of BGCAPP. Dunnage includes wood pallets, other combustible solids, and metallic solids. Dunnage and other nonprocess secondary wastes will be segregated into contaminated and noncontaminated materials, as determined by enhanced onsite container monitoring prior to opening. Noncontaminated wood pallets will be shipped offsite without treatment for disposal by appropriate methods to minimize waste. All wood pallets and other dunnage associated with leaking munitions will be treated as agent-contaminated dunnage and will be decontaminated to meet the airborne exposure limits (BPBGT, 2004) set in an approved waste analysis plan (WAP) (BPBGT, 2007).[22] Additional waste streams include DPE suits and spent carbon filters from the offgas treatment described above. Agent-contaminated (i.e., spent) activated carbon is to be shipped offsite for further treatment and disposal at a permitted treatment, storage, and disposal facility (TSDF). Activated carbon that is not contaminated with agent will be managed by appropriate methods to minimize waste (BPBGT, 2007).[23]

PCAPP PROCESS DESCRIPTION

This section describes the PCAPP process being designed by Bechtel National, Inc., to destroy the chemical weapons stockpiled at PCD according to the configuration

[21]Sam Hariri, lead process engineer, BGCAPP, "Process design overview," presentation to the committee, January 23, 2008.

[22]Specifically, see Sections 3.1.5 and 4.3 of the cited reference.

[23]Specifically, see Sections 3.1.5 and 4.3 of the cited reference.

Copyright © National Academy of Sciences. All rights reserved.

Review of Secondary Waste Disposal Planning for the Blue Grass and Pueblo Chemical Agent Destruction Pilot Plants
http://www.nap.edu/catalog/12210.html

information available to the committee when this report was being prepared. A process flow diagram is given in Figure 2-7. It is worthwhile noting that PCAPP will process only munitions filled with mustard agent HD or HT. No munitions containing nerve agent are stored at PCD.

The destruction processes for chemical munitions at PCAPP will involve (1) transfer and disassembly of munitions to access the chemical agent and energetic materials, (2) core processes that destroy the agent, and (3) residuals treatment processes that decontaminate the munitions bodies and other materials associated with the munitions. These processes are accomplished in the major steps described in the following sections. The equipment used for projectile disassembly and removal of the agent is the same as that used for the mustard agent munitions at BGCAPP.

The munitions are disassembled to separate the agent-containing portions from the energetic materials and their associated metal parts. Energetics that are not contaminated with agent will be separated and prepared for shipment to appropriate offsite destruction and disposal facilities. Agent is drained from the munition bodies using hot, high-pressure water in the MWS. Contaminated energetics will be destroyed through an explosive destruction technology (EDT) that remains to be selected.[24]

During disassembly of the munitions, the main waste streams that call for further processing are as follows:

- The chemical agent drained from the munition cavities;
- The energetic materials, which may include propellants, bursters, igniters, and fuzes, and their associated metal parts;
- Metal munitions casings and their associated metal parts;
- Dunnage, most of which is not contaminated with agent;
- Process offgas streams and air from the facility's HVAC system; and
- Filters used during offgas treatment (carbon, HEPA, etc.).

In the core disposal operations that follow disassembly, the chemical agents are destroyed by hydrolysis, which is in turn followed by a secondary biotreatment process in immobilized cell bioreactors (ICBs) to treat the streams resulting from the hydrolysis (the hydrolysates) to meet Chemical Weapons Convention requirements and produce environmentally acceptable wastes.

[24]An EDT involves using controlled explosive charges in an enclosed chamber. There are several versions of this technology. The Resource Conservation and Recovery Act (RCRA) permit for PCAPP provides for the use of an EDT. A forthcoming National Research Council report will examine the applicability of the various types of EDTs for use at PCAPP and, possibly, BGCAPP. The secondary waste from these EDTs is outside the scope of this report.

Metal parts such as the projectile casings are treated by being heated in the munitions treatment unit (MTU) to a set temperature (at least 1000°F) for a specific duration (at least 15 minutes) to decompose any residual agent and energetics.

Most agent-contaminated secondary wastes will be treated in an autoclave or supplemental decontamination unit (SDU) to destroy the agent. All offgases from PCAPP processes, including the offgases from storage vessels used during these processes, will be treated to ensure that the offgas streams are at or below regulated levels for agent and other contaminants before release directly to the atmosphere.

Unless otherwise noted, the following discussion is based on the RCRA Stage III, Class 3, permit modification request and the associated WAP (PMACWA, 2006). The plan has been filed with, but not yet approved by, the Colorado Department of Public Health and Environment (CDPHE) as of the preparation of this report (see Chapter 3 for further discussion of the PCAPP WAP).

Energetics Removal, Treatment, and Shipment

The projectiles (105- and 155-mm) and 4.2-inch mortar rounds stored at PCD contain HD and some mortar rounds contain HT. Some 105-mm projectiles have been reconfigured to remove the propellant and fuze but retain a burster and nose plug. Unreconfigured 105-mm projectiles with integral fuzes and bursters are contained in sealed tubes with bags of propellant, two tubes to a box. All of the 155-mm projectiles have been reconfigured to contain lifting plug and burster but no fuze. The 4.2-inch mortar with integral fuze, burster, propellant wafers, and ignition cartridge are contained in sealed tubes, two tubes to a box (NRC, 2005a).

The munitions are brought from storage to the energetics reconfiguration building (ERB) in overpack (enclosed) pallets via the munitions service magazine. The air in each overpack pallet is monitored after transport to determine whether there are any leaks. If no leak is found, the pallets are removed from the overpack and moved by a forklift into the ERB. The pallets are manually unpacked; the boxes of the unreconfigured 105-mm projectiles and the 4.2-inch mortars are opened; the munitions, contained in sealed fiber shipping tubes, are then removed from the boxes. The interior of each tube is monitored for agent. If a leak is found, the munitions are overpacked and returned to storage for later onsite treatment by the yet-to-be-selected EDT. Munitions determined to be leaking in storage or during transport to the ERB will also be processed by the EDT.

Munitions that are found not to be leaking are manually removed from the shipping tubes. In the case of the 105-mm projectiles, the propellant bags are separated from the munitions. The 4.2-inch mortars are disassembled to remove the ignition cartridge, propellant wafers, and miscellaneous metal parts. Secondary wastes from this operation will include uncontaminated propellant bags and wafers, ignition cartridges, and miscellaneous metal parts.

Copyright © National Academy of Sciences. All rights reserved.

Review of Secondary Waste Disposal Planning for the Blue Grass and Pueblo Chemical Agent Destruction Pilot Plants
http://www.nap.edu/catalog/12210.html

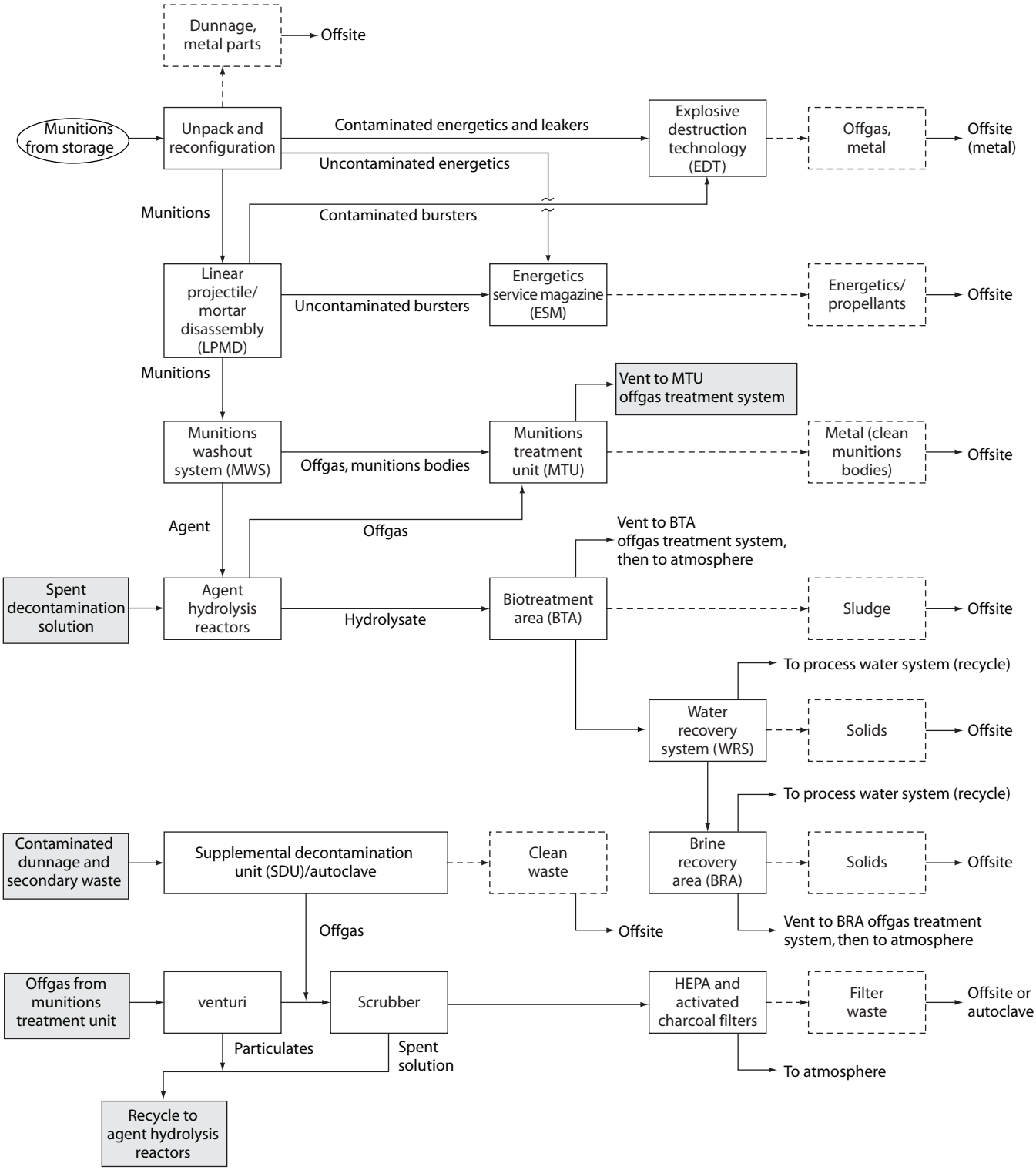

FIGURE 2-7 Process and waste stream diagram for PCAPP.

Copyright © National Academy of Sciences. All rights reserved.

Review of Secondary Waste Disposal Planning for the Blue Grass and Pueblo Chemical Agent Destruction Pilot Plants
http://www.nap.edu/catalog/12210.html

The previously reconfigured munitions (no fuzes) and the partially reconfigured munitions (as described above, with fuzes) are moved into an explosive containment room, where nose plugs, fuzes, boosters, and bursters are removed by the LPMD machine robot. The empty burster well is sampled to determine if a leak has occurred; if no leak has occurred, the bursters and fuzes will be shipped offsite to a commercial TSDF. If a leak has occurred in the burster well, the munitions are overpacked for treatment by the EDT.[25] Munitions that cannot be processed successfully by the LPMD machine robot—that is, rejects—will be containerized and treated by the EDT.

The ERB HVAC will be vented downstream of the OTS to the agent filter area (AFA).

Agent Hydrolysis and Munitions Body Treatment

A munitions body, having been separated from the energetics, still contains agent sealed in its agent cavity by the burster well. The munitions are next moved to the cavity access machine in the agent processing building (APB). There, the burster well of each projectile is buckled (or, in the case of mortar shells, the mortar base is cut) to access the agent. The agent is drained and the cavity washed with warm, high-pressure water to rinse out any gelled agent or residue. The munitions bodies are then sent to the MTU (see Figure 2-8), where they are heated to at least 1000°F by external heating coils.

Drained agent, wash water, and any suspended solids are fed to agent/water separators. The separated water is recycled to the washout station, and the concentrated agent is sent to a hydrolysis reactor, where it is neutralized with hot (194°F) water. Hydrolysis is completed by the addition of NaOH. The neutralized solution is then sent to a storage tank, where it will be sampled for the presence of residual mustard. The clearance criterion is "nondetect," which is defined as ≤20 ppb for HD and ≤200 ppb for HT. If the batch is not accepted, the hydrolysate is recycled to the hydrolysis reactor. The agent collection and neutralization components are vented to the OTS.

Spent decontamination solution is generated throughout the APB for decontamination of equipment and personnel. The spent decontamination solution is collected in sumps and pumped to the agent hydrolyzers.

The SDU and the Autoclave

The SDU is used to treat secondary wastes from various activities, including general maintenance, equipment maintenance, worker safety measures, and sampling. Typical secondary waste streams treated are DPE suits and other personal protective equipment; sampling equipment; tools, drums, and other containers; and dunnage. The SDU is a large electrically heated chamber approximately 12 feet wide, 6.5 feet deep, and 8 feet high (interior dimensions). Once it has been loaded, the operators select the correct operating conditions (time and temperature) for the materials. The temperature can be varied from 195°F to the design temperature of 600°F. During treatment, any agent that volatilizes but does not decompose is treated in the OTS along with other gases. After the SDU has cooled, the decontamination level of the treated material is confirmed by monitoring. It is then unloaded from the SDU and packaged for offsite shipment. The monitoring capability of the SDU will be used to evaluate some wastes for suitability for offsite shipment. The criterion for reclassification as "clean" for offsite shipment is a vapor screening level (VSL) of less than 1.0, whether determined in the SDU or by container headspace monitoring (PMACWA, 2006).[26]

The autoclave is another PCAPP component used to treat wastes from the same kinds of activities. As this report was being prepared, a descision on which wastes would go to the SDU and which to the autoclave had still not been made. The autoclave has a working space approximately 4 feet wide, 7 feet deep, and 7 feet high. Once it has been loaded, the operators select the correct operating conditions (time and temperature) for the materials. Air is evacuated during preheat cycles to promote the vaporization of liquids (BPT, 2007). The autoclave is heated by steam at approximately 350°F to promote hydrolysis of the agent. During treatment, any agent that volatilizes but does not decompose, along with other gases, is treated in the OTS. After treatment, the autoclave is cooled and dried by a vacuum pump. If the treatment is successful, as indicated by monitoring, the material is unloaded from the SDU and packaged for shipment offsite.

OTS and AFA

The purpose of the OTS is to quench and neutralize acidic gases and remove particulates from the offgas streams of the MTUs, the APB tanks, the SDU, and the autoclave. The OTS consists of a venturi scrubber tower, offgas filter, offgas reheater, and offgas blower. Offgases treated in the OTS are directed to the AFA for further treatment before discharge to the atmosphere. The MTUs vent gases at approximately 650°F. The gases are rapidly quenched by caustic solution to approximately 120°F in the venturi. Some particulates are removed from the gas in the venturi discharge liquid. The cooled gas and the discharge liquid flow to the scrubber tower, where the acid gases are absorbed and neutralized by a counterflow stream of water and caustic. The offgas from the SDU and the autoclave are also treated in the scrubber tower. Spent scrubber liquid (containing particulates) is pumped to the spent decontamination solution tanks. The scrubber offgas is filtered by the offgas filter to remove particulates

[25]Discussion of PCAPP secondary wastes with Craig Myler, chief process engineer, Bechtel Pueblo Team, February 12, 2008.

[26]Specifically, see Section C-2b-1, page C-13, of the cited reference.

Copyright © National Academy of Sciences. All rights reserved.

Review of Secondary Waste Disposal Planning for the Blue Grass and Pueblo Chemical Agent Destruction Pilot Plants
http://www.nap.edu/catalog/12210.html

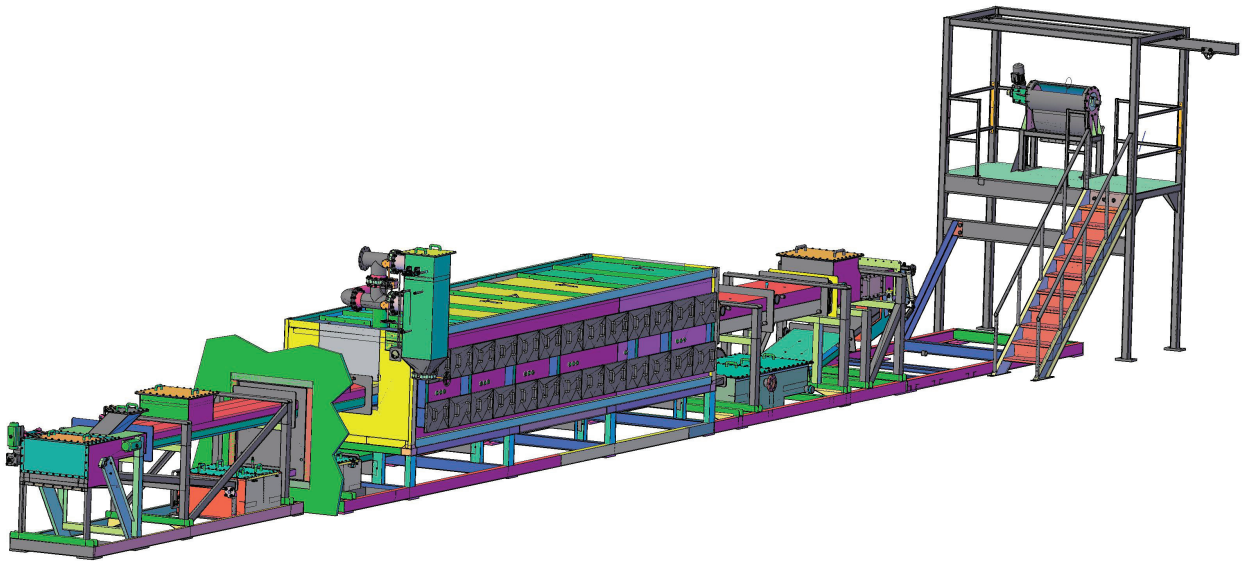

FIGURE 2-8 Munitions treatment unit. SOURCE: PMACWA, May 20, 2008.

greater than 0.5 micron. To prevent condensed droplets from entering the offgas blower, the filtered offgas is heated to reduce the relative humidity. The blower sends the treated offgas to the AFA.

The AFA is common to the ERB and the APB and consists of 10 filter units, 8 in operation and 2 in standby. Each filter unit consists of a particulate prefilter, a HEPA filter, an activated carbon filter for removal of agent vapor and volatile organic compounds (VOCs), five backup activated carbon filters in the event of breakthrough, and a final HEPA filter. Filtered air is exhausted into a common header and ducted to a common stack. There will be secondary waste in the form of spent activated carbon and filter media.

Biotreatment

Hydrolysate that has been cleared for agent content, various condensates, and process water is collected in one of three 30-day storage tanks. The pH is adjusted with sodium hydroxide as needed, and nutrients (principally nitrogen in the form of ammonium salts or urea, as well as phosphorus) are added before the hydrolysate is fed to one of six ICB module feed tanks. Each module consists of four ICB units. The principal product of mustard agent hydrolysis is thiodiglycol, and the ICB system biodegrades thiodiglycol and other organic constituents to innocuous end products, principally carbon dioxide, water, sulfate, and other oxidized mineral chemicals.

Important ICB environmental conditions include nutrient concentration, feed rate, temperature, pH (adjusted with nitric acid or sodium hydroxide), and dissolved oxygen (supplied by compressed air blowers). Each ICB module will discharge to an associated ICB effluent tank, where the discharge will be sampled to verify the satisfactory performance of the biotreatment. Acceptable performance for the biodegradation process is the removal of more than 95 percent of thiodiglycol, with the goal being to remove 99 percent or more of thiodiglycol and an average of 90 percent or more of total organic compounds (PMACWA, 2006).[27] If biodegradation is insufficient, the effluent will be recycled to the ICB module feed tank for further treatment; otherwise, the effluent will be discharged to the water recovery system (WRS). The ICB discharges are gases to the biotreatment area (BTA) OTS, liquids to the WRS, and secondary waste solids (sludges and other residues), which will be periodically removed.

The 30-day storage tanks vent through dedicated local activated carbon filters to the atmosphere. The remaining biotreatment tanks, including the ICBs, vent to the BTA OTS. The ICB liquid phase contains odiferous components that partition to the gas phase and vent to the BTA OTS. The BTA OTS (not shown in Figure 2-7) will have six trains, one for each ICB module. The principal components of each train are (1) two iron sponge absorbers to remove volatile odorous inorganic and organic sulfur compounds such as hydrogen sulfide, mercaptans, and thiols; (2) a heater to lower the relative humidity before the carbon adsorption system; (3) an activated carbon system consisting of a prefilter (to remove solid particles in order to extend the activity and life of the carbon adsorption bed), two activated carbon filters in series to remove potentially odorous gaseous compounds and other VOCs not removed by the iron sponges, and a final HEPA

[27]Specifically, see page C-11 of cited reference.

Copyright © National Academy of Sciences. All rights reserved.

Review of Secondary Waste Disposal Planning for the Blue Grass and Pueblo Chemical Agent Destruction Pilot Plants
http://www.nap.edu/catalog/12210.html

filter (to prevent carbon particles from escaping the unit); (4) an exhaust blower and stack; and (5) two iron sponge absorber condensate pumps to pump condensate to the clarifiers of the WRS via the ICB effluent tanks. The BTA OTS produces secondary waste from the iron sponge absorber and secondary wastes from the prefilter, the HEPA filter, and the activated charcoal filter secondary wastes.

Water Recovery and Brine Reduction

The cleared ICB effluent is approximately 98 wt percent water, 0.8 wt percent sodium sulfate, 0.7 wt percent sodium chloride, and traces of agent impurities and degradation products (PMACWA, 2006). The WRS and the brine reduction system (BRS) reclaim water from the biotreatment system effluent and the blowdown from both the cooling tower and the steam boiler. In addition, some process water passes through an RO system to feed the steam boilers and munitions washout system; the retentate is fed to the WRS.

The WRS includes two clarifiers, two thickeners, two filter presses, and auxiliary equipment. The ICB effluent is transferred to the WRS clarifiers, where a polymer will be injected to provide chemical coagulant for enhancing removal of suspended solids. The clarified effluent will be transferred to the BRS. The clarifier sludge will be pumped to the WRS thickeners, where a polymer may be added to enhance thickening. Thickener overflow is recycled to the clarifiers, and underflow is pumped to the dewatering filter presses. The filter press separates the solids from the liquid stream. The liquid is recirculated to the clarifiers, and the filter cake, containing 20-25 percent dry weight solids, is a secondary waste.

The BRS includes a feed conditioning system, two brine concentrators, two evaporator/crystallizers, two distillate liquid-phase carbon filters, three solids dewatering units, and an offgas treatment system (BRS OTS) (not shown in Figure 2-7). The BRS feed conditioning system converts carbonate salts to carbon dioxide, which is then removed so that carbonate scale does not form and foul downstream process equipment. Feed is conditioned by heating and acidifying it, followed by steam stripping of the carbon dioxide, noncondensable gases, and some VOCs. The stripped gases are transferred to the BRS OTS, and the liquid effluent is transferred to caustic mixing tanks, where the pH is increased by the addition of sodium hydroxide to reduce corrosion in downstream equipment. The effluent from the mixing tanks is distilled in the brine concentrator, and about 80 percent of the fed effluent is distillate transferred to the liquid-phase carbon filter unit and, finally, to the process water tanks. The brine concentrator vapor effluent comprises steam and noncondensable gases, which are combined with the steam stripper overhead and vented to the BRS OTS. The brine concentrator underflow contains essentially all of the nonvolatile material, salts, residual organic compounds, and suspended solids. These materials are extracted by the evaporator/crystallizer units: Water is transferred to the liquid-phase carbon filters and finally to the process water tanks, noncondensable vapor is transferred to the BRS OTS, and the solids (as a slurry) are dewatered to produce a solid cake for shipment to an offsite TSDF as a secondary waste.

In summary, the WRS and BRS produce process water, vapor to the BRS OTS, and secondary waste in the form of a solid cake for shipment to an offsite TSDF. It is planned that the BRS OTS filter cake will be analyzed for toxicity characteristic leaching procedure (TCLP) organics (volatile and semivolatile constituents) and metals. In addition, the filter cake is planned to be tested for free liquids to ensure the dewatering has removed liquids in accordance with land disposal restrictions (PMACWA, 2006).[28] The BRS OTS is, for the purposes of this report, identical to the BTA OTS except that there are no iron sponge absorbers or condensate pumps. The BRS OTS produces prefilter, HEPA, and charcoal filter secondary wastes.

[28]Specifically, see page C-14.

Copyright © National Academy of Sciences. All rights reserved.

3

Regulatory Requirements Applicable to BGCAPP and PCAPP Secondary Waste Management

This chapter describes federal and state regulations relevant to secondary waste management at BGCAPP and PCAPP that must be satisfied and examines compliance with these requirements at the time this report was being prepared.

FEDERAL REGULATORY FRAMEWORK FOR BGCAPP AND PCAPP OPERATIONS

The accumulation, treatment, storage, and disposal of hazardous wastes are regulated under the Resource Conservation and Recovery Act (RCRA) and the Hazardous Solid Waste Amendments of 1984. Wastes derived from the management and destruction of chemical agents and munitions—i.e., "secondary wastes"—must be assessed against them and the applicable state regulations, and, if determined to be hazardous, must be managed under them.

The U.S. Environmental Protection Agency (EPA) authorizes states to regulate hazardous wastes within their borders under RCRA using provisions that are no less stringent than the requirements adopted by the EPA (40 CFR 271). Kentucky and Colorado, as well as all of the states with currently operating chemical agent disposal facilities, have obtained EPA authorization to implement and enforce state requirements for the management of hazardous waste.

Each of these states has adopted the basic EPA hazardous waste management program, including regulations for identification and listing of hazardous wastes; requirements applicable to generators and transporters of hazardous waste; requirements for facilities that treat, store, or dispose of hazardous waste; and restrictions for the land disposal of specific hazardous wastes.

Each state has a program for granting permits for the construction and operation of treatment, storage, and disposal facilities (TSDFs). Permits establish appropriate site-specific conditions for all aspects of the hazardous waste management and destruction processes used. Secondary waste from the two chemical agent disposal facilities covered in this report is also governed by the TSDF regulations and requirements established by the respective states in which these facilities are located.

Waste Characteristics and Listing

There are two types of regulated hazardous waste: "characteristic" wastes and "listed" wastes. A solid waste is classified as a characteristic hazardous waste if it exhibits any of the following properties: ignitability, corrosivity, toxicity, or reactivity. A solid waste is a "listed" hazardous waste if it is specifically listed by the EPA or a state regulatory body based on established criteria (40 CFR 261.11).

Phosgene is the only chemical agent that is a listed hazardous waste under the federal RCRA program. It is listed in the category "acute hazardous waste, commercial chemical, or manufacturing chemical intermediate" (Hazardous Waste Code[1] P095). Mustard agent is the only chemical agent included as a hazardous constituent under 40 CFR 261.11.[2] Therefore, it can be considered for listing by the EPA or state regulatory authorities, but it is not currently a federally listed waste.

One of the important differences between characteristic hazardous wastes and listed hazardous wastes is that, under RCRA regulations, any wastes derived from the treatment,

[1]A hazardous waste code, consisting of a letter followed by three numbers, is assigned by the EPA or the state regulatory agency to each listed waste. The code is associated with a specific type of listed waste. The F list (e.g., Fxxx) designates particular solid wastes from certain common industrial or manufacturing processes as hazardous. Because the processes producing these wastes are found in different sectors of industry, the F list wastes are known as wastes from nonspecific sources. The P list (e.g., Pxxx) addresses pure or commercial-grade formulations of certain specific unused acutely hazardous chemicals.

[2]Appendix VIII of 40 CFR 261.11 identifies the universe of hazardous constituents of concern and is used by EPA primarily to identify wastes that should be considered for listing. It consists of chemicals that have toxic, carcinogenic, mutagenic, or teratogenic effects on humans or other life forms.

Copyright © National Academy of Sciences. All rights reserved.

Review of Secondary Waste Disposal Planning for the Blue Grass and Pueblo Chemical Agent Destruction Pilot Plants
http://www.nap.edu/catalog/12210.html

storage, or disposal of a listed hazardous waste (e.g., treatment residues or secondary wastes from storage) are themselves regulated as a listed hazardous waste. In addition, any mixture of a solid waste and a listed hazardous waste is also designated as a hazardous waste. The listed hazardous waste designation applies regardless of the actual hazardous characteristics of the waste. Unlike listed hazardous wastes, wastes that exhibit one or more of the RCRA characteristics are not subject to the mixture or derived-from rules. Once these "characteristic wastes" no longer exhibit the characteristic, they are no longer hazardous wastes and may be managed under the less stringent rules for nonhazardous solid wastes.

Scrap Metal Exclusion

EPA regulations for scrap metal are not straightforward. They provide that all "excluded scrap metal"[3] that is recycled is not a "solid waste," so that hazardous waste regulations do not apply (40 CFR 261.4(a)(13)). The regulations go on to state that all other scrap metal sent for recycling or reclamation is a solid waste and is therefore a hazardous waste if it exhibits any of the four characteristics or has become contaminated with a listed waste (40 CFR 261.2(c)). However, a later section exempts from RCRA regulation all hazardous scrap metal if it is sent for recycling or reclamation (40 CFR 261.6(a)(3)(ii)). Therefore, under the federal and most state RCRA regulatory schemes, all scrap metal going to recycling, whether or not it exhibits a characteristic or has become contaminated with a listed waste, is exempt from the hazardous waste regulations. No waste characterization is necessary for material that meets the definition of scrap metal that will be recycled. Scrap metal that is to be disposed of rather than recycled, however, is a "solid waste" and must be characterized and disposed of accordingly.

BLUE GRASS CHEMICAL AGENT DESTRUCTION PILOT PLANT

Applicable Kentucky Statutes and Regulations

The Kentucky Department of Environmental Protection (KDEP) regulations generally adopt the federal RCRA regulations on identification and listing of hazardous wastes (401 Kentucky Administrative Rules [KAR] 31:040). However, the KDEP regulations also incorporate the following state-specific listed wastes (KAR 31:040 Section 7: Additional Requirement Concerning Nerve and Blistering Agents):

- GB, isopropyl methylphosphonofluoridate and related compounds (Hazardous Waste Code N001);
- VX, O-ethyl-S-(2-diisopropylaminoethyl)-methyl phosphonothiolate and related compounds (Hazardous Waste Code N002); and
- H, bis(2-chloroethyl) sulfide and related compounds (Hazardous Waste Code N003).[4]

On September 30, 2005, the KDEP issued to Blue Grass Army Depot (BGAD) and Bechtel Parsons Blue Grass a research, development, and demonstration (RD&D) permit (KY8-213-820-105) to construct, test, and operate a facility designed to destroy chemical munitions containing the nerve agent GB and related waste using neutralization technology. The permit is limited to processing chemical munitions and related wastes containing the nerve agent GB. A standard RCRA permit will be required for the treatment of munitions containing the nerve agent VX and mustard agent H. Typically, a RCRA permit granted under a Part B permit application has a fixed processing scheme and operating conditions that are established before the start of operations, while an RD&D permit provides more flexibility in developing and proving out the processing scheme and operating conditions. In granting the RD&D permit, it was the opinion of the KDEP that the RD&D process is appropriate for the following reasons:

- Chemical agent neutralization is a proven technology. The facility operators intend to demonstrate that the various process components at BGCAPP can function together in a commercial-scale facility.
- The permit has performance-based conditions, such as requiring 99.9999 percent destruction efficiency (DE) of the chemical agent. No process parameters are prescribed. This allows the facility to develop the appropriate parameters (such as time and temperature) based on research data collected on the initial and subsequent real-world neutralization batches while still meeting the required DE.
- The risk to human health and the environment increases the longer aging chemical munitions remain in storage. Construction of hazardous waste treatment facilities cannot begin until a permit is issued. It was the opinion of the KDEP that adequate design information is already available, or will be available, in time to approve staged construction activities. The RD&D permit allows for construction activities to begin.

As this report was being written, the committee expected that the RD&D permit would be converted to a RCRA operating permit granted under a Part B permit application after the system had been demonstrated on GB and before other chemical munitions (VX or H) were to be disposed of.

[3]Excluded scrap metal includes processed scrap metal, unprocessed home scrap metal (steel mill scrap), and unprocessed prompt scrap metal (metal fabrication scrap) (40 CFR 261.1 (c)(9), (10), (11), and (12)).

[4]The N… code designations made by the KDEP are unique to Kentucky. This designation characterizes these wastes as special hazardous wastes.

Copyright © National Academy of Sciences. All rights reserved.

Review of Secondary Waste Disposal Planning for the Blue Grass and Pueblo Chemical Agent Destruction Pilot Plants
http://www.nap.edu/catalog/12210.html

A RCRA permit granted under a Part B permit application is the type of permit normally necessary for the operation of hazardous waste facilities, including chemical agent disposal facilities. Kentucky law (Kentucky Revised Statutes 224.50-130) requires that before this type of permit is issued, a proposed treatment or destruction technology must have been fully proven in an operational facility of scale, configuration, and throughput comparable to the proposed facility. For chemical agent disposal, Kentucky law allows for a proposed treatment or destruction technology to either (1) have been demonstrated as effective within the chemical weapons disposal programs as directed in Public Law 104-208 and other applicable federal laws or (2) provide assurance of destruction or neutralization at an efficiency of 99.9999 percent for each chemical agent that is proposed to be treated or destroyed.

In addition, monitoring data from an operational facility or alternative disposal program must show that the emissions from treatment and destruction facilities or fugitive sources present no more than a minimal risk of acute or chronic effect on human health or adverse environmental effect, as demonstrated by sufficient and applicable toxicological data. This requirement includes, but is not limited to, emissions of the chemical agents and products of combustion, incomplete combustion, and other processes alone or in combination. Moreover, an emergency response plan must have been submitted and approved after public notice and an opportunity for comments to be heard. To assure the ability of the community to respond to releases from such a facility, the plan must provide for sufficient training, coordination, and equipment for state and local emergency response personnel, including health, police, fire, and other responders. It must demonstrate a capability for evacuating prior to exposure all individuals who might be exposed to releases from the facility during a credible worst-case release or otherwise mitigating their exposure.[5]

BGCAPP Waste Analysis Plan

At the time this report was being prepared, no waste anaylsis plan (WAP) for BGCAPP had been developed, so the committee does not know definitively how the secondary waste at BGCAPP will be managed. Therefore, the following discussions rely on information from *Operations and Closure Agent-Contaminated Waste Disposal Estimate Summary Report* (BPBGT, 2006a), the fact sheet "Planning for Treatment or Disposal of Secondary Wastes" (PMACWA, 2008a), the RCRA RD&D permit application (BPBGT, 2007), and presentations and information received from BGCAPP or PMACWA personnel. Plans for the disposal of secondary wastes generated at BGCAPP call for the waste to be (1) shipped offsite to an approved TSDF or (2) treated onsite and then shipped offsite. Whether onsite treatment of secondary waste is needed depends on whether the waste is agent-contaminated on noncontaminated; on whether it meets airborne exposure limit guidance standards for offsite shipment,[6] which will be set in the permit; and on what may be required by the approved WAP.

A WAP must be filed with KDEP at least 18 months before the hazardous waste is delivered, which in the case of BGCAPP consists of the various chemical munitions to be destroyed. The WAP must be approved by KDEP prior to operations (401 KAR 34:030 Section 4(2)). It will detail the methods to be used for sampling, analysis, and clearance of all of the waste streams.

To date no such plan has been filed. The contractor at BGCAPP has stated that it plans to use "process knowledge as the primary means of characterization, with direct sampling and analysis used to verify process knowledge."[7] Few further details were available in the permit application for the committee to review and evaluate.

Finding 3-1. A detailed waste analysis plan for BGCAPP has not been developed or submitted for review and approval. Such a plan would detail sampling and analytical methods for each waste stream.

Recommendation 3-1. While the Bechtel Parsons Blue Grass Team and the Program Manager for Assembled Chemical Weapons Alternatives are not in violation of regulatory requirements and have ample time to meet the requirement to submit a waste analysis plan for BGCAPP 18 months prior to receipt of munitions at the facility, it would be prudent to develop and submit the plan as early as possible in order to determine the requirements that may be placed on the operations by the Kentucky Department of Environmental Protection and avoid unnecessary delays to the operation.

PUEBLO CHEMICAL AGENT DESTRUCTION PILOT PLANT

Applicable Colorado Statutes and Regulations

Colorado Department of Public Health and Environment (CDPHE) regulations generally restate the federal RCRA regulations on the identification and listing of hazardous wastes (6 Code of Colorado Regulations [CCR] 1007-3, Part 261). However, the CDPHE regulations also incorporate the following state-specific listed wastes:

[5]In determining the population and area of potential exposure during a worst-case release, all possible climatic conditions and population distributions must be assumed for the largest area where any exposure to the release could induce acute or chronic health consequences or environmental impact (KRS 224-50-130(3c)).

[6]This level is not the same as the target release level for release of treated process wastes from the various treatment trains (e.g., from the energetics batch hydrolyzer to the hydrolysate storage tanks).

[7]Kevin Regan, environmental manager, BGCAPP, "Process alternates for wastes," presentation to the committee, January 23, 2008.

Copyright © National Academy of Sciences. All rights reserved.

Review of Secondary Waste Disposal Planning for the Blue Grass and Pueblo Chemical Agent Destruction Pilot Plants
http://www.nap.edu/catalog/12210.html

- Bis(2-chloroethyl) sulfide [mustard, mustard agent, mustard gas, H, HD] (Hazardous Waste Code P909),
- Bis(2-chloroethyl) sulfide and bis(2-chloroethylthio)ethyl ether [mustard, mustard agent, mustard gas, HT, mustard T] (Hazardous Waste Code P910),
- O-isopropyl methylphosphonofluoridate (GB, sarin) (Hazardous Waste Code P911),
- Waste chemical weapons using or containing any chemical compound identified in Appendix VII of Part 261 as the basis for this listing; residues resulting from treatment of hazardous wastes with the codes P909, P910, and P911 are included in this listing (Hazardous Waste Code K901), and
- Any soil, water, debris, or containers contaminated through contact with waste chemical weapons listed as K901 or hazardous wastes listed as P909, P910, or P911 (Hazardous Waste Code K902).

CDPHE issued a permit (CO-04-07-01-01) to the U.S. Department of the Army and to Bechtel National, Inc., to build an RD&D hazardous waste treatment facility at the Pueblo Chemical Depot (PCD). The CDPHE found that an RD&D permit is appropriate for PCAPP because this treatment technology had already been demonstrated on a laboratory-scale basis. As in the case of BGCAPP, the overall objective of the RD&D permit is to authorize the construction and eventual testing of the processes and equipment that are to be used at PCAPP to destroy chemical munitions. The current permit allows for limited construction activities. Construction of the primary hazardous waste treatment units will require further authorization through subsequent modifications of the permit. Once the facility is built, has undergone thorough testing, and demonstrated its ability to treat chemical munitions in a way that adequately protects human health and the environment, full-scale operation of the facility will require approval through the standard Part B RCRA application permitting process. CDPHE expects this transition will not delay plant operations.[8]

The current RD&D permit allows for completion of Phase I and II construction. The Phase I permit, issued in 2004 and modified in 2006, covers site preparation. The Phase II permit, issued in 2005 and modified in 2006, covers support facilities. Phase I construction activities include the construction of site civil work such as grubbing, grading, drainage design, construction of underground utilities, roads, construction support facilities, and staging areas. Phase II construction activities will include installation of a variety of buildings and support systems ancillary to the primary permitted hazardous waste management units. Only limited treatment, storage, or disposal of hazardous waste is authorized under the RD&D permit. An application for the Phase III permit, covering process buildings, was submitted to CDPHE on December 1, 2006, and is currently under review.

In addition, PCAPP is required to obtain a certificate of designation (COD) from the Pueblo County Board of County Commissioners authorizing it to begin operations. The county grants such a certificate only after the CDPHE has reviewed and recommended approval of the specific facility (see CRS 30-20-100 and Pueblo County Code Section 17.176.090). The Department of the Army and Bechtel National, Inc., applied to the Board of County Commissioners for the Phase II COD for PCAPP to be located at the Pueblo Chemical Depot. The Board has determined that the phasing of the project and CODs is appropriate and has directed the phasing to be in the form of multiple applications and certificates generally paralleling the three stages of the RD&D permits and the three stages of construction, as outlined in the initial application for a COD. The Phase I and Phase II CODs were approved and issued by the Board of County Commissioners in 2004.

PCAPP Waste Analysis Plan

A WAP for PCAPP has been submitted to the CDPHE (PMACWA, 2006).[9] It covers both process and waste analysis and appears to have appropriate sampling and analytical discussions. For liquid streams in the process, proven analytical methods are incorporated that have been used before in the disposal of bulk mustard agent at the Aberdeen Chemical Agent Disposal Facility (Maryland). For other possible contaminants, analytical methods listed in EPA publication SW-846, *Test Methods for Evaluating Solid Waste, Physical/Chemical Methods*, are specified (EPA, 2007). For solid wastes, vapor screening is proposed for determination of agent concentration. Process and generator knowledge[10] is proposed to establish that certain materials are noncontaminated.

The plan was submitted well before the start of agent operations and was in the approval stage as this report was being prepared. This timely submission provides ample time for the CDPHE to review and approve the plan. It also allows time to negotiate any changes called for by the regulators at CDPHE.

Finding 3-2. The waste analysis plan for PCAPP was submitted in a timely manner for approval by the Colorado Department of Public Health and Environment.

[8]Meeting by a fact-finding team of the committee with CDPHE staff on February 14, 2008.

[9]See Attachment C of the PCAPP RCRA RD&D Stage III, Class 3, permit.

[10]Process and generator knowledge refers to an operator's understanding of the processes as well as other aspects of the operations of a facility.

Copyright © National Academy of Sciences. All rights reserved.

4

Status of Planning for the Management of Secondary Wastes at BGCAPP and PCAPP

This chapter presents the committee's review and analysis of various factors that bear on how the secondary wastes at BGCAPP and PCAPP are to be managed. This includes the committee's interpretation and analysis of the properties, quantities, and prospective courses of action planned for the secondary waste streams generated at BGCAPP and PCAPP, an assessment of the current state of Assembled Chemical Weapons Alternatives (ACWA) program planning for waste management, and the consideration of certain industrial practices that are used in comparable waste management situations.

SECONDARY WASTE GENERATION FROM BGCAPP OPERATIONS THAT INCLUDE SUPERCRITICAL WATER OXIDATION

Categories of Secondary Wastes and Waste Descriptions

Waste Categories and Quantities

Secondary wastes from the processing of chemical munitions at BGCAPP according to the current design, which uses neutralization followed by supercritical water oxidation (SCWO), can be grouped according to physical and compositional similarity, source, disposal options, or estimated waste stream quantities. Waste categories developed by the Army and its contractors are shown in Table 4-1, along with the source of the waste and the approach proposed for its management. The wastes listed in Table 4-1 are derived from materials generated by the operational processes described in Chapter 2, as well as from closure activities where applicable (BPBGT, 2006a).

Waste estimates for BGCAPP were developed and reported in a 2006 report based on earlier experience at the Johnston Atoll Chemical Agent Destruction System (JACADS) (BPBGT, 2006a). The results of this comparison of waste types and quantities for BGCAPP is only an approximation, because JACADS was an incineration facility, while BGCAPP uses hydrolysis followed by SCWO. Nevertheless, there is enough similarity between the types of munitions that were processed at JACADS and those that will be processed at BGCAPP for the JACADS experience to provide insight into what will be generated at BGCAPP. As previously noted, secondary wastes listed in Table 4-1 reflect waste categories generated during munitions processing as well as from closure operations. Table 4-2 lists total specific types of agent-contaminated wastes and the quantities of each projected to be generated. According to Army estimates, nearly 2.1 million pounds of total agent-contaminated waste will be generated, approximately 400,000 pounds during munitions disposal operations and 1.7 millions pounds during closure operations (BPBGT, 2006a). Tables 4-3 and 4-4 provide estimated quantities of certain items in Table 4-2 according to the degree of agent contamination (1X or 3X-4X).

Waste Descriptions

As discussed in *Operations and Closure Agent-Contaminated Waste Disposal Estimate Summary Report* (known as the *Waste Estimate Summary Report*), secondary wastes generated at BGCAPP could include rags, containers, plastic drum liners, absorbents, solvents, paints, lubricants, tools, power extension cords, personal protective equipment (PPE), and failed electrical and mechanical components (BPBGT, 2006a). Some secondary wastes will be agent-contaminated, such as materials generated during routine entries into potentially agent-contaminated areas, decontamination residues, sludge, and PPE. The last mentioned can take many forms, including cotton clothing, butyl boots and gloves, leather welding aprons, M40 series rubber masks with carbon canister and plastic shield, impregnated chemical protective liner (shirts and trousers), hoods, aprons, rubber hoses from supplied air regulators, and life-support hoses. Decontamination residues will also be produced during operations and closure in forms such as spent decontamination solution,

Copyright © National Academy of Sciences. All rights reserved.

Review of Secondary Waste Disposal Planning for the Blue Grass and Pueblo Chemical Agent Destruction Pilot Plants
http://www.nap.edu/catalog/12210.html

TABLE 4-1 Proposed Secondary Waste Management Approaches at BGCAPP

Waste	Source	Approaches[a]
Activated carbon	Operations and closure activities	Unspecified offsite TSDF
Concrete	Maintenance and closure activities	Metal parts treater Unspecified TSDF (if agent contamination concentration is below release criteria)
Energetics (rocket motor propellant)	Rocket processing operations	Preferred disposal method for noncontaminated rocket motors is offsite recycling Contaminated rocket motors hydrolyzed in energetics batch hydrolyzers
Energetics (projectile bursters)	H projectile processing operations	Hydrolysis in energetics batch hydrolyzers
Projectile munitions bodies	Projectile processing operations	Metal parts treater
Metallic debris	Maintenance and closure activities	Metal parts treater Unspecified TSDF (if agent contamination concentration is below release criteria)
Nonmetallic debris (combustible solids)	Operations, maintenance, and closure activities	Metal parts treater Unspecified TSDF (if agent contamination concentration is below release criteria)
Aluminum precipitation system filter cake	Aluminum precipitation	Unspecified TSDF (not contaminated by agent)
Residue from metal parts treater	Operations and closure activities	Unspecified TSDF (not contaminated by agent)
Rubber/rubber-coated items	Operations, maintenance, and closure activities	Metal parts treater Unspecified TSDF (if agent contamination concentration is below release criteria)
Spent decontamination solution	Operations, maintenance, and closure activities	Onsite hydrolysis SCWO
Spill residue	Spill response activities	Metal parts treater Onsite hydrolysis with SCWO Unspecified TSDF (if agent contamination concentration is below release criteria)
Chemicals w/expired shelf life	Laboratory	Unspecified TSDF (not contaminated by agent)
Tank, sump, and strainer sludge	Operations, maintenance, and closure activities	Metal parts treater Unspecified TSDF (if agent contamination concentration is below release criteria)
Used oils	Maintenance and closure activities	Recycling
Reject brine from reverse osmosis of SCWO effluent	SCWO	Unspecified offsite TSDF

[a]The committee notes that these are proposed approaches to waste management; however, no waste analysis plan has been filed or approved.

SOURCE: Adapted from PMACWA, 2008a.

cotton rags, spill pillows, absorbent granular material, and paper towels.

Preventive and corrective maintenance will produce smaller quantities of wastes, but they may be more varied in form. These include

> SDS and ACS pumps, strainer baskets and housings, gear boxes, hydraulic pumps and motors, hoses, lighting fixtures, heat tracing, CCTV cameras, ACAMS monitoring lines, valves, instruments, and sensors. Additional secondary wastes generated from such activities included: leather welding blankets, nylon straps, tygon tubing, extension cords, fiberglass ladders, plastic sheeting/bags, and plastic drums and containers. Also, the following waste streams are generated: glycol-based hydraulic fluid, gear oil, strainer media and socks, pre-filters, HEPA filters and carbon banks from HVAC filter housing assemblies. (BPBGT, 2006a, p. 7)

Waste Processing Through the Metal Parts Treater

Contaminated materials to be treated in the metal parts treater (MPT) include warhead debris from the energetics

Copyright © National Academy of Sciences. All rights reserved.

Review of Secondary Waste Disposal Planning for the Blue Grass and Pueblo Chemical Agent Destruction Pilot Plants
http://www.nap.edu/catalog/12210.html

TABLE 4-2 BGCAPP Estimated Agent-Contaminated Waste Stream Summary for Operations and Closure

Waste Designation	Total Weight of the Waste (lb)
Inert bulk solid waste	
Metal	1,243,545
Concrete	152,369
Aluminum waste	6,685
Foam core panels	95,498
Special coatings	12,333
Combustible bulk solid	
Nonhalogenated plastics	50,972
Tap gear	4,555
HEPA filters and prefilters	19,997
Adsorbents, cottons, rags, bulk	4,477
Paper, wood, fiberglass, rubber	63,794
Halogenated plastics	308,404
Sludge	1,997
RCRA toxic metal-bearing waste	
Paint chips	121
Leather gloves	224
Other	1,000
Waste oil and hydraulic fluids	1,620
Agent-contaminated activated carbon	103,488
Leaker campaign/overpack waste	15,000
Total	2,071,079

SOURCE: Adapted from BPBGT, 2006a.

TABLE 4-3 BGCAPP Projected 1X Agent-Contaminated Secondary Waste Generation Rates During Operations and Closure[a]

	Projected Rate (lb/yr)	
1X Waste	Operations[b]	Closure[c]
Combustible solids	2,520	21,150
Metal	11,893	307,847
TAP gear/rubber	267	267
Halogenated plastic	4,787	50,346
Nonhalogenated plastic	1,062	12,867
Pre-HEPA filters	502	9,000
ACS/SDS sludge	520	520
Concrete	0	34,283
Foam wall panel	0	21,487
Special coatings	0	2,775
Aluminum	0	1,472
Overpack waste	15,000	0
Total	36,571	462,014

NOTE: TAP, toxic agent protective; HEPA, high-efficiency particulate air; ACS, agent collection system; and SDS, spent decontamination solution.

[a]The source document for the estimates given in this table reported quantities using the Army's X system of classification rather than the currently preferred system based on airborne exposure limits. (AELs). A classification of 1X indicates agent contamination to be >1 VSL.

[b]BGCAPP operations are estimated to have a duration of 2.08 years.

[c]BGCAPP closure is estimated to have a duration of 1.46 years.

SOURCE: Adapted from PMACWA, 2006.

TABLE 4-4 BGCAPP Projected 3X-4X Agent-Contaminated Secondary Waste Generation Rates During Operations and Closure[a]

	Projected Rate (lb/yr)	
3X-4X Waste (unless otherwise noted)	Operations[b]	Closure[c]
Combustible solids	2,623	22,014
Metal	22,087	571,717
TAP gear/rubber	1,066	1,066
Halogenated plastic	14,360	151,039
Nonhalogenated plastic	1,733	20,994
3X pre-HEPA filters	82	5,084
Sludge	64	64
3X concrete	0	79,993
3X foam wall panel	0	50,136
Special coatings	0	6,475
3X aluminum	48	3,435
Total	42,063	912,017

[a]The source document for the estimates given in this table reported quantities using the Army's X system of classification rather than the currently preferred system based on AELs. A classification of 3X or 4X indicates agent contamination to be <1 VSL.

[b]BGCAPP operations are estimated to have a duration of 2.08 years.

[c]BGCAPP closure is estimated to have a duration of 1.46 years.

SOURCE: Adapted from PMACWA, 2006.

batch hydrolyzer, contaminated pallets, shipping and firing tubes, secondary wastes generated during operations, and certain closure wastes. Decontamination by means of high temperatures in the MPT will be verified by ensuring that the waste met time and temperature requirements for attaining "unrestricted release" status.

Other Waste Streams

Based on the JACADS experience and BGCAPP estimates, the committee has identified the following waste streams in addition to those already identified in Table 4-1 and Table 4-2:

- *SCWO reactor liners.* Because SCWO is so highly corrosive, it may be necessary to replace the SCWO liner as often as once a week, but liner lifetime will not be known until the plant is in operation. Given the harsh nature of the SCWO environment, it is certain that some degree of liner replacement will be required. The reactor liners are fabricated of titanium, and at present it is not known how they will be disposed of.
- *Multimedia filters and canister filter media from the SCWO*. The SCWO effluent is passed through multimedia filters and canister filters before entering the reverse osmosis (RO) unit. The filter media will constitute secondary waste, but at present there

Copyright © National Academy of Sciences. All rights reserved.

Review of Secondary Waste Disposal Planning for the Blue Grass and Pueblo Chemical Agent Destruction Pilot Plants
http://www.nap.edu/catalog/12210.html

are no plans for characterizing or disposing of this material.

- *Reverse osmosis brine*. The RO rejectate will be a brine that is sent for offsite treatment.
- *Scrubber water from the energetics offgas treatment (OTE) system*. Scrubber water from the OTE is to be treated through "subsequent processing." Neither the waste nor the subsequent processing has yet been characterized.
- *Particulate filter media from the OTE*. Filter media containing particulate matter are generated in the OTE. They must be characterized and disposed of as a secondary waste.
- *Particulate filter media from the venturi scrubber.* Filter media containing particulate matter are generated in the venturi scrubber. They must be characterized and disposed of as a secondary waste.

Finding 4-1. The documentation for secondary waste streams made available to the committee failed to identify reverse osmosis rejectate brine, supercritical water oxidation (SCWO) filtrate solid waste, SCWO titanium tank liners, venturi scrubber particulate filters, or filters from the energetics offgas treatment system (OTE) as potential secondary wastes from BGCAPP.

Recommendation 4-1. To avoid the possibility of unanticipated disposal problems, the PMACWA and the BGCAPP contractor should characterize and consider waste management options for reverse osmosis rejectate brine, supercritical water oxidation (SCWO) filtrate solid waste, SCWO titanium tank liners, venturi scrubber particulate filters, and energetics offgas treatment system filters before submitting the waste analysis plan required by RCRA. The PMACWA should also look carefully for any as-yet-unidentified secondary waste streams from BGCAPP or PCAPP.

SECONDARY WASTE GENERATION FROM PCAPP OPERATIONS THAT INCLUDE BIOTREATMENT

The processing of chemical munitions at PCAPP, which uses neutralization followed by biotreatment, will generate secondary waste streams during pilot testing, munitions processing operations, and closure. These wastes may arise from general maintenance activities, equipment cleaning and repair, measures to ensure worker safety, and sampling activities. Anticipated secondary waste streams, their source, and their anticipated management are listed in Table 4-5. The approaches for disposing of the different secondary waste streams will be decided once the waste analysis plan (WAP) has received final approval. Table 4-6 lists total estimated quantities of specific types of PCAPP wastes. Table 4-7 and Table 4-8 show estimated amounts of the various types of waste that will be generated during operations and closure, respectively, in terms of the degree of contamination by mustard agent (<1 VSL or >1 VSL).

Dunnage, Energetics, and Miscellaneous Metal Parts

Historical information, visual observation, and monitoring during transport to the energetics reconfiguration building and during munitions disassembly are used to determine if dunnage or energetics could be agent-contaminated. Noncontaminated dunnage will be shipped offsite to a commercial treatment, storage, and disposal facility (TSDF) as a hazardous waste due to the presence of pentachlorophenol. Noncontaminated propellant bags and wafers, ignition cartridges, and miscellaneous metal parts removed in the energetics reconfiguration building will be shipped offsite to a commercial TSDF.

Agent-contaminated dunnage may be treated in the supplemental decontamination unit (SDU) or the autoclave. The dunnage would include metal straps and parts removed during reconfiguration, wood pallets and boxes, fiber tubes and packing material, asbestos packing rings, steel grommets, and other like materials.

Agent-contaminated energetics (e.g., wafers, bursters, boosters, fuzes, and well cups) will be treated in the explosive destruction technology (EDT) unit; wastes from EDT treatment are not included in this report.[1] Uncontaminated energetics will be shipped offsite as a Class 1 (explosive) hazardous material.

Solids from the Munitions Treatment Unit

Solids from the munitions treatment unit (MTU) include munitions bodies and burster wells as well as residue (e.g., paint chips) generated during periodic cleaning of the MTU. Decontaminated munitions bodies will be sent offsite and can be recycled for scrap metal under Colorado regulations (PMACWA, 2006).[2] The characterization of residue includes an analysis for toxicity characteristic leaching procedure (TCLP) metals. It is subsequently drummed and shipped offsite to an appropriate TSDF.

Filtering Media

The offgas treatment systems and agent filter area (AFA) have filtering systems that will produce waste. These include particulate filter waste, iron sponge absorber waste, prefilters, and high-efficiency particulate air (HEPA) and activated carbon filters. Activated carbon is used as filter medium in

[1]Again, as first noted in Chapter 2, a forthcoming NRC report will examine the applicability of the various types of EDTs for use at PCAPP and, possibly, BGCAPP. It will include an examination of wastes from EDT treatment.

[2]See Section C-2c(1), page C-20, of the cited reference.

Copyright © National Academy of Sciences. All rights reserved.

Review of Secondary Waste Disposal Planning for the Blue Grass and Pueblo Chemical Agent Destruction Pilot Plants
http://www.nap.edu/catalog/12210.html

TABLE 4-5 Proposed Secondary Waste Management Approaches for PCAPP

Waste	Source	Management Method
Carbon from filter banks	Operations and closure activities	Unspecified offsite TSDF
Concrete	Maintenance and closure activities	SDU or autoclave (agent-contaminated) Unspecified TSDF (if agent contamination concentration is below release criteria)
Energetics (propellants and explosives)	Operations activities	Onsite treatment (agent-contaminated) Unspecified recycler or TSDF (if agent contamination concentration is below release criteria)
Decontaminated munitions bodies, processed through the MTU	Operations activities	Unspecified recycler
Metallic debris	Operations, maintenance, and closure activities	SDU or autoclave (agent-contaminated) Unspecified recycler or TSDF (if agent contamination concentration is below release criteria)
Nonmetallic debris (combustible solids)	Maintenance and closure activities	SDU or autoclave (agent-contaminated) Unspecified TSDF (if agent contamination concentration is below release criteria)
Brine reduction system solids	Operations and closure activities	Unspecified TSDF
MTU residue	Operations and closure activities	Unspecified TSDF
Nonmunitions PCD waste	Maintenance activities	SDU or autoclave (agent-contaminated) Unspecified TSDF (if agent contamination concentration is below release criteria)
Rubber/rubber-coated items	Maintenance and closure activities	SDU or autoclave (agent-contaminated) Unspecified TSDF (if agent contamination concentration is below release criteria)
Spent decontamination solution	Operations, maintenance, and closure activities	Onsite agent hydrolyzers
Spill residue	Spill response activities	SDU (agent-contaminated) Unspecified TSDF (if agent contamination concentration is below release criteria)
Chemicals w/expired shelf life	Laboratory activities	Unspecified offsite disposal Onsite laboratory disposal
Tank, sump, and strainer sludge	Operations, maintenance, and closure activities	SDU (agent-contaminated) Unspecified TSDF (if agent contamination concentration is below release criteria)
Used oils	Maintenance and closure activities	Recycling

SOURCE: Adapted from PMACWA, 2006, 2008b.

the AFA, some tank vents, and in canisters associated with personal protective masks. AFA banks 2 through 6 and some mask canisters are not expected to be agent-contaminated (PMACWA, 2006).[3] Agent monitors are used between the respective banks of carbon to indicate if any agent has broken through the preceding bank. Noncontaminated carbon is to be shipped offsite for treatment and/or disposal, with characterization based on generator knowledge. Agent-contaminated carbon is treated in the autoclave prior to agent analysis, followed by offsite treatment and/or disposal. Design plans for PCAPP do not anticipate changing out activated carbon filters prior to closure.

[3]See Section C-2b(4) of the cited reference.

Secondary Wastes from Water Recovery System and Brine Reduction System

Sludges and other residues are produced by the biotreater and the water recovery system (WRS). Filter cake

Copyright © National Academy of Sciences. All rights reserved.

Review of Secondary Waste Disposal Planning for the Blue Grass and Pueblo Chemical Agent Destruction Pilot Plants
http://www.nap.edu/catalog/12210.html

TABLE 4-6 Total Estimated Secondary Wastes from Normal Operations and Closure for PCAPP (pounds)

Waste Description	Normal Operations	Closure Operations
Wood dunnage	3,550,390	0
Fiber tube	731,369	0
TAP gear	28,638	11,088
Steel/aluminum	38,182,554	129
Brine reduction generated	55,114,416	0
Water recovery thickener residue	3,900,792	0
Energetics	138,225	0
Brass and copper wire	211,600	0
Charcoal from PPE mask containers	2,583	1,000
Bulk solid waste	240,404	656,930
Halogenated waste	27,294	93,983
DPE suits	202,524	78,416
Waste oils	7,687	2,976
Spent hydraulic fluid	4,928	1,908
Leather	2,974	1,151
Absorbents	23,886	16,447
Polystyrene and polyethylene (poly drums and 5-mil poly bags)	14,024	3,685
HEPA/prefilters	0	38,000
HVAC	0	207,900
Filtration charcoal	0	170,000
Filter plenums	0	100,000
Filter ductwork		
Concrete scabbled	0	27,000
Combustible solid wastes		
Electrical parts/instrumentation (>5% plastics)	572	48,862
Nonhalogenated plastics	23,878	19,595
Sludge (tanks, building sumps, strainers)	1,524	590
Waste paint sludges	4,099	1,588
Batteries/mercury-containing lighting	48,980	1,833
Bioreactor offgas treatment system		
Iron sponge	0	431,520
Prefilters	0	644
HEPA prefilters	0	1,620
Carbon filters	0	60,000
Total	102,463,341	2,001,565

SOURCE: Answers to committee's Question Set 5 for PCAPP, March 11, 2008.

from the WRS dewatering filter press is tested for TCLP metals, TCLP organics, and free liquids. This waste stream is drummed and shipped offsite for treatment and/or disposal in an appropriate TSDF.

The brine reduction system treats the clarified effluent from the WRS to produce a solid cake that can be disposed of offsite. The filter cake is tested for TCLP metals and organics and for free liquids (PMACWA, 2006).[4] This waste stream is drummed and shipped offsite for treatment and/or disposal in an appropriate TSDF.

TABLE 4-7 PCAPP Projected Amounts of Mustard-Agent-Contaminated Secondary Waste from Normal Operations According to Level of Agent Contamination

	Amount (lb)	
Stream Description	<1 VSL	>1 VSL
Wood	0	56,906
Fiber tubes, additional packing material, metal strapping, miscellaneous metal	0	0
TAP gear	9,639	6,709
Steel	0	0
Lead alloy	0	0
Aluminum	18	53
Brine reduction	0	0
Water recovery thickener residue	0	0
Energetics	0	0
Brass/copper wire	0	0
Charcoal from PPE mask containers	0	2,583
Inert bulk solid waste	15,421	35,790
Halogenated waste	3,153	2,661
DPE suits	121,514	81,010
Waste oils/spent hydraulic fluid	2,416	400
Leather	437	197
Absorbents	1,534	3,554
Paper/fiberglass/rubber	0	0
Polystyrene and polyethylene	669	2,318
Combustible solid waste	2,827	2,382
Waste paint sludge	915	455
Dry cell batteries	1,828	203
Lead acid batteries	1,219	135
Mercury-containing lighting	259	29
Total	161,849	195,385

NOTE: TAP, toxic agent protective; PPE, personal protective equipment.

SOURCE: Answers to committee's Question Set 5 for PCAPP, March 11, 2008.

Laboratory Wastes

Laboratory wastes are collected in each hood. All agent-contaminated wastes are placed in a bleach solution daily. The liquids are decanted, analyzed to confirm that agent has been destroyed, and shipped offsite for disposal (PMACWA, 2006).[5] The solids are bagged, screened for agent by head-space monitoring, and drummed for offsite disposal. Process knowledge is utilized to segregate agent-contaminated waste streams from noncontaminated laboratory waste streams; the latter do not require sampling or monitoring.

Finding 4-2. At PCAPP, brine from the water recycling and sludge from the biotreatment are the largest waste streams. They are not considered to be contaminated with chemical agent but may be a hazardous waste for other reasons.

[4]See Section C-2b(3), page C-14, of the cited reference.

[5]Specifically, see Section C-2b(9), page C-16, of the cited reference.

Copyright © National Academy of Sciences. All rights reserved.

Review of Secondary Waste Disposal Planning for the Blue Grass and Pueblo Chemical Agent Destruction Pilot Plants
http://www.nap.edu/catalog/12210.html

TABLE 4-8 PCAPP Projected Amounts of Mustard-Agent-Contaminated Secondary Waste from Closure According to Level of Agent Contamination

	Amount (lb)	
Stream Description	<1 VSL	>1 VSL
Wood	0	0
TAP gear	3,704	412
Steel	0	0
Aluminum	21	7
Brine reduction	0	0
Water recovery thickener residue	0	0
Propellant	0	0
Brass/copper wire	0	0
Charcoal	0	1000
Inert bulk solid waste	262,351	259,498
Halogenated waste	27,946	25,910
DPE suits closure (APB)	47,050	31,366
Waste oils/spent hydraulic fluid	927	164
Leather	147	98
Absorbents	350	3153
Paper/fiberglass/rubber	0	0
Polystyrene and polyethylene (poly drums and 5-mil poly bags)	0	785
HEPA/prefilters	9,500	28,500
HVAC		
Filtration charcoal	30,690	3,410
Filter plenums	15,300	1,700
Filter ductwork	9,000	1,000
Concrete	38,775	12,925
Combustible solid waste	26,359	26,503
Waste paint sludges/sludges	0	531
Dry cell batteries	707	79
Lead acid batteries	472	52
Mercury-containing lighting	100	11
Total	473,399	397,102

SOURCE: Answers to committee's Question Set 5 for PCAPP, March 11, 2008.

PLANNING CONSIDERATIONS FOR SECONDARY WASTE MANAGEMENT

Determination of Agent-Contaminated and Noncontaminated Waste

BGCAPP

Some of the secondary wastes generated at BGCAPP could be characterized as noncontaminated, or "clean," based on generator process knowledge, risk assessment, or other evidence that the waste has never been in an environment where it could have become contaminated by agent. In such cases, these secondary wastes could be disposed of offsite as solid wastes unless they demonstrate a hazardous characteristic or contain another listed waste.

A waste that cannot be certified as noncontaminated based on generator process knowledge can still be certified clean if headspace monitoring shows the agent level to be <1 VSL. For materials decontaminated at low temperature, headspace monitoring will be used for characterization. The Army has an array of monitors at its disposal that have been effective in past applications. It is likely that either near-real-time monitoring or Depot Area Air Monitoring System monitors would be used for headspace monitoring.

Secondary wastes that have been in the vicinity of agent will need to be monitored to determine whether they are agent-contaminated. Examples of such process-related wastes are wood pallets, PPE, rocket motors, plastics, toxic agent protective gear, HEPA filters, absorbents, paper, and rubber. Monitoring for agent contamination is to be conducted in accordance with the Department of the Army's *Implementation Guidance Policy for Revised Airborne Exposure Limits* (U.S. Army, 2004) and approved site procedures. For most potentially agent-contaminated solid wastes, the headspace of the packaged material will be monitored to determine their status as clean or agent-contaminated (NRC, 2007). Characterizations by means of extractive techniques may be required for certain types of secondary waste such as porous and/or adsorptive wastes for which headspace monitoring alone is not appropriate. Wastes that cannot be decontaminated to the appropriate applicable AEL(s) must be processed in the MPT before being shipped offsite for disposal in a permitted TSDF (BPBGT, 2006b).[6]

For liquid streams, the initial hydrolysate from chemical agent neutralization will be sampled and analyzed for agent. The analytical procedures for testing GB and VX hydrolysates have been outlined in the Technical Risk Reduction Program (TRRP) activity 2a, Phase II, and activity 11, respectively, which are discussed later in this chapter (Malloy et al., 2007; Dejarme and Lecakes, 2008).[7] Once destruction efficiency (DE) has been demonstrated, subsequent batches can be transferred for further processing onsite or to an appropriate TSDF based on testing to be performed in accordance with the WAP.[8] Validated process controls and statistical testing may be used in lieu of analysis. However, prior to release from the plant areas under engineering controls for agent, hydrolysates and other liquid effluents will be analyzed to meet the target action limit, which is the agent concentration for which 95 percent of the measurements are below the release criteria.

[6]See Attachment 4, Section 4.2, of the cited document.

[7]The TRRP involves a series of laboratory and prototype equipment tests that have been instituted as the ACWA program has evolved. The TRRP activities provide input into the design effort by filling data gaps and validating the design basis. The intent is to help ensure the facilities' equipment and operations perform correctly once operations begin, which in turn will help to ensure safety, accelerate the process, and reduce cost. Among the studies conducted have been design, fabrication, and testing of key first-of-a-kind equipment; SCWO performance testing; and studies using nerve and mustard agent to confirm neutralization reactor conditions.

[8]The WAP for BGCAPP had not yet been developed or submitted when this report was being prepared.

Copyright © National Academy of Sciences. All rights reserved.

Review of Secondary Waste Disposal Planning for the Blue Grass and Pueblo Chemical Agent Destruction Pilot Plants
http://www.nap.edu/catalog/12210.html

PCAPP

Under the WAP filed with the Colorado Department of Public Health and Environment (CDPHE), PCAPP will use generator process knowledge as the primary means of characterization, with direct sampling and analysis used to verify process knowledge. Agent monitoring is conducted in accordance with the Army's AEL guidance dated June 18, 2004 (U.S. Army, 2004). There are three approaches for classifying and disposing of a secondary waste relative to its contamination by agent:

1. The waste is containerized and its headspace is monitored to determine the appropriate classification; or
2. The waste is assumed to be agent-contaminated and is decontaminated in accordance with the RCRA permit or regulations; adequate decontamination (<1.0 VSL) is verified via monitoring at the SDU or autoclave, whereupon it is reclassified as "clean" and shipped offsite; or
3. The waste is assumed to be agent-contaminated and is shipped offsite to a facility permitted to receive such wastes.

Following approach 1, if <1.0 VSL, the waste is classified as clean and shipped offsite, and if >1.0 VSL, approach 2 or approach 3 is followed (PMACWA, 2006).[9] Adequate decontamination, defined as <1.0 VSL, may need to be accomplished in the SDU or the autoclave and verified via monitoring at the SDU or the autoclave. As previously indicated, Table 4-6 shows the total estimated secondary wastes, while Tables 4-7 and 4-8 show projected generated quantities of contaminated secondary wastes according to their level of contamination (before any onsite treatment) for the operational and closure stages of PCAPP, respectively.

Finding 4-3. In the committee's opinion, the waste management planning for PCAPP was overly optimistic in projecting there would be no agent-contaminated energetics, wood dunnage, etc. (as shown in Tables 4-7 and 4-8). The committee believes, based on the past experience of its members, that some of these wastes will in fact be contaminated to some extent. Nevertheless, the optimism in projecting no agent contamination of these wastes is accommodated by having a capability for decontamination, if necessary, in the supplemental decontamination unit or autoclave.

Hydrolysate Chemistry, Related Analytical Approaches

An important aspect of the secondary treatment of the agent hydrolysate is verification of 99.9999 percent agent destruction. The sodium hydroxide matrix has presented challenges for conventional chromatographic analysis schemes of VX and GB hydrolysates. This section describes the chemistry occurring during caustic hydrolysis of GB, VX, and mustard agent and notes the research that has been conducted to develop viable strategies for agent detection in the hydrolysate at required levels.

GB Chemistry and Detection

Base hydrolysis of GB results in formation of isopropyl methylphosphonic acid and sodium fluoride, which are the principal components of the hydrolysate. Diisopropylcarbodiimide (DICDI) was present in the original agent, where it was used as a stabilizer. However, DICDI undergoes hydrolysis in the original agent, forming 1,3-diisopropyl urea (DIPU), which is detected in both the agent feed and in the hydrolysate. Hydrolysis mostly produces an aqueous phase, but a small organic phase is also produced (Malloy et al., 2007).

Two salient issues in the hydrolysis of GB motivated a TRRP activity (Malloy et al., 2007). First, quantities of GB that exceeded the minimum detection limit, 20 μg/L, had been found in the brines that are an end product of the process. Second, the neutralization process and the clearing (screening) of the resulting hydrolysates was too time-consuming for the large-scale processing effort being proposed for BGCAPP.

A primary objective of TRRP activity 2a, Phase II, was to find a workable new method for GB analysis (Malloy et al., 2007). The method previously used suffered from inaccuracy derived from the GB re-formation that occurred in the heated injector of the gas chromatograph used for the analysis. This proved problematic for demonstrating that the GB concentrations in the hydrolysate were <75 ppb, which was the action level for clearing the hydrolysate.

An improved extraction-gas chromatograph/mass spectrometer method was developed using a cool-on-column injection that eliminated GB re-formation in the injector during the analysis. This enabled a much more rigorous evaluation of hydrolysis performance starting with GB batches of varying compositions. The new method (EXTN/COC/GC/MS, BGCAPP 104b) (Malloy et al., 2007) was demonstrated to be effective for GB hydrolysates of varying compositions, specifically GB stabilized with either tributylamine or DICDI, and also for GB crystals (DIPU). The method can also be used for measuring GB in other matrices, such as the munitions washout hydrolysate, blended hydrolysate, SCWO effluent, RO rejectate, and energetics hydrolysate (Malloy et al., 2007). See Appendix D for additional details of TRRP activity 2a, Phase II.

Finding 4-4. The research on analysis methodologies for determining the level of residual agent in GB hydrolysate from Technical Risk Reduction Program activity 2a, Phase

[9]See Attachment C, Section C-2b(1), of the cited documents.

Copyright © National Academy of Sciences. All rights reserved.

Review of Secondary Waste Disposal Planning for the Blue Grass and Pueblo Chemical Agent Destruction Pilot Plants
http://www.nap.edu/catalog/12210.html

II, provides assurance that the level of residual GB in the hydrolysate can be measured accurately.

VX Chemistry and Detection

Caustic hydrolysis of VX generates a hydrolysate that normally consists of two liquid phases: (1) an aqueous phase containing caustic and dissolved salts and (2) an organic phase that contains organics having limited water solubility (Dejarme and Lecakes, 2008). The hydrolysate contains ethyl methylphosphonic acid and diisopropylaminoethanethiol (also known as DESH, thiolamine, or VX thiol) as the main hydrolysis products. In addition, EtOH and a compound known as EA2192 are formed, which is significant because EA2192 is nearly as toxic as VX and is fairly stable. The organic phase is principally bis(diisopropylaminoethyl) disulfide, which is formed from oxidation of the thiolamine. Other compounds that might partition into the organic phase would include residual thiolamine, stabilizers such as DICDI, dicyclohexylcarbodiimide (DCC), and intact VX. Reaction of ethyl methylphosphonic acid with dicyclohexylcarbodiimide has been shown to result in formation of diethyl dimethyl pyrophosphonate (also known as VX pyro), which has substantial toxicity and will react further with the diisopropylaminoethanethiol to re-form VX (Brickhouse et al., 1998).

TRRP activity 11 was conducted to determine whether the hydrolysate contained residual VX (Dejarme and Lecakes, 2008). For the BGCAPP design incorporating SCWO, this was important because clearance levels for moving hydrolysate to the SCWO reactor system were 160 µg/L for VX and 1 g/L for EA2192. Bench-scale reactor tests were conducted on five different batches of VX from munitions that contained either DICDI or dicyclohexylcarbodiimide as stabilizers. Experiments were conducted by mimicking the recipe for BGCAPP, which involved loading the reactor with 16.6 percent VX, 17.4 percent caustic (which was 50 percent sodium hydroxide), and 66 percent water and heating the mixture to 90°C. The reactor studies produced VX hydrolysate that could be analyzed for residual VX using a modified cool-on-column gas chromatograph method (see below). Residual EA-2192 was analyzed using high-performance liquid chromatography employing either diode array or ultraviolet detection (detail is provided in Appendix D). When the method was applied to hydrolysate generated in a reactor using the neutralization recipe to be used at BGCAPP, VX was not detected in any of nine batches, with limits of quantification ranging from 4 to 14 µg/L (ppb). EA2192 was detected in only one batch (at 51 ppm), with method detection limits ranging from 11 to 159 ppm. Reanalysis of this sample 24 hours later showed that EA2192 was not detected. Another significant result was that VX was not detected in the headspace of the reactor.

Instrumental analyses for VX and EA2192 have been problematic in past operations, and it was reasoned that the validity of the results of the VX neutralization reactor tests for BGCAPP could be questioned on the basis of inaccurate, imprecise, or insensitive analytical procedures. For this reason, TRRP activity 11 (Dejarme and Lecakes, 2008) also examined the analytical methods for VX and EA2192 that are used for clearing the hydrolysate. It was believed that the method that had been used at Newport Chemical Agent Disposal Facility could be used at BGCAPP. However, operational challenges, including matrix interferences, were identified. Consequently, TRRP activity 11 included extensive research that produced a modified extraction-gas chromatography/mass spectrometry method that employed cool-on-column injection. This eliminated re-formation in the injector region and enabled refinement and optimization of both the extraction and chromatographic details. Additional details on the results of this research are presented in Appendix D. These studies indicate that the instrumental method used for clearing the VX hydrolysate for further SCWO treatment is adequate.

Finding 4-5. The research on analysis methodologies for determining the levels of residual agent in VX hydrolysate from Technical Risk Reduction Program activity 11 provides assurance that the level of residual VX in the hydrolysate can be measured accurately.

Mustard Agent (H, HD, HT) Chemistry and Detection

Caustic hydrolysis of mustard results in formation of 2,2'-thio-bis-ethanol (thiodiglycol); 2,2'-[1,2-ethanediylbis(thio)]-ethanol; 2,2'-[oxy bis(2,1-ethanediylthio)] bis-ethanol; 1,4-oxathiane; 1,4-dithiane; 1,2-dichloroethane; and vinyl chloride (Yang et al., 1988).[10] The TRRP activity that focused on characterization of mustard agent H hydrolysate did not indicate problems with either the hydrolysis chemistry or the analysis (Usinowicz et al., 2005). It is well known that mustard agent H undergoes degradation reactions during storage (Creasy et al., 1999), and some of these products can form higher molecular weight mustard heels (Yang et al., 1997). However, because these were readily soluble under washout conditions, they do not complicate either hydrolysis or analysis.

Finding 4-6. Work on the characterization of mustard agent hydrolysis showed that the analysis for mustard agent is accurate and did not give any evidence of any outstanding risk to the public, the workforce, or the environment stemming from the hydrolysis chemistry or the analysis of the hydrolysate.

[10]Yu-Chu Yang, Assembled Chemical Weapons Alternatives Program, "Chemical compositions of liquid HT, solid HT, liquid H and solid H," presentation to the Mustard Working Group Meeting, September 23, 2003.

Copyright © National Academy of Sciences. All rights reserved.

Review of Secondary Waste Disposal Planning for the Blue Grass and Pueblo Chemical Agent Destruction Pilot Plants
http://www.nap.edu/catalog/12210.html

Offsite Treatment of Secondary Wastes

In addition to the offsite shipment of noncontaminated secondary wastes, some potentially agent-contaminated wastes may be shipped offsite provided (1) the waste meets any release criteria or limit as established in the RCRA permit, (2) the offsite facility is permitted to receive such wastes, and (3) transportation risks are assessed and found to be acceptable.[11]

For example, the Army has proposed shipping spent activated carbon offsite for treatment. In addition, according to the briefing given to the committee on January 23, 2008, consideration may be given to offsite shipment of certain liquid streams.[12] In such cases, release criteria will be established in accordance with federal, state, and Army policies, and only secondary wastes that meet these release criteria will be transported offsite for treatment or disposal. Release criteria may differ from DE levels (e.g., "nondetect" at PCAPP and target release levels at BGCAPP) for removal of liquids from areas of the facility under engineering controls for limiting exposure to agent. Depending on the requirements established in the facility's WAP, such wastes must be characterized using an appropriate methodology before being shipped offsite. Such methodologies may include monitoring or extractive analyses, as well as characterization by generator knowledge—for example, operating records or process knowledge, vapor screening, and actual characterization). The receiving facility can also ask for additional tests beyond those done at the destruction facility.

Finding 4-7. The applications for modifications of the research, development, and demonstration permits for both BGCAPP and PCAPP proposed that a number of specific secondary wastes be shipped offsite for treatment or ultimate disposal.

Recommendation 4-2. The Program Manager for Assembled Chemical Weapons Alternatives should continue to pursue the acceptance of the planned offsite shipment and disposal of secondary waste through permit modifications and stakeholder involvement.

In the BGCAPP and PCAPP facilities, the processes for munitions disassembly and agent destruction by hydrolysis (neutralization) are conducted in the munitions demilitarization building, which is under engineering controls for limiting exposure to agent. Processes for secondary treatment such as SCWO or biotreatment are outside the area under these engineering controls. Effluents from agent chemical neutralization would have to be sampled and analyzed. Current planning calls for validated process controls and statistical testing to be used in lieu of analyzing all batches of a hydrolysate once 99.9999 percent destruction efficiency has been demonstrated on agent hydrolysate.[13] Liquid effluents would have to be analyzed to determine if they meet the established release criteria before release from the area of the munitions demilitarization building under engineering controls for agent.

Finding 4-8. Generator process knowledge (validated process controls and statistical testing) is expected to be used where possible to determine destruction of agent in hydrolysate on a continuing basis at BGCAPP and PCAPP.

Recommendation 4-3. Each batch of agent hydrolysate produced at BGCAPP and PCAPP should be sampled to ensure that the required level of agent destruction has been met to satisfy potential stakeholder concerns.

To determine if a transportation risk assessment is necessary for offsite shipments of secondary wastes, the Army has proposed using hazardous solid waste assessment methodologies to ensure that concentrations of residual agent in any wastes shipped offsite are within the limits set by a standard approach (bounding)[14] transportation risk assessment for wastes with >1 VSL; this approach is currently under development by the Chemical Materials Agency (CMA) (NRC, 2007). Examples of such assessment methodologies include, but are not limited to, headspace monitoring and extractive analysis (e.g., approved agent-related methods, EPA SW-846 methods and procedures (EPA, 2007), operational records, and characterization via generator knowledge).

Closure Planning

BGCAPP

Wastes generated at BGCAPP during closure will not be dissimilar to those generated at JACADS.[15] The anticipated wastes have been estimated based on knowledge from JACADS and adjusted for the BGCAPP footprint and design. The amount of contaminated closure wastes that will require decontamination for agent should be less than that experienced at JACADS because the plant is smaller and more of the processing equipment is outside the exclusion zone.

The anticipated closure waste quantities are summarized in Tables 4-3 and 4-4. The largest amounts of waste will be metals, halogenated plastics, and concrete. Halogenated

[11]Transportation risk assessments are discussed in a later section of this chapter.

[12]Kevin Regan, environmental manager, BGCAPP, "Process alternates for wastes," presentation to the committee, January 23, 2008.

[13]Kevin Regan, environmental manager, BGCAPP, "Current waste analysis and certification," presentation to the committee, January 23, 2008.

[14]Bounding conditions are the maximum agent concentrations and maximum number of shipments specific to the site.

[15]See NRC, 2002b, for information on the closure wastes at JACADS.

Copyright © National Academy of Sciences. All rights reserved.

Review of Secondary Waste Disposal Planning for the Blue Grass and Pueblo Chemical Agent Destruction Pilot Plants
http://www.nap.edu/catalog/12210.html

plastic includes demilitarization protection ensemble suits and related entry equipment. In addition, there will be contaminated and noncontaminated activated carbon from the offgas treatment systems.

Closure wastes contaminated with agent above clearance levels based on the Army's AEL guidance and suited for treatment in the MPT are expected to be decontaminated in the MPT to appropriate release criteria that have not yet been established or approved (U.S. Army, 2004). This will require careful planning to ensure that the MPT is operational during deconstruction.

It is expected that noncontaminated and decontaminated secondary waste will also be cleared for offsite shipment using the Army's current AEL guidance or generator knowledge. Where possible, headspace analysis will be used to clear material. Several of the closure wastes present unique difficulties because they will come from agent processing areas that may have been exposed to elevated agent-vapor readings but are unlikely to be agent-contaminated. Examples of these wastes are electronic circuit boards, closed circuit television cameras, batteries, and mercury switches. The *Waste Estimate Summary Report* proposes that the wastes be chemically decontaminated and then shipped offsite for additional treatment and/or disposal rather than processed through the MPT (BPBGT, 2006a).

The option of shipping wastes with low levels of agent contamination that are >1 VSL to an appropriate TSDF would still need to be negotiated with the regulatory authorities and would require active involvement of the public stakeholders in order to allow for a smooth operation.

A significant closure waste stream is scabbled concrete. This material is of concern because agent that contacts it may be absorbed by the coatings on the concrete or into the pores below. Therefore "concrete may have to be removed or cracks may have to be chased locally" (BPBGT, 2006a, p. 12). The requirement at BGCAPP is that the potentially contaminated concrete will be "scarified to a nominal depth of 0.25-inch. The 0.25-inch scabbling depth should be sufficient to remove contaminants that may have permeated through the layers of protective coating" (BPBGT, 2006a, p. 11). This requirement is derived from experience in the nuclear industry and from the JACADS closure requirements. The experience in the nuclear industry is related to the migration of radionuclides (metal cations) into concrete, but chemical warfare agents (organic compounds) may not behave the same way. The second justification for the depth of this is derived from the JACADS closure requirement, but the *Waste Estimate Summary Report* does not seem to contain any further technical backing for the decision. Since the scabbled concrete could generate a significant volume of secondary closure waste, any action that would minimize the quantity of material categorized as agent-contaminated would result in substantial savings for the Army.

Precautions have been taken in the areas of the plant likely to become contaminated with agent to minimize the contamination of concrete. An epoxy coating is used to minimize contamination of the concrete as a result of spilled agent, hydrolysate, and decontamination solution. The coating would have to remain intact over the much shorter operating period than the operating period for JACADS, which was 10 years. This could allow for shallower scabbling of the concrete than the 0.25-inch depth used at JACADS. It should also mean that there is less contamination in cracks and joints.

PCAPP

The anticipated closure wastes are summarized in Table 4-6. These are estimates based on the wastes generated during closure of the Aberdeen Chemical Agent Disposal Facility, which used the same neutralization process to destroy HD mustard agent stored in bulk. Estimates were made of the additional waste from the closure of the bioreactors, which were not a part of the process at Aberdeen, where the hydrolysate was sent to a commercial TSDF.

The largest volumes of closure wastes will be steel and other metals, activated carbon, halogenated plastic, and concrete. These wastes will for the most part have agent contamination of <1 VSL because they did not come from the areas where neat agent was being processed. It should be possible to ship them to an appropriate TSDF as hazardous waste for further treatment or disposal.

As at BGCAPP, the amount of concrete waste that will require treatment because of possible agent contamination could be much less than in past operations. The PCAPP design likewise calls for epoxy coating for all surfaces in the process areas where there is potential for exposure to agent. This would minimize the possibility of agent contamination of the concrete, in turn minimizing the depth of scabbling required to less than 0.25 inch. Based on JACADS experience, even the scabbled concrete was amenable to disposal without further treatment.

Finding 4-9. The current plans for scabbling to a depth of 0.25 inch during the closure of BGCAPP and PCAPP appear to be conservative and to have no explicit scientific justification. This could result in more scabbled concrete than necessary being classified as agent-contaminated.

Recommendation 4-4. The Program Manager for Assembled Chemical Weapons Alternatives (PMACWA) should examine the justification for scabbling the concrete to a 0.25-inch depth in order to understand how deep the concrete must be scabbled during the closure of BGCAPP and PCAPP. Alternatively, the PMACWA should investigate means for measuring residual agent on the concrete surfaces.

Copyright © National Academy of Sciences. All rights reserved.

Review of Secondary Waste Disposal Planning for the Blue Grass and Pueblo Chemical Agent Destruction Pilot Plants
http://www.nap.edu/catalog/12210.html

COMPARISON WITH INDUSTRIAL PRACTICES

The material in this section is supplemented by material in a previous National Research Council report (NRC, 2007), which addressed four chemical agent disposal facility sites in the continental United States that use incineration technology and one site that uses neutralization technology, all of them operated under the authority of the CMA. The regulatory requirements and the types of secondary wastes that will be generated at the two ACWA facilities being studied here are very similar to those at the CMA facilities.

Waste Management Treatment and Disposal

As described in Chapter 3, ACWA facilities and industrial hazardous waste facilities are both governed by RCRA regulations. In both cases, waste characterization, including acceptable analytical methodologies, is guided by the facility's RCRA permit and the associated WAP. Based on the aforementioned report (NRC, 2007) and on discussions between members of the present committee with personnel from KDEP, BGCAPP,[16,17] CDPHE, and PCAPP,[18,19] the committee has determined that there is little difference between the application of regulatory conditions and requirements at industrial hazardous facilities and chemical agent disposal facilities. Moreover, for BGCAPP and PCAPP, as for the other chemical agent disposal facility sites, what few small differences do arise, arise for the same reason as given in the 2007 report, namely:

> the characterization, management, and disposal of chemical agents and the related secondary wastes at chemical agent disposal facilities are not specifically addressed in federal or state regulations and must therefore be addressed in the individual chemical agent disposal facility permit. This results in the differences seen between the management and disposal requirements at each chemical agent disposal facility, since each permit is based on an individual state's regulatory interpretation of the limits necessary for these distinctive wastes. (NRC, 2007, p. 56)

Human Health Risk Assessments

Human health risk assessments (HHRAs), also sometimes called multiple-path health risk assessments or, simply, health risk assessments, are a type of risk assessment that addresses the long-term exposure of the public to the approved, long-term stack releases as they affect air, water, food, and so on and the subsequent human uptake.[20] Both BGCAPP and PCAPP will employ treatment units to remove and destroy residual agent contamination that may exist on metal parts and other solid wastes generated as part of the agent treatment process. These units themselves possess the potential to emit air pollutants. As stated previously, current laws do not specifically require an HHRA, but state regulatory agencies may require one based on broad regulatory powers.

BGCAPP

KDEP has notified ACWA program staff that it will require an HHRA for BGCAPP.[21] The HHRA methodology to be used has not been negotiated with KDEP, but it is expected to be a screening-level analysis rather than a detailed analysis since the emissions are expected to be low.[22] However, if emissions during pilot-scale testing are higher than those assumed for the HHRA, the HHRA will be revised. Since the potential requirement to conduct an HHRA is likewise applicable to commercial industrial facilities, it is a reasonable requirement for BGCAPP.

PCAPP

The CDPHE required ACWA program staff to submit a draft protocol for conducting an HHRA for PCAPP (it uses the designation "multiple-path health risk assessment (MPHRA))."[23] The protocol for performing a screening-level MPHRA was finalized in mid-2007, and the MPHRA was submitted for CDPHE review in late 2007. However, if emissions during pilot-scale testing are higher than those assumed for the MPHRA, it will be revised. Since the potential requirement for an MPHRA is likewise applicable to commercial industrial facilities, it is a reasonable requirement for PCAPP.

Finding 4-10. The same regulatory requirements concerning health risk assessments that apply to industry also apply to BGCAPP and PCAPP.

Transportation Risk Assessments

U.S. Department of Transportation (DOT) regulations for the transport of hazardous materials (49 CFR) have evolved and are modified as necessary to protect the public. Both commercial facilities and the ACWA facilities must

[16]Committee fact-finding meeting with the KDEP, Frankfort, Ky., January 24, 2008.

[17]Kevin Regan, environmental manager, BGCAPP, "Process alternates for wastes," presentation to the committee, January 23, 2008.

[18]Craig Myler, chief engineer for process and technology, Bechtel National, Inc., "PCAPP secondary waste discussion," presentation to the committee, February 13, 2008.

[19]Committee fact-finding meeting with the CDPHE, Denver, Colo., February 14, 2008.

[20]The terms health risk assessment, human health risk assessment, and multiple-path health risk assessment all apply to the same type of risk assessment.

[21]Kevin Regan, environmental manager, BGCAPP, "Process alternates for wastes," presentation to the committee, January 23, 2008.

[22]The screening-level methodology is also being used at PCAPP, as was learned at a committee fact-finding meeting with the CDPHE, Denver, Colo., February 14, 2008.

[23]Fact-finding meeting with the CDPHE, Denver, Colo., February 14, 2008.

Copyright © National Academy of Sciences. All rights reserved.

Review of Secondary Waste Disposal Planning for the Blue Grass and Pueblo Chemical Agent Destruction Pilot Plants
http://www.nap.edu/catalog/12210.html

comply with DOT regulations, including standards for packaging, marking, vehicular safety, and driver qualification. DOT regulations do not require or recommend a transportation risk assessment (TRA) for shipments of hazardous materials; however, a TRA can suggest measures to further mitigate risk, including routing to reduce the mileage, population along the route, and/or crash likelihood; additional or strengthened barriers to an uncontrolled release; and control of ambient and/or postcrash environments.

Neither the state of Kentucky nor the state of Colorado has specific requirements that address the transportation of chemical munitions or wastes derived from them. However, in the case of PCAPP, Pueblo County land use regulations at Title 17, Chapter 176, Section 050, require that the "risk of accidents occurring during the transportation of any wastes to, from, or at the prosposed site . . . be considered when proposing to locate, construct, operate, or close a hazardous waste processing site."

A TRA was prepared for PCAPP in 2003 that addressed combinations of a number of the following categories for offsite shipment: (1) uncontaminated metal parts, dunnage and ash, bioreactor salt cake, sludge, and washout solution; (2) mustard agent hydrolysate; (3) energetics hydrolysate; and (4) energetics (burster, propellant, and fuze) (FOCIS, 2003). That TRA focused on the risk of injury or fatality due to accidents involving only a heavy truck (no cargo effects) and on the fire and explosion risk due to the energetics cargo. The effects of accidents involving the cargo in the case of the first three categories were qualitatively dismissed (owing to the nonreactivity and low volatilities of the materials) and were considered to have negligible risk compared to the risk of heavy truck, cargo-independent injuries and fatalities. An environmental assessment was prepared pursuant to the National Environmental Policy Act that relied on the above TRA for uncontaminated dunnage and uncontaminated, stable propellant. However, the committee is not aware of the formal submission of the underlying TRA, or any other TRA, to Pueblo County.

Recently, CMA issued guidance on factors that must be considered and addressed for offsite shipment of agent-contaminated secondary waste. The guidance states as follows:

> When shipping waste that is determined to be above 1 VSL, a quantitative analysis will be performed to assess the potential agent hazards associated with higher levels of agent contamination and a qualitative hazard analysis concerning the nature of other constituents offered for transport. The CMA Risk Management Directorate (RMD) has developed a standard approach for performing a quantitative analysis to develop a site-specific Transportation Risk Assessment (TRA) for the chemical agent hazard. This approach shall be used by all CMA sites and activities for agent contaminated wastes above 1 VSL. The CMA RMD will assist sites in development of their TRA.[24]

It further states

> For waste greater than 1 VSL, sites should use existing hazardous waste assessment methodologies to appropriately characterize the waste to assure agent concentrations are within the bounding condition of the TRA.[25]

and

> A site-specific risk assessment should be developed to assess and establish the necessary monitoring requirements for loading, transportation, and processing operations related to secondary waste shipments greater than 1 VSL.[26]

and

> Waste shipments are to be managed in accordance with DOT regulations for appropriate state and local emergency response actions. . . .The CMA facility needs to work in concert with the receiving TSDF and the waste shipper to ensure that there are adequate response capabilities to respond to an emergency in route. [27]

The ACWA program does not have similar guidance but expects to follow the CMA guidance with respect to offsite shipment.[28]

Finding 4-11. The PMACWA has stated the intention to follow the offsite shipment guidance of the Chemical Materials Agency (CMA). However, with respect to waste characterization and monitoring, the (June 25, 2007, CMA-issued) guidance requires the use of existing hazardous waste assessment methodologies.

Recommendation 4-5. The PMACWA should seriously consider adopting the Chemical Materials Agency standard (bounding) approach in preparing transportation risk assessments.

Recommendation 4-6. When developing transportation risk assessments, the PMACWA should use the most current hazardous waste assessment methodologies for characterizing the wastes generated at BGCAPP and PCAPP.

Recommendation 4-7. A site-specific transportation risk assessment should be developed for all wastes that may be agent-contaminated and shipped from BGCAPP and PCAPP.

[24]Memorandum to CMA commanders, site project managers, project manager for chemical stockpile elimination, and project manager for non-stockpile chemical materiel, Re: Guidance for Development of Site-Specific Plans for Shipment of Chemical Agent Contaminated Secondary Waste, from Dale Ormond, acting director, CMA, dated June 25, 2007, p. 2.

[25]Ibid.

[26]Ibid.

[27]Ibid., p. 3.

[28]Committee discussions with Joseph Novad, technical director, ACWA, Pueblo, Colo., February 14, 2008.

Copyright © National Academy of Sciences. All rights reserved.

5

Public Participation

A review and analysis of public participation in the current phase of the Assembled Chemical Weapons Alternatives (ACWA) program is presented in this chapter, which also contains information gathered during visits to the communities adjacent to the BGCAPP and PCAPP sites to ascertain stakeholder perspectives on secondary waste issues.

BGCAPP STAKEHOLDER INTERACTIONS AND ISSUES

Mechanisms for Public Outreach and Involvement

The communities around the Blue Grass Army Depot (BGAD) have a long history of concern about the storage and demilitarization of chemical warfare materiel stockpile at the site. In fact, local opposition to proposed incineration, expressed through Kentucky's congressional delegation, played a key role in the creation of the Assembled Chemical Weapons Assessment program (as it was then named) in 1996.[1]

Today, BGCAPP, in conjunction with the Blue Grass Chemical Activity (BGCA) and management for the BGAD itself,[2] has a generally effective system for informing the public and eliciting comment from diverse representatives of adjacent communities, primarily Berea and Richmond. Each of the three entities operates a public affairs office, and the BGCAPP systems contractor has its own public relations staff. These officials serve as spokespersons for the Army activities. It is their job to explain proposed activities as well as unplanned events—such as leaking chemical agent containers—to the public.

However, the key institution for facilitating communications with the public is the Blue Grass Chemical Stockpile Outreach Office, funded by DOD and operated by a contractor (not, however, the systems contractor, Bechtel National, Inc.). The Outreach Office publishes fact sheets and newsletters, maintains a mailing list of 2,800, participates in local events such as the annual Safety Fair, operates a speakers bureau, and facilitates public meetings. Most important, it supports the Kentucky Chemical Demilitarization Citizens' Advisory Commission (CAC) and a CAC subsidiary, the Chemical Destruction Community Advisory Board (CDCAB).

The CAC, established by Kentucky statute in 1994, is made up of nine members appointed by the governor of Kentucky. Seven are local citizens and two are representatives of state agencies that work closely with the chemical weapons disposal program. The CDCAB, formed in 2003 under the auspices of the CAC, provides for broader public representation and has 21 voting members as well as 6 representatives of the agencies being advised by the body (see Box 5-1). In general, the CDCAB takes positions by consensus. Its meetings are independently facilitated by the Keystone Center, an organization that assists groups in acquiring information needed to make collective decisions.

Not everyone in the community supports or even follows the positions taken by the organized public participation groups. Local activists report that there is substantial community sentiment that simply supports prompt elimination of the chemical stockpile, without backing—or opposing—CDCAB positions on how to go about it.

Summary of CDCAB Secondary Waste Working Group Positions and Resolutions

The CDCAB Secondary Waste Working Group, made up of fewer than 10 CDCAB voting members, meets with regulatory agency representatives regularly and studies waste disposition issues in detail. It makes recommendations

[1]In June 2003, the name of the program was changed to the Assembled Chemical Weapons Alternatives program.

[2]BGCAPP is a Department of Defense (DOD) ACWA program facility. The BGCA is an Army Chemical Materials Agency (CMA) management entity for the chemical stockpile storage area and the site for BGCAPP within the BGAD. The BGAD encompasses additional Army activities and is under the jurisdiction of the Army Material Command.

Copyright © National Academy of Sciences. All rights reserved.

Review of Secondary Waste Disposal Planning for the Blue Grass and Pueblo Chemical Agent Destruction Pilot Plants
http://www.nap.edu/catalog/12210.html

Box 5-1
Members of Kentucky Chemical Destruction Community Advisory Board, December 2007

Voting members

Berea Chamber of Commerce
Berea civic representative
Berea College
Berea community schools
Chemical Weapons Working Group
Citizens' Advisory Commission
Citizens' Advisory Commission
City of Berea councilman
City of Richmond
Commonwealth of Kentucky state senator
Eastern Kentucky University
Madison County Emergency Management Agency
Madison County Fiscal Court
Madison County Ministerial Association
Madison County schools
National Association for the Advancement of Colored People
Pattie A. Clay Regional Medical Center
Richmond Chamber of Commerce
Richmond civic representative
Saint Joseph of Berea Hospital

Nonvoting members

U.S. Senator's Office
Kentucky Division of Emergency Management
Blue Grass Chemical Activity
Kentucky Department for Environmental Protection
Assembled Chemical Weapons Alternatives
Blue Grass Army Depot

SOURCE: Adapted from PMACWA, 2007a.

to the CDCAB as a whole. The CDCAB passed two resolutions in 2007 and one in early 2008 on waste disposition, all by consensus. Two addressed agent hydrolysate and the other addressed noncontaminated energetic wastes.

The October 8, 2007, CDCAB resolutions on treatment of noncontaminated rocket motors repeated the board's earlier position indicating potential support for either offsite recycling at a government facility or treatment at the planned BGCAPP supercritical water oxidation (SCWO) facility. The resolutions also supported study of the use of the static detonation chamber for noncontaminated rocket motors only (CDCAB, 2007).

The CDCAB generally accepts the offsite shipment and disposal of secondary wastes, including closure wastes (other than agent hydrolysate), as long as it can be shown that the level of agent contamination is below the release criteria that it accepts, which generally comport with the waste clearance levels accepted by the regulatory authorities. However, it has not yet taken positions on the disposition of activated carbon filters or the less significant waste stream comprising chemicals with expired shelf life.[3]

Other Community Positions

In addition to the official bodies, the national activist coalition—the Chemical Weapons Working Group (CWWG)—is based in nearby Berea. Although CWWG has member organizations at all sites that have stockpiles of chemical weapons, its leadership is directly involved at the Blue Grass site. CWWG's executive director is cochair of the CDCAB.

Formed in 1991, CWWG's original focus was opposition to the incineration of chemical warfare materiel, but in a document entitled "International Citizens' Accord on Chemical Weapons Disposal," it opposed the transport of stockpile munitions: "If, as a last resort, transportation of chemical weapons must be undertaken, it should be only for final treatment and/or disposal, after necessary stabilization, with the consent of affected communities" (Crow et al., 1992). While the accord does not specifically address secondary wastes, CWWG says it intends to cover what it considers to be agent-contaminated wastes. Its stated views on secondary wastes are essentially the same as those of the CDCAB as a whole (see also Box 5-2).

CWWG brings to the Blue Grass community its long-term involvement with secondary wastes at other sites, including the Newport Chemical Agent Disposal Facility in Indiana, where it has gone to court, unsuccessfully thus far, to prevent the offsite disposal of hydrolysate from the neutralization of VX nerve agent. It also reports what it considers successful cooperation with the Army's Non-Stockpile Chemical Materiel Project in helping select a technology and location for disposing of much of the waste produced from treatment of chemical weapons materiel recovered from burial sites. CWWG and its affiliates actively participated in the Core Group of the Non-Stockpile Project. Although the Core Group was initially modeled on the original ACWA Dialogue,[4] it was not confined to communities with facilities managed by the Army's chemical demilitarization programs. In fact, a CWWG spokeswoman suggested that ACWA might benefit from a national advisory body like the Core Group, which would include representatives of communities where treatment, storage, and disposal facilities (TSDFs) receive

[3]Information provided to the committee by Craig Williams, director, CWWG, March 24, 2008.

[4]The ACWA Dialogue was a group that operated during the technology selection phase of the ACWA program. It consisted of representatives of the various stakeholder constituencies and was moderated by the Keystone Center.

Copyright © National Academy of Sciences. All rights reserved.

Review of Secondary Waste Disposal Planning for the Blue Grass and Pueblo Chemical Agent Destruction Pilot Plants
http://www.nap.edu/catalog/12210.html

Box 5-2
Meeting Between Committee Chair and an Employee of the Environmental Protection Agency Assigned to Serve as Liaison to CWWG

On May 23, 2008, in an effort to ensure that the committee considers all sources of information and listens to groups that may have an impact on secondary waste management at the two ACWA sites, Peter Lederman, the chair of the committee, met with Marsha Marsh, a participant in the Intergovernmental Personnel Act Mobility Program,[1] who had been assigned to the CWWG from the U.S. Environmental Protection Agency, Division of Homeland Security. One topic was how National Research Council committees operate to ensure that they are independent. Some past studies were discussed as examples of the work the National Research Council has done over the years. At the request of Craig Williams of the CWWG, Ms. Marsh provided several pertinent documents: L. Ember in *C&EN* March 24, "Review of the modified method for analysis of VX hydrolysate; and Declaration of Michael Sommers II, Ph.D., before the U.S. District Court for Southern Indiana, Case No. 2:07-cv-101. The committee had already received these documents so no additional information was provided to the committee.

[1]The Intergovernmental Personnel Act Mobility Program provides for the temporary assignment of Federal Government personnel to state and local governments, colleges and universities, Indian tribal governments, federally funded research and development centers, and other eligible organizations.

wastes from BGCAPP and PCAPP and would be formed for the purpose of reviewing proposals for offsite waste shipment. Since many TSDFs are situated in communities of color and low-income communities, CWWG suggests that environmental justice—particularly the need to consider the cumulative impact of toxic exposures—would call for efforts to involve such communities.[5]

Issues Specific to the Treatment of BGCAPP Hydrolysates

In Kentucky, community members view DOD's 2002 selection of neutralization followed by supercritical water oxidation (SCWO) as a commitment to the community. Together with Blue Grass Army Depot, the Assembled Chemical Weapons Alternatives program has worked with the community in selecting neutralization followed by supercritical water oxidation (SCWO) as the technology to destroy the chemical weapons stored there.[6] Recent studies dealing with the possibility of offsite treatment of disposal of hydrolysate have triggered opposition.

On April 9, 2007, the CDCAB recommended that "all agent and energetic hydrolysate generated at the BGCAPP should be treated on site via the secondary treatment process identified in the 2003 Record of Decision—SCWO" (CDCAB, undated, p. 1). It listed reasons such as controversies and uncertainties associated with transportation and treatment at commercial facilities; the initial Record of Decision for the design of BGCAPP, which included the use of SCWO; the economic benefits of local work; and a belief that offsite disposition would result in minimal cost savings. In addition, members of the CDCAB told the committee that they believe that the Army has not demonstrated a method that adequately characterizes VX concentrations in VX hydrolysate.

In January 2008, in response to Army plans to expeditiously dispose of the materials contained in the three one-ton containers stored at the BGCA, the CDCAB recommended on-site storage of hydrolysate "until such time as adequate information is gathered to determine the most appropriate course of action for [its] final disposition." (CDCAB, 2008).

Although the BGAD project to dispose of ton containers is not within the scope of this study, CDCAB members made it clear to committee members they were concerned that offsite treatment of those wastes might set a precedent for the offsite disposal of BGCAPP agent hydrolysate.[7]

Kentucky opponents of offsite shipment and disposal of agent hydrolysate have made it clear that they intend to go beyond just giving advice through the CDCAB: They say they will use their political influence, the permitting process, and perhaps even legal action to oppose such shipments. While it is not clear whether they will be able to prevent offsite shipment, under existing statutes and regulations they are clearly in a position to delay it. If the Program Manager for Assembled Chemical Weapons Alternatives (PMACWA) decides to rely upon offsite treatment and disposal for neutralization wastes, the decision may delay the demilitarization process itself (see Chapter 6).

Still, at least one member of the community has spoken forcefully in favor of offsite disposal of hydrolysate, questioning the effectiveness of the SCWO process (Shannon, 2008).

PCAPP STAKEHOLDER INTERACTIONS AND ISSUES

Mechanisms for Public Outreach and Involvement

The Pueblo community, like its counterpart in Kentucky, has a long history of public involvement in the oversight

[5]Comments to the committee by Elizabeth Crowe, Kentucky Environmental Foundation, at a public meeting, January 24, 2008.

[6]See http://www.pmacwa.army.mil/ky/technology.htm.

[7]Comments made at a public meeting on January 24, 2008.

Copyright © National Academy of Sciences. All rights reserved.

Review of Secondary Waste Disposal Planning for the Blue Grass and Pueblo Chemical Agent Destruction Pilot Plants
http://www.nap.edu/catalog/12210.html

of storage and disposal of chemical warfare materiel at the Pueblo Chemical Depot (PCD). Local activists, in coalition with those in Kentucky, persuaded Congress to establish alternatives to incineration.

The ACWA program at Pueblo operates a robust, tiered public outreach and involvement program. In pursuing the goal, which is to provide consistent opportunities for public involvement and encourage community participation in the decision-making process, it collaborates with the Colorado Chemical Demilitarization CAC; involves elected officials, regulatory and emergency management agencies, and the workforce; and informs other community entities (PMACWA, 2008c).

The Pueblo Chemical Stockpile Outreach Office maintains a mailing list of more than 2,000 people, publishes a newsletter and project updates, and runs a speakers bureau that makes presentations to civic groups, business organizations, local officials, and more than 3,000 students each year. In particular, the committee is pleased with the outreach office's efforts to inform difficult-to-reach constituencies, such as Spanish-speaking migrant workers in the community of Avondale, near PCD. The outreach office also supports the quasi-governmental local reuse authority, which is planning for the reuse of PCD real estate once demilitarization is completed.

At the time the committee visited Pueblo (see Appendix A), the local ACWA public affairs position was vacant and the PCD public affairs officer was a new hire. It would seem obvious that when potentially controversial decisions are being made, the Army's various public affairs and involvement programs in Pueblo should be fully staffed.

The focal point for public discussion of the Army's demilitarization plans at Pueblo is the CAC. Formed in 1993, the commission's members are appointed by the Colorado governor and administered by a Colorado Department of Public Health and Environment (CDPHE) official (see also Box 5-3). While some CAC documents are found on the ACWA Web site, CDPHE maintains a complete archive of CAC activity. Its Web site explains as follows:

> The Citizens' Advisory Commission consists of nine members—seven are members of the community at-large and two are state officials. The Governor appointed each Citizens' Advisory Commission member to serve an unlimited term at his or his successor's discretion. Although the Colorado Citizens' Advisory Commission receives limited federal funding from the Department of Defense, it operates independent of Army influence.[8]

Box 5-3
Members of Colorado Chemical Demilitarization Citizens' Advisory Commission

Chair (local resident)
District Attorney's Office
County Commissioner
Plumbers and Pipefitters Union
Retired judge
Adjacent property owner
Sierra Club
Governor's Office of Policy and Initiatives
Colorado Department of Public Health and the Environment

SOURCE: Adapted from PMACWA, 2007b.

CAC Positions and Resolutions

Since its inception, the CAC has been supportive of the design proposed in 2003 for PCAPP—that is, neutralization followed by the biological treatment of hydrolysate. For example, in June 2005 it resolved as follows:

> The Colorado Chemical Demilitarization Citizens' Advisory Commission (CAC) and the Pueblo community are committed to the safe and effective destruction of chemical weapons. The use of neutralization/biotreatment, with as much of the process completed on site, remains, in the opinion of the CAC and a majority of the citizens in the Pueblo community, the safest and most publicly acceptable method for the destruction of the weapons stored at the Pueblo Chemical Depot (PCD).[9]

In fact, CAC members assert that their support expedited the regulatory review of the program by CDPHE.

The CAC has consistently opposed the offsite shipment of untreated hydrolysate (see next section). It has also reviewed the offsite shipment of dunnage (wooden pallets and boxes) and energetics (propellants, fuses, and bursters) and issued a series of recommendations in which it opposes the offsite shipment of agent-contaminated dunnage and energetics as well as unstable energetics. Before the Army submission of the Waste Analysis Plan for PCAPP, the CAC called for analytical procedures to determine reliably whether any such substances are contaminated with agent (Colorado CAC, undated; Vincent, 2005).[10]

The CAC has supported the recycling of decontaminated munitions bodies, but it has not directly taken positions on other secondary or closure wastes, such as personal protective equipment and carbon filters.[11] The CAC would probably

[8]See http://www.cdphe.state.co.us/hm/pcdcac.htm.

[9]Letter from John Klomp, chair, Colorado CAC, to PMACWA, June 29, 2005.

[10]Ibid.

[11]Letter from Irene L. Kornelly, chair, Colorado CAC, to Peter Lederman, committee chair, February 12, 2008.

Copyright © National Academy of Sciences. All rights reserved.

Review of Secondary Waste Disposal Planning for the Blue Grass and Pueblo Chemical Agent Destruction Pilot Plants
http://www.nap.edu/catalog/12210.html

apply the same principles that it has applied to dunnage, metals, and energetics. That is, communities near PCD want assurances that materials are not contaminated with mustard agent before being shipped offsite for reuse or disposal.

Issues Specific to the Treatment of PCAPP Hydrolysates

The CAC and other active members of the Pueblo community have repeatedly opposed the offsite shipment of agent hydrolysate for treatment and disposal. They view biotreatment as a proven, reliable technology and consider any transportation of agent hydrolysate to be inherently more risky than keeping it onsite for further treatment.

On January 31, 2007, the CAC endorsed the following recommendation of its Design Options Working Group (DOWG):

> The Design Options Working Group recommends to the CO CAC that the CO CAC affirm its position that on-site treatment of hydrolysate be conducted at PCAPP and that off-site treatment of hydrolysate be rejected. This decision is based, in part, on review of the financial analysis presented to the CO CAC at the December 8, 2006 meeting and review of the recently released Mitretek and Lean-Six-Sigma reports.[12]

That is, the CAC doubted that offsite treatment would save time or money, but it left the door open should new evidence emerge. In its February 2007 letter transmitting the above resolution to the ACWA leadership, it said that "as always, the CO CAC and the DOWG are open to reviewing this decision if new information on hydrolysate transportation is made available to the public."[13]

Opposition around Pueblo to the shipment of agent hydrolysate is based on essentially the same arguments as the opposition at Blue Grass (see earlier section "Issues Specific to the Treatment of BGCAPP Hydrolysates"). But the Pueblo opponents openly make an argument supported by the two studies mentioned in the January 31, 2007, resolution—namely, that anticipated opposition to offsite shipment will make it impossible to save money. Although the Army informed the CAC that $150 million might be saved if the Pueblo agent hydrolysate were shipped offsite, the CAC replied that the projected savings ignored "risk factors such as community opposition and permitting delays to name just two possible risks."[14] Put another way, community members oppose this scenario because some of the community members might oppose it, causing delays and cost increases. Because offsite treatment would require a permit modification and a new Pueblo County certification of designation, opponents could indeed delay any such change. As in Kentucky, opponents of offsite shipment and disposal are clearly prepared to utilize political and regulatory strategies to prevent or at least delay offsite hydrolysate disposal. Chapter 6 describes the additional permitting and environmental assessment requirements that would be triggered by a decision to ship hydrolysate offsite.

While there is active community opposition to offsite shipment of agent-contaminated hydrolysate, most parties agree that the community at large is more concerned about the continuing presence of chemical weapons in the area. The local daily newspaper, the *Pueblo Chieftain*, represented this sentiment in an editorial applauding the President's fiscal year 2009 proposal to boost ACWA funding: "This project has been delayed far too long. It's time to stop the foot-dragging and get rid of these aging munitions" (Chieftain, 2008).

UNDERLYING FACTORS IN BOTH COMMUNITIES

The committee believes that the dominant community point of view—opposition to offsite hydrolysate treatment—in both Kentucky and Colorado is a function of four principal considerations:

1. In the early 1990s, community groups in stockpile host communities agreed not to support shipment to other communities. This was in part a strategic decision. The groups who formed the CWWG, some of whom had previously espoused a not-in-my-backyard philosophy, found that their alliance amplified their political effectiveness at the national level.
2. The belief that hydrolysate may contain levels of chemical agent that are too hazardous to transport safely. Some community members expressed concern that the Army and its contractors do not yet have adequate methods for sampling and analyzing hydrolysate in transportation containers.
3. The understanding that ACWA had committed to onsite hydrolysate treatment when it signed the records of decision for the two sites in 2002 (Pueblo) and 2003 (Blue Grass). Community members are dismayed and believe that the offsite option keeps coming up because DOD has already decided to implement it.
4. The concern that offsite treatment of agent-contaminated wastes (even at low levels) may take place in economically depressed communities that call for environmental justice because they already may be disproportionately exposed to environmental hazards and in many cases lack the resources and expertise to challenge such a decision.

Critics of offsite hydrolysate disposal have firmed up their opposition in response to the shipment of hydrolysate from the Newport Chemical Depot. After public opposition caused treatment facilities in Ohio and New Jersey to reject

[12]Letter from John Klomp, chair, Colorado CAC, to Michael Parker, director, CMA, February 14, 2007.

[13]Ibid.

[14]Ibid.

Copyright © National Academy of Sciences. All rights reserved.

Review of Secondary Waste Disposal Planning for the Blue Grass and Pueblo Chemical Agent Destruction Pilot Plants
http://www.nap.edu/catalog/12210.html

such shipments, the Army shipped the waste to Port Arthur, Texas, without announcing it to the general public, although the shipments were coordinated through agencies of the affected states. Opponents of offsite hydrolysate disposal vow to prevent a similar result at Blue Grass and Pueblo.

FINDINGS AND RECOMMENDATIONS

Finding 5-1. Through the Kentucky Chemical Demilitarization Citizens' Advisory Commission (CAC) and the CAC's subsidiary Chemical Destruction Community Advisory Board, as well as public affairs activities that include the Blue Grass Chemical Stockpile Outreach Office and public meetings, the communities around the Blue Grass Army Depot (BGAD) have ample opportunity to learn about BGCAPP operations as well as proposed secondary waste disposal. The ACWA program and its contractors do an effective job of cooperating with and supporting these organizations.

Finding 5-2. Through the Colorado Chemical Demilitarization Citizens' Advisory Commission, as well as a public affairs program that includes the Pueblo Chemical Stockpile Outreach Office and its field activities, the communities around Pueblo Chemical Depot have ample opportunity to learn about PCAPP operations as well as proposed secondary waste disposal. The ACWA program and its contractors do an effective job of cooperating with and supporting these organizations.

Finding 5-3. Communities that might be affected by the transportation and offsite disposal of secondary and closure waste do not at present have an official forum through which they can interact with the ACWA program.

Finding 5-4. Members of the communities around the Blue Grass Army Depot and the Pueblo Chemical Depot have not expressed serious concern about the disposition of secondary wastes other than hydrolysate from BGCAPP and PCAPP. However, they want technical assurance that the materials are not contaminated with agent, as defined by the minimum detection level, before being transported offsite for reuse or disposal.

Finding 5-5. There is substantial local opposition to offsite shipment and disposal of hydrolysate from both BGCAPP and PCAPP. Local groups can be expected to forestall any such action by protracting the permitting process or the environmental review (if there is one) as well as by instigating political action and litigation.

Recommendation 5-1. To avoid potential misunderstandings and obstacles, the PMACWA should explain in advance, and solicit feedback on, any proposals to ship wastes from BGCAPP and PCAPP. Special efforts should be made to include a diverse representation of the stakeholder communities.

Recommendation 5-2. The PMACWA should explain to the public precisely how it plans to determine whether a particular waste stream is suitable for shipment, including analytical procedures for showing whether the stream contains any residual contamination by an agent or its by-products.

Recommendation 5-3. The PMACWA should identify and factor into its decision-making processes the potential consequences of public opposition to offsite shipment and disposal of hydrolysate.

Recommendation 5-4. Before making any final decision, the PMACWA should consider expanding its public forum to represent key stakeholder communities as it considers the possible offsite shipment of hydrolysate from the primary neutralization of agent.

Copyright © National Academy of Sciences. All rights reserved.

6

Alternative Offsite Waste Management Options

The current designs for both BGCAPP and PCAPP include the capability for treating secondary wastes onsite. This reflects the initial design approach, which was to treat all contaminated or possibly contaminated hazardous wastes onsite. However, the shipment of certain secondary wastes to suitable offsite treatment, storage, and disposal facilities (TSDFs) appears to present significant advantages, such as lower investment, a smaller footprint for the facility, and a shorter time for closure. Indeed, it is anticipated that some waste streams that are not contaminated or that have been treated onsite will be sent to an appropriate TSDF for ultimate disposal. This chapter presents possible alternatives to onsite treatment of some of the largest waste streams generated during operations and closure.

The committee considered only the largest waste streams for both BGCAPP and PCAPP: both agent and energetics hydrolysates,[1] metal, dunnage, activated carbon, and brines generated during the operations phase and significant quantities of metal, concrete, decontamination solution, and activated carbon during closure. The total quantities of these materials (other than hydrolysates) that have been estimated to date were given in Table 4-2 for BGCAPP and Table 4-6 for PCAPP. Quantities of hydrolysates estimated to be generated at both sites are given in Table 6-1.

A number of secondary waste streams, such as decontaminated personal protective equipment and aluminum filter cake, are presently expected to be shipped offsite, as discussed in Chapter 4. These wastes are similar to many industrial waste streams that are managed using offsite disposal at appropriate permitted TSDFs, including many aqueous caustic wastes that contain small amounts of organic matter. In many cases, those organics are more refractory (i.e., less amenable to destruction by oxidation) than agent or agent degradation products. Many solid waste materials with organics adsorbed on them are also managed successfully in appropriate permitted commercial TSDFs.

As discussed in more detail below, it is worthwhile noting that the secondary wastes being considered here are not chemical agent or streams with significant agent, agent degradation, or other organic material concentrations. They are typically liquids with trace concentrations of organics, if any, or inert solids with no or very low levels of organics adhering to the solid, so long as the clearance criteria (e.g., waste control limits) are met.

Finding 6-1. The shipment of certain secondary wastes to suitable offsite TSDFs could have significant advantages. Among these are savings in facility infrastructure and equipment costs, a smaller footprint for the facility, and a shorter time for closure.

TABLE 6-1 Anticipated Quantities of Hydrolysates from BGCAPP and PCAPP Operations (gallons)

Hydrolysate Type	BGCAPP	PCAPP[a]
GB (sarin)	921,000	
VX	166,000	
H (mustard agent)	241,000	
HD/HT (mustard agent)		7,160,000
GB/VX rocket energetics	4,323,266	
H projectile energetics	407,862	
Total	6,059,128	7,160,000

[a]Mustard agent HD/HT hydrolysate is the only hydrolysate expected to be produced at PCAPP. Uncontaminated energetics are to be shipped offsite, and any contaminated energetics would be processed in an explosive destruction technology unit.

SOURCE: Sam Hariri, lead process engineer, BGCAPP, "Process design overview for Blue Grass Chemical Agent Destruction Pilot Plant (BGCAPP)," presentation to the committee, January 23, 2008; and FOCIS, 2003.

[1]As discussed in earlier chapters, energetics hydrolysate is expected to be produced only at BGCAPP. Noncontaminated energetic materials at PCAPP will be sent offsite for treatment, and any contaminated energetic materials will be treated in an explosive destruction technology unit.

Copyright © National Academy of Sciences. All rights reserved.

Review of Secondary Waste Disposal Planning for the Blue Grass and Pueblo Chemical Agent Destruction Pilot Plants
http://www.nap.edu/catalog/12210.html

MAJOR WASTES THAT SHOULD BE CONSIDERED FOR OFFSITE DISPOSAL

Agent Hydrolysates

At BGCAPP, destruction of munitions containing GB-, VX-, and mustard agent H will generate three different agent hydrolysate streams over the course of the processing operations (see Table 6-1). At PCAPP, only one agent hydrolysate stream, from mustard agent treatment, is generated. All will be highly caustic and consist of two or three phases: primarily a water phase, a very small organic phase, and some mixed organic/water emulsion. In the experience of the committee, similar caustic streams containing some organic chemicals are routinely shipped by road to TSDFs following the appropriate Resource Conservation and Recovery Act (RCRA) and Department of Transportation (DOT) regulations. Shipments from Newport Chemical Agent Disposal Facility (NECDF) of VX hydrolysate and from Aberdeen Chemical Agent Disposal Facility (ABCDF) of mustard agent hydrolysate have successfully demonstrated the viability of disposing of these waste streams offsite.

Energetics Hydrolysate

At BGCAPP and PCAPP, energetics, which include the burster charges, fuzes, and contaminated propellants, are sent to an energetics batch hydrolyzer for treatment to 99.999 percent destruction efficiency. Because the neutralization step for the treatment of energetics is similar to that step for agent, the energetics hydrolysate will be similar to an agent hydrolysate but with a much lower residual agent concentration and some organic energetic residues. Hydrolysate produced during rocket operations may also contain some polychlorinated biphenyls (PCBs) from agent-contaminated shipping and firing tubes (see Chapter 2). If the energetics hydrolysate is to be shipped offsite, it will have to be sampled and analyzed for PCB contamination. If the hydrolysate analysis demonstrates that PCBs are present in excess of 50 ppm, BGCAPP would have to comply with Toxic Substances Control Act (TSCA) regulations, including the stipulation that further treatment of this waste take place only at an appropriate TSCA-approved disposal facility. For disposal of liquid containing between 50 ppm and 500 ppm of PCBs, the only approved disposal facilities are a TSCA-compliant incinerator, a high-efficiency boiler, or a chemical landfill (40 CFR 761.60).

Activated Carbon

An estimated 104,000 lb of agent-contaminated activated carbon from BGCAPP will have to be disposed of. Based on generator knowledge, there will also be a significant amount of additional noncontaminated carbon. The generated carbon waste will be treated and disposed of primarily at the end of operations. The amount of activated carbon that will have to be disposed of from PCAPP will be in excess of 100,000 lb, about 20 percent of which (based on generator knowledge) is expected to be contaminated with agent at >1 VSL. Generator knowledge in the case of activated carbon will rely on the agent-monitoring sensors located between the carbon beds through which the effluent gas streams sequentially flow. If the sensor detects breakthrough, the beds upstream and the one downstream will be considered contaminated.

In industrial practice, it is most common to regenerate the carbon in place. If this is not possible because of the system configuration or for some process reason, the spent carbon is shipped to a reprocessor to regenerate the carbon. It is not possible to regenerate the spent carbon at BGCAPP or PCAPP because the offgas treatment unit design does not allow taking any of the beds out of service for regeneration.

Spent activated carbon that has been contaminated with agent has been successfully shipped offsite to a permitted TSDF for disposal from several of the currently operational chemical agent disposal facilities. These shipments were made from the Anniston, Alabama, and Aberdeen, Maryland, chemical agent disposal facilities in double containers using headspace analysis to determine the suitability for shipment. The spent activated carbon generated at both BGCAPP and PCAPP will have the same contaminants as the carbon already shipped offsite from other chemical agent disposal facilities.

Carbon that is not contaminated with agent can, as is standard industry practice, be shipped to a reprocessor.

Concrete

Concrete waste is a major waste stream during closure. An estimated 90 tons of concrete waste will be generated at BGCAPP and at least as much will be generated at PCAPP. Most of this concrete (including rebar) will not be contaminated based on the experience at Johnston Atoll Chemical Agent Disposal System, where the concrete that was scabbled from surfaces to a depth of 0.25 inch was considered contaminated. It was later found that much of this was not contaminated. At BGCAPP and PCAPP, all surfaces will be coated with an epoxy coating to minimize contamination. Therefore, it may be possible to scabble less concrete and thus generate less potentially contaminated concrete. It was also found that the concrete holds and also decomposes the agent. It will be necessary to confirm this, and the committee expects that an effort will be made to do this at sites that will undergo closure well before BGCAPP and PCAPP. If sufficient agent decomposition on concrete proves to be the case, shipment of concrete, both contaminated and noncontaminated, should become an option.

The option will require some testing, as well as finding an appropriate TSDF and appropriate shipping containers. Noncontaminated concrete should be manageable just like

Copyright © National Academy of Sciences. All rights reserved.

Review of Secondary Waste Disposal Planning for the Blue Grass and Pueblo Chemical Agent Destruction Pilot Plants
http://www.nap.edu/catalog/12210.html

other normal construction debris, making special handling unnecessary.

Metal

Significant amounts of waste metal—about 660 tons at BGCAPP and significantly more at PCAPP—will be generated during closure in addition to the decontaminated munitions bodies generated during operations. In addition, metal waste will be generated as a result of maintenance operations. Small parts can be treated in the metal parts treater (MPT) at BGCAPP or the munitions treatment unit (MTU) at PCAPP without hurting operations. However, the decontamination of metal from closure operations using those units will require a great deal of cutting so that parts can fit, and this requirement may become the critical path for closure. In industrial operations, metal parts are cleaned and then recycled. For major pieces of equipment and piping, a similar approach would appear to be viable for both BGCAPP and PCAPP. Pumps and other parts that have intricate configurations will probably have to be treated in the MPT or MTU such that they will have been heated to 1000°F for at least 15 minutes before leaving engineering control. Large pieces, following industrial practice, should be decontaminated and then offered as scrap metal to an appropriate smelter or recycler, as provided for under the RCRA scrap metal exclusion provisions.

Brines

At BGCAPP, brines that contain salts will be produced at the rate of between 10,000 and 25,000 lb/hr depending on the particular operation. At PCAPP, salt-containing brines will be produced at the rate of about 600 lb/hr of filter cake containing 50 percent solids. Brines and brine salts are routinely disposed of offsite at all currently operating chemical agent disposal facilities. Those brines are the result of operations that are similar to those anticipated at BGCAPP and PCAPP. They are tested for the presence of agent residue, and concentrations below the method detection limit (MDL) and clearance criteria have been found.

ANALYTICAL CONSIDERATIONS

Certain public stakeholders have questioned the accuracy of the method for measuring residual agent in VX hydrolysate and are concerned that VX can re-form in the hydrolysate matrix. The committee believes that technical Risk Reduction Program (TRRP) activity 11 (discussed in Chapter 4 and Appendix D) shows that the cool-on-column procedure now being used does properly measure residual VX levels in properly prepared (well-mixed) samples of the hydrolysate and that VX does not re-form in the hydrolysate. There is less certainty about whether there is agent in the organic layer as a result of inadequate mixing during sampling. The purpose of the analyses of the organic layer reported in TRRP activity 11 was to characterize the main components, not to bound the concentration of VX in the organic layer per se. A low-detection-limit analysis of the organic layer for agent could resolve this issue.

Finding 6-2. The amount of residual agent in the organic layer of VX hydrolysate from caustic hydrolysis is not known and is a cause of anxiety among certain members of the public even though the organic layer accounts for a very minor portion of the total liquid.

Recommendation 6-1. The PMACWA should rerun bench-scale hydrolysis reactions for VX and measure residual agent and agent degradation products in the organic layer, using techniques having detection limits comparable to the limits achieved for analyses of the aqueous layer conducted during TRRP activity 11.

OFFSITE DISPOSAL ISSUES

Transportation Risk

The potential for accidents during transportation that would impact the public and the environment is a concern of stakeholders, as discussed in Chapter 5. Hydrolysate and other wastes have so far been shipped safely over the course of the U.S. chemical stockpile disposal program. However, this remains an issue because chemical shipments can and do experience accidents. The Army continues to address this issue.

In the section "Transportation Risk Assessments" in Chapter 4, it was reported that the Army's Chemical Materials Agency (CMA) had written specific guidance for offsite shipments of selected secondary wastes from currently operating chemical agent disposal facilities. This guidance, which the Assembled Chemical Weapons Alternatives (ACWA) program expects to follow, includes the following:

> Risks for shipping agent contaminated wastes are effectively mitigated to acceptable levels by utilizing equipment, processes, and regulations established by the U.S. Department of Transportation (DOT) Pipeline and Hazardous Materials Safety Administration for over-the-road transportation and under RCRA for managing waste. Existing DOT regulations sufficiently address the agent hazard and other hazardous constituents in the majority of potential waste streams. The DOT regulations, therefore, are expected to be adequate controls for most shipments. However, sites need to ensure that major hazardous constituents are identified, evaluated, and adequately controlled. [2]

[2]Memorandum to U.S. Army CMA commanders, site project managers, the project manager for chemical stockpile elimination, and the project manager for non-stockpile chemical materiel, Re: Guidance for Development of

Copyright © National Academy of Sciences. All rights reserved.

Review of Secondary Waste Disposal Planning for the Blue Grass and Pueblo Chemical Agent Destruction Pilot Plants
http://www.nap.edu/catalog/12210.html

> Sites need to consult with their site environmental office to ensure that the shipment complies with RCRA and NEPA [National Environmental Policy Act].[3]

The PCAPP transportation risk assessment for hydrolysate (PMACWA, 2003) quantified the risks of heavy truck accidents independent of the hydrolysate cargo. The report concluded that the risks from a hydrolysate spill would be negligible because of the low volatility. Either that assessment was a qualitative one, or the quantitative supporting analysis was not provided. It is important to provide quantitative data to calm the anxiety that can be triggered by the prospect of offsite transportation.

Finding 6-3. A quantitative risk assessment is an important tool to provide insights on means to provide increased risk mitigation commensurate with the levels of residual agent contamination in offsite shipments of secondary waste.

Recommendation 6-2. The PMACWA should formally require a quantitative transportation risk assessment for the shipment of secondary waste with agent contamination >1 VSL from chemical agent disposal facilities even though the Department of Transportation has no such regulation.

Finding 6-4. Some members of the public and state regulators are concerned about the health risks of hydrolysate transport and believe there is a need for emergency planning along the route.

Recommendation 6-3. The PMACWA should perform a quantitative transportation risk assessment for hydrolysate, including a quantitative assessment of the human health consequences of hydrolysate spills with and without a fire. This assessment needs to be completed to facilitate discussions with the public and regulators about the hydrolysate offsite shipment alternative.

Recommendation 6-4. The PMACWA should prepare a prototypical emergency response plan for hydrolysate shipment, including the possibility of a fire or the occurrence of natural disasters such as floods. This plan would be the starting point for setting contractual requirements for the TSDF and the shipper. The prototype plan needs to be completed to facilitate discussions with the public and regulators about the hydrolysate offsite shipment alternative.

Permit Modification

Both BGCAPP and PCAPP currently have RCRA research, design, and development (RD&D) permits for the storage, treatment, and disposal of chemical agent and munitions. At this time, the permits and permit applications provide only for the onsite hydrolysate treatment units—supercritical water oxidation (SCWO) for BGCAPP and biotreatment for PCAPP. Permit modifications would have to be filed if these units were to be eliminated and hydrolysate was to be shipped offsite for further treatment and disposal.

At PCAPP, the Colorado Department of Public Health and Environment (CDPHE) said that a modification to eliminate the use of the biotreatment unit and to add a loading facility for offsite hydrolysate shipments would probably be a Class 2 modification (one comment period of 6 months) or a Class 3 modification (two comment periods of longer duration).[4] Such a modification would also have to be approved by Pueblo County, and a new certificate of designation (COD) would have to be issued. No operations could be initiated until the Class 2 modification is approved and the COD is issued.

At BGCAPP, the Kentucky Department of Environmental Protection (KDEP) indicated that if the first-of-a-kind SCWO treatment unit is eliminated, it might deem the RD&D approach inappropriate, and in that case, BGCAPP would have to apply for and receive a standard RCRA operating permit under a Part B application (Bizzigotti et al., 2006).

On the basis of discussions with state regulators, Mitretek concluded that if offsite shipment of hydrolysate is adopted, neither BGCAPP nor PCAPP would be allowed to begin operations until an appropriate TSDF had been selected and a contract for receipt of the waste was in place (Bizzigotti et al., 2006).

In addition, the receiving TSDF might be required to obtain its own permit modification to treat the waste if it did not already have authority to treat this type of waste—i.e., caustic with organic phases and certain underlying constituents with land disposal restriction (LDR) standards. However, since agent-contaminated wastes generated at BGCAPP and PCAPP are only state-listed wastes in Kentucky and Colorado, respectively, out-of-state TSDFs would not be required to amend the RCRA permit granted in their state to accept those state-specific waste codes.

Waste Characterizations

To ship secondary hydrolysate offsite, the receiving TSDF must have a complete characterization of the waste to be received and a determination that the treatment is sufficient to meet its own permit conditions, which can include wastewater discharge, air emissions, and land disposal of treated waste residue. Hydrolysate from both BGCAPP and PCAPP will be a listed waste under state RCRA regulations.

Site-Specific Plans for Shipment of Chemical Agent Contaminated Secondary Waste, from Dale Ormond, acting director, CMA, June 25, 2007, p. 2.

[3]Ibid., p. 3.

[4]Committee fact-finding meeting with the CDPHE, Denver, Colo., February 14, 2008.

Copyright © National Academy of Sciences. All rights reserved.

Review of Secondary Waste Disposal Planning for the Blue Grass and Pueblo Chemical Agent Destruction Pilot Plants
http://www.nap.edu/catalog/12210.html

In addition, it might have underlying listed hazardous waste constituents or additional hazardous characteristics that must be considered before shipment offsite for treatment and ultimate disposal.[5]

Finding 6-5. Hydrolysate shipments are similar to industrial chemical shipments in that characterization must be conducted, with that characterization used to ensure compliance with DOT requirements.

Under the RCRA RD&D permits issued to both sites, waste may be shipped offsite only once it has met agent-related criteria set in the permit, as reflected in the state-approved waste analysis plan (WAP). PCAPP submitted a WAP with its Stage 3 permit modification that outlines the waste control limits for each secondary waste to be shipped offsite, including hydrolysate. However, the WAP has not yet been approved by the CDPHE.

The CDPHE has said there are various options for offsite shipment of hydrolysate.[6] These options would require destruction of the agent by hydrolysis, followed by shipment to a publicly owned treatment works or a Safe Drinking Water Act permitted underground injection control unit. They are in addition to using an appropriate TSDF. The hydrolysate would have to be manifested as a hazardous waste and accompanied by an LDR notice of constituents and a certification of agent treatment.

BGCAPP has not yet developed its WAP, so there are still no proposed waste management criteria for shipment of hydrolysate offsite. It is possible that options similar to those discussed above for PCAPP could be available to BGCAPP once a management standard and release criteria are established in a state-approved WAP.

Secondary wastes shipped offsite for treatment and disposal must meet any LDRs that would apply to the waste. Normally under an LDR, before a hazardous waste can be landfilled,[7] it must be shown that the waste has been treated to or meets treatment standards established in the regulations (40 CFR 268). A treatment standard can be expressed as either numeric concentrations of hazardous constituents or as a required treatment technology.

For hydrolysate and other secondary wastes from these facilities, the agent-related, state-listed waste code is the main waste code; however, other characteristic and underlying waste codes may also apply to this waste. As a general principle, a hazardous waste must meet all applicable treatment standards to be eligible for land disposal. For purposes of the LDRs, a generator with a listed hazardous waste must determine if the waste also exhibits any hazardous waste characteristics (Section 262.11(c)). If the listed waste also exhibits a characteristic of hazardous waste, the treatment standard for both waste codes must be met. In this case, both Kentucky and Colorado listed the wastes but did not publish any corresponding LDR treatment standards. Normally, a TSDF in the state that has so listed a waste cannot accept a waste without the appropriate LDR notification and/or certifications. However, a TSDF in another state would not require such LDR documentation for a waste listed only in Kentucky or Colorado.

National Environmental Protection Act

Under the National Environmental Policy Act (NEPA), both BGCAPP and PCAPP prepared and issued an environmental impact statement (EIS) covering the construction and operation of the chemical agent treatment facilities. Neither EIS nor the corresponding records of decision address offsite shipment of hydrolysate. Under NEPA regulations, if the new proposed action is not adequately covered in an existing EIS or environmental assessment, the site would have to prepare an environmental assessment, which would result in either a finding of "no significant impact" or a requirement to prepare a supplemental EIS.

INDUSTRIAL PRACTICES

In industry, large quantities of liquid waste having minute levels of organic and inorganic contaminants are routinely managed by shipment to and treatment at offsite TSDFs. The liquid waste is characterized by the generator in the form of a waste profile. TSDFs in turn assess their capabilities to properly treat the waste such that it meets existing regulatory requirements such as LDRs and TSDF permit provisions. The TSDFs that appear to be able to successfully treat the waste are visited and evaluated to confirm that their treatment processes meet company and local, state, and federal requirements.

Once the waste is accepted by a TSDF, the TSDF is responsible for meeting regulatory and permit requirements as well as safety and emergency response needs for management of the waste to ensure minimal impact on the public. Contracts will usually call for a generator to carry out independent, periodic inspections of the TSDF to verify that contractual terms are being met. Shipments are subject to RCRA and DOT regulations on transportation, packaging, labeling, placarding, manifesting, and emergency response contact information. For chemicals that pose unique hazards to emergency responders, it is a common industrial practice to have personnel trained in emergency response available around the clock to respond to whatever emergencies might develop.

Finding 6-6. A common industrial practice applicable to the safe transportation of agent hydrolysate involves having personnel available around the clock who are trained in

[5] "Land disposal restrictions and PCAPP wastes," document provided to the committee, February 19, 2008, by Douglas Knappe, CDPHE.

[6] Ibid.

[7] That is, placed on the land, but this also includes incineration in that the listed waste codes are attached to the ash that is ultimately disposed of to the ground.

Copyright © National Academy of Sciences. All rights reserved.

Review of Secondary Waste Disposal Planning for the Blue Grass and Pueblo Chemical Agent Destruction Pilot Plants
http://www.nap.edu/catalog/12210.html

and knowledgeable about the hazards of the material being transported and the actions to be taken to respond to the various emergencies that would have been identified by a transportation risk assessment.

In industrial practice, the generator of the hazardous waste is responsible for selecting the transporter(s) of the waste and ensuring that appropriate emergency plans are in place. This responsibility likewise extends to shipment of the secondary wastes discussed in this report.

The standard operating procedures of any entity that ships hazardous wastes should include the following:

- Guidance for emergency response,
- Training of emergency response personnel,
- Programs for responding to transportation emergencies,
- Vehicle inspections and maintenance,
- Ensuring driver compliance with DOT requirements, and
- Development of contingency plans for spills.

Personnel responding to emergencies need to be trained for the various emergency response scenarios, evaluated to ensure medical fitness, and supplied with necessary personnel protective equipment, as well as trained in the use of special equipment for emergencies. For offsite shipments, BGCAPP and PCAPP will need to verify that personnel designated as responders satisfy these requirements. *The Emergency Response Guidebook: A Guidebook for First Responders During the Initial Phase of a Dangerous Goods/Hazardous Materials Transportation Incident,*[8] is used widely in industry for ensuring safe emergency response.

It is very important to comply with DOT standards for driver selection, qualification, and performance; vehicle inspection, maintenance, and repair; product container selection and authorization; container and vehicle marking, labeling, and placarding; and hazardous material shipping documents. Other transportation safety enhancements include reviews of product handling, loading, and unloading procedures and evaluation of the safety programs for contract drivers.

A key part of emergency response is the development of contingency plans for spills. A spill of waste liquids from BGCAPP or PCAPP may cause significant concern on the part of the community. Every effort should be made to avoid such spills, but if one occurs, it should be contained to minimize its impact on the community. To determine the potential impact of a spill, it is suggested that dispersion analyses be conducted for potential spill scenarios and the information be made available for emergency response personnel. Transportation routes should be assessed to minimize the possibility of spills into water. Spill containment equipment should be available to the emergency response teams.

[8]Available at http://hazmat.dot.gov/pubs/erg/erg2008_eng.pdf. Last accessed July 17, 2008.

It is critical that spill contingency plans also consider natural disasters such as hurricanes and floods. Plans with well-defined accountability and procedures for evacuation or containment are necessary to mitigate damage.

Recommendation 6-5. For both BGCAPP and PCAPP, the selection of an appropriate TSDF for the treatment of agent hydrolysates and other secondary wastes should take into account transportation issues, emergency response considerations, and public and community interests.

Recommendation 6-6. The PMACWA should consider incorporating the good industrial practice of having trained emergency response personnel at BGCAPP and PCAPP available around the clock to respond to transportation accidents.

PAST EXPERIENCE WITH OFFSITE DISPOSAL

The Army has been disposing of secondary wastes to offsite facilities from all of the currently operating chemical agent disposal facilities and continues to do so. Of particular interest are the experience at the ABCDF in Maryland with mustard agent hydrolysate and the experience at the NECDF in Indiana with VX hydrolysate.

VX hydrolysate at or below a concentration of 20 ppb VX has been successfully shipped to a commercial TSDF from the NECDF in Indiana since April 2007. The NECDF used hydrolysis technology to destroy the bulk nerve agent VX stockpile at Newport Chemical Depot. The same technology will be used at BGCAPP, but with a different reactor configuration. To satisfy Chemical Weapons Convention requirements for irreversible treatment, the Army selected Veolia Environmental Services to treat the hydrolysate from NECDF at its Port Arthur, Texas, facility. Prior to shipment, each batch was analyzed for VX and was required to be nondetect for agent with a minimum detection limit <20 ppb VX, to be nonignitable, and to contain <1 ppm EA-2192. The material was primarily caustic water with a very thin organic layer and probably some emulsified oil and water. It was sampled and analyzed directly from 4,600-gallon over-the-road shipping containers.

Veolia Environmental Services is a global environmental company with a permitted facility for burning hazardous waste. Shipments of VX hydrolysate to Veolia, which started in mid-2007, have been successful and were planned to continue through August 2008. Several public interest groups expressed significant opposition to these shipments and many of their concerns are described in Chapter 5.

Before deciding to ship the VX hydrolysate to Veolia, consideration was given to shipping it to the DuPont Secure Environmental Treatment (SET) facility at its Chambers Works, in Deepwater, New Jersey. Extensive studies were carried out by DuPont, the Environmental Protection Agency, and the Centers for Disease Control and Prevention. Based

Copyright © National Academy of Sciences. All rights reserved.

Review of Secondary Waste Disposal Planning for the Blue Grass and Pueblo Chemical Agent Destruction Pilot Plants
http://www.nap.edu/catalog/12210.html

on these studies, the DuPont SET facility was found to have acceptable treatment technology for VX hydrolysate from NECDF (DuPont, 2004; CDC, 2006). However, DuPont ultimately made a commercial decision not to handle this waste at the SET facility. At present, the VX hydrolysate that is expected to be produced at BGCAPP will be cleared for processing by the SCWO system at 99.9999 percent VX destruction (<160 ppb VX).[9,10]

Finding 6-7. It is expected that if offsite shipment to a TSDF becomes the preferred method for treating VX hydrolysate from BGCAPP, the operation of the agent neutralization reactors may have to be modified—namely, the residence time of the agent increased—to produce a stream that contains residual VX and EA2192 at concentrations less than the release criteria.

Before VX hydrolysate from the NECDF was shipped offsite, 7 million gallons of mustard agent HD hydrolysate from the ABCDF in Maryland were shipped in 1,300 tank truckloads to the DuPont SET facility without incident, where they were irreversibly treated according to a common practice used by industrial chemical operations faced with similar waste disposal needs for comparable waste streams. Thus, the bulk mustard agent stockpile that had been stored at the Edgewood Area of Aberdeen Proving Ground was destroyed by sending its hydrolysate offsite.

The mustard agent HD hydrolysate at ABCDF was the product of a hydrolysis procedure identical to that envisioned for PCAPP,[11] where only mustard agent hydrolysate that is similar to that produced at ABCDF will be produced (see Table 6-1). As previously stated, the hydrolysate from ABCDF was safely shipped to and treated in a commercial TSDF. Present plans call for the agent hydrolysate to be treated at PCAPP in immobilized cell bioreactors. This type of biological treatment is also available in the many sewage treatment works that could receive such a stream if they had sufficient capacity available and the hydrolysate met other characteristics stipulated by the particular works. Here again, the hydrolysate would have to meet the nondetect levels for agent before leaving the engineering controls of the PCAPP facility.

Hydrolysate from GB destruction has not been produced to date in operations beyond the laboratory scale, so no direct facility-scale comparison is possible. However, the GB hydrolysate from BGCAPP will, like VX hydrolysate, be primarily a caustic water solution with minor organic constituents. GB hydrolysate from BGCAPP should be amenable to shipment to and treatment by a TSDF that can manage treatment of VX hydrolysate, provided the GB hydrolysate has been properly characterized and evaluated.

Spent activated carbon was shipped offsite for treatment, recovery, and/or disposal from the ABCDF after closure. All wastes generated during closure of the ABCDF were disposed of at appropriate permitted facilities. The currently operating baseline incineration disposal facilities all ship selected wastes, including brine solutions, metal that has been tested to the established waste clearance level, and spent activated carbon, to permitted offsite facilities.

The knowledge generated from the experiences at formerly and currently operating chemical agent disposal facilities, as well as continued ongoing development of new technology in the analysis, sampling, and monitoring of secondary waste, has been used to develop improved methods for secondary waste handling and disposal. The offsite transportation, treatment, and disposal of agent-contaminated and noncontaminated secondary waste are currently being addressed under established programs and procedures that ensure the safety of the personnel handling the waste. Such development work and accumulated experience have a bearing on developing options for permit requirements applicable to the offsite shipment of agent hydrolysates from BGCAPP and PCAPP.

Finding 6-8. The experience to date with the offsite shipment and treatment of mustard and nerve agent hydrolysates from the Aberdeen and Newport Chemical Agent Disposal Facilities indicates that offsite transportation and disposal of these materials is a safe and technically viable course of action.

Recommendation 6-7. Because experience shows that offsite shipment and treatment of agent hydrolysates from BGCAPP and PCAPP is safe and technically viable, and in view of better analytical methods being developed, the PMACWA should consider this option now, before the plants are built and operating, to maximize the benefit from such a change. It is important to consider everything that would impact such a change.

Finding 6-9. Spent activated carbon and other closure wastes were successfully shipped offsite from the Aberdeen Chemical Agent Disposal Facility to an appropriate TSDF for ultimate disposal.

Recommendation 6-8. The shipment offsite to an appropriate permitted TSDF of all types of wastes, including spent activated carbon and closure wastes, should be examined and given serious consideration in light of past experience showing that it is a technically viable and safe method of disposing of these wastes.

[9]Sam Hariri, lead process engineer, BGCAPP, "Overview of MPT and SCWO process design," presentation to the committee, January 23, 2008.

[10]A destruction efficiency of 99.9999 percent is somewhat higher than the values given; however, these values are used to ensure that the variance range in the analyses results is taken into account.

[11]The toxicity of the product of mustard agent H hydrolysis at BGCAPP is not expected to differ significantly from that of mustard agent HD hydrolysate.

Copyright © National Academy of Sciences. All rights reserved.

References

BPBGT (Bechtel Parsons Blue Grass Team). 2004. Blue Grass Chemical Agent Destruction Pilot Plant (BGCAPP) Initial Design, Rev. 0, July. Aberdeen Proving Ground, Md.: Program Manager for Assembled Chemical Weapons Alternatives.

BPBGT. 2006a. Operations and Closure Agent-Contaminated Waste Disposal Estimate Summary Report, BGCAPP WP-045, Revision 0, December 28. Richmond, Ky.: Bechtel Parsons Blue Grass Team.

BPBGT. 2006b. Blue Grass Chemical Agent-Destruction Pilot Plant Resource Conservation and Recovery Act Research, Development and Demonstration Permit Application, Volume II, Revision 3, September. Available online at http://www.pmacwa.army.mil/ky/activities.htm. Last accessed January 30, 2008.

BPBGT. 2007. Blue Grass Chemical Agent-Destruction Pilot Plant Resource Conservation and Recovery Act Research, Development and Demonstration Permit Application, Volume I, Revision 4, June. Available online at http://www.pmacwa.army.mil/ky/activities.htm. Last accessed January 30, 2008.

BPT (Bechtel Pueblo Team). 2004. Initial Design for the Pueblo Chemical Agent Destruction Pilot Plant (PCAPP) Project, Rev. A—redacted for release to NRC, January 16. Aberdeen Proving Ground, Md.: Program Manager for Assembled Chemical Weapons Alternatives.

BPT. 2007. Final Report of Integrated Product Team (IPT) #10 on Secondary and Closure Waste Treatment, Including Supplemental Decontamination Units (SDUs) and Autoclaves, Rev. B, February 22. Aberdeen Proving Ground, Md.: Program Manager for Assembled Chemical Weapons Alternatives.

Bizzigotti, G.O., M.A. Berger, T.C. Cain, D.J. Cleaves, C. Gomolka, E.W. Hughitt, D.M. Ligon, P.K. McDonald, R.P. Rhoads, and A.R. Wusterbarth. 2006. Analysis of Off-Site Treatment of Hydrolysates from Chemical Agent Destruction Pilot Plants. Mitretek Report MTR 2006-22, October. Falls Church, Va.: Mitretek Systems.

Brickhouse, M.D., B. Williams, D. McGarvey, H.D. Durst, and R.J. O'Connor. 1998. Coupling reactions between dialkylcarbodiimides, phosphonates, and thiols. Pp. 617-623 in Proceedings of the ERDEC Scientific Conference on Chemical and Biological Defense Research. Report number ECBC-SP-004. Aberdeen Proving Ground, Md., Edgewood Chemical and Biological Center, U.S. Army Soldier and Biological Chemical Command.

CAC (Colorado Chemical Demilitarization Citizens' Advisory Commission). Undated. Recommendations from the Colorado Chemical Demilitarization Citizens' Advisory Commission to PMACWA Concerning Acceleration Options for the Destruction of Chemical Weapons Stored at the Pueblo Chemical Depot. Available online at http://www.cdphe.state.co.us/hm/pcd/cac/aowg/accelerationoptions.pdf. Last accessed March 13, 2008.

CDC (Centers for Disease Control and Prevention). 2006. Review of the Revised Plan for Off-site Treatment of Newport Chemical Agent Disposal Facility's Caustic VX Hydrolysate at DuPont Secure Environmental Treatment Facility in Deepwater, New Jersey—Corrected Version, July. Atlanta, Ga.: Centers for Disease Control and Prevention.

CDCAB (Chemical Destruction Community Advisory Board). Undated. Recommendations of the KY CDCAB to ACWA on Design Consideration # 34: Off-site Shipment of Agent and Energetic Hydrolysate. Richmond, Ky.: Chemical Destruction Community Advisory Board.

CDCAB. 2007. Recommendations for Treatment of Non-Contaminated Rocket Motors, October 8. Richmond, Ky.: Chemical Destruction Community Advisory Board.

CDCAB. 2008. Kentucky Chemical Destruction Community Advisory Board Recommendation on Operation Swift Solution, January 15. Richmond, Ky.: Chemical Destruction Community Advisory Board.

Chieftain (Pueblo Chieftain). 2008. Let's Roll—Editorial, February 9. Available online at http://www.chieftain.com/shared-content/search/index.php?search=go&d1=01-01-2008&d2=05-18-2008&q=editorials&o=100. Last accessed May 27, 2008.

Creasy, W.R., M.D. Brickhouse, K.M. Morrissey, J.R. Stuff, R.L. Cheicante, J. Ruth, J. Mays, B.R. Williams, R. O'Connor, and H.D. Durst. 1999. Analysis of chemical weapons decontamination waste from old ton containers from Johnston Atoll using multiple analytical methods. Environmental Science & Technology 33(13): 2157-2162.

Crow, J., A. Dooley, R. Vincent, M. Joyner, R. Zangerl, K. Flood, C. Williams, T. Lampkin, C. King, S. Brown, P. Conroy, G. Liptak, H. Burgess, M. Hudson, J. Capillo, E. Weyhrauch, L. Koplovitz, S. Fomichov, S. Hawkins, and C. Hinds. 1992. The International Citizens' Accord on Chemical Weapons Disposal, November. Berea, Ky.: Chemical Weapons Working Group.

Dejarme, L., and G.D. Lecakes. 2008. Bench-Scale Evaluation of VX Hydrolysis, TRRP #11, Test Report, Rev. 0. Aberdeen Proving Ground, Md.: Program Manager for Assembled Chemical Weapons Alternatives.

DuPont (E.I. duPont de Nemours and Company). 2004. DuPont Technical Assessment on U.S. Army Newport (Indiana) Project: Executive Summary, March 3. Wilmington, Del.: E.I. duPont de Nemours and Company.

EPA (U.S. Environmental Protection Agency). 2005. RCRA Hazardous Waste Identification Training Module, 40 CFR 261, September. Washington, D.C.: Environmental Protection Agency.

EPA. 2007. Test Methods for Evaluating Solid Waste, Physical/Chemical Methods, Revision 6, February 2007. Washington, D.C.: Environmental Protection Agency.

Copyright © National Academy of Sciences. All rights reserved.

Review of Secondary Waste Disposal Planning for the Blue Grass and Pueblo Chemical Agent Destruction Pilot Plants
http://www.nap.edu/catalog/12210.html

FOCIS (FOCIS Associates, Inc.). 2003. Analysis of Impacts of Off-Site Disposal Options for the Pueblo Chemical Agent Destruction Pilot Plant (PCAPP), July 25. Aberdeen Proving Ground, Md.: Program Manager for Assembled Chemical Weapons Alternatives.

Malloy IV, T.A., L. Dejarme, C. Fricker, J. Guinan, G.D. Lecakes, and A. Shaffer. 2007. Bench-Scale Evaluation of GB Hydrolysis, TRRP #02a Phase II, Test Report, Rev 0. Aberdeen Proving Ground, Md.: Program Manager for Assembled Chemical Weapons Alternatives.

NRC (National Research Council). 2001. Analysis of Engineering Design Studies for Demilitarization of Assembled Chemical Weapons at Pueblo Chemical Depot. Washington, D.C.: National Academy Press.

NRC. 2002a. Analysis of Engineering Design Studies for Demilitarization of Assembled Chemical Weapons at Blue Grass Army Depot. Washington, D.C.: The National Academies Press.

NRC. 2002b. Closure and Johnston Atoll Chemical Agent Disposal System. Washington, D.C.: National Academy Press.

NRC. 2005a. Interim Design Assessment for the Pueblo Chemical Agent Destruction Pilot Plant. Washington, D.C.: The National Academies Press.

NRC. 2005b. Interim Design Assessment for the Blue Grass Chemical Agent Destruction Pilot Plant. Washington, D.C.: The National Academies Press.

NRC. 2007. Review of Chemical Agent Secondary Waste Disposal and Regulatory Requirements. Washington, D.C.: The National Academies Press.

NRC. 2008. Review and Assessment of Developmental Issues Concerning Metal Parts Treater Design for the Blue Grass Chemical Agent Destruction Pilot Plant. Washington, D.C.: The National Academies Press.

PMACWA (Program Manager for Assembled Chemical Weapons Alternatives). 2003. Transportation Risk Assessment: Options for the Offsite Shipment and Disposal of Residual Wastes from the Destruction of Chemical Weapons at the Pueblo Chemical Depot, April.

PMACWA. 2006. Resource Conservation and Recovery Act Research, Development, and Demonstration Stage III, Class 3 Permit Modification Request for: The Department of the Army Assembled Chemical Weapons Alternatives Pueblo Chemical Agent Destruction Pilot Plant, Revision 0. Available online at http://www.cdphe.state.co.us/hm/pcd/rdd/phase3mod/061130sec1.pdf. Last accessed May 8, 2008. Aberdeen Proving Ground, Md.: Program Manager for Assembled Chemical Weapons Alternatives.

PMACWA. 2007a. Chemical Destruction Community Advisory Board – December 2007. Available online at http://www.pmacwa.army.mil/ky/ip/dl/acwa_cdcab_mailing_roster.pdf. Last accessed June 3, 2008.

PMACWA. 2007b. Kentucky Chemical Demilitarization Citizens' Advisory Commission Members 2007. Available online at http://www.pmacwa.army.mil/ky/ip/dl/acwa_cac_roster.pdf. Last accessed June 3, 2008.

PMACWA. 2008a. Fact Sheet: Planning for Treatment or Disposal of Secondary Wastes (Blue Grass), January 22. Richmond, Ky.: Blue Grass Chemical Stockpile Outreach Office.

PMACWA. 2008b. Fact Sheet: Planning for Treatment or Disposal of Secondary Wastes (Pueblo), January 22. Pueblo, Colo.: Pueblo Chemical Depot Outreach Office.

PMACWA. 2008c. Pueblo Chemical Agent Destruction Pilot Plant Public Outreach and Involvement Strategy, 2008, Draft. Pueblo, Colo.: Pueblo Chemical Depot Outreach Office.

Shannon, R. 2008. Seeking a swift solution: Nerve agent leak topic of community discussion. Available online at http://www.richmondregister.com/archivesearch/local_story_016080716.html. Last accessed May 16, 2008.

U.S. Army. 2002. Record of Decision, Chemical Stockpile Disposal Project, Destruction of the Chemical Agents and Munitions Stored at Pueblo Chemical Depot, Colorado, July 18. Available online at http://www.pmacwa.army.mil/co/ip/dl/acwa_pueblo_rod.pdf. Last accessed May 8, 2008.

U.S. Army. 2004. Implementation Guidance Policy for Revised Airborne Exposure Limits for GB, GA, GD, GF, VX, H, HD, and HT, June 18. Washington, D.C: Office of the Assistant Secretary of the Army for Installations and Environment.

Usinowicz, P.J., E.C. Burckle, B.K. Fahey, J.A. Ford, G.D. Lecakes, and R.K. Smith. 2005. Bench-Scale Evaluation of H and HD Hydrolysis Rev. 0, Final Report. BGCAPP TRRP #02b. Aberdeen Proving Ground, Md.: U.S. Army Chemical Materials Agency.

Vincent, R. 2005. Design Options Working Group Report to the Colorado Citizens' Advisory Commission, June 29. Available online at http://www.cdphe.state.co.us/hm/pcd/cac/pcdcacrecstodod.pdf. Last accessed May 27, 2008.

Yang, Y.-C., L.L. Szafraniec, W.T. Beaudry, and D.K. Rohrbaugh. 1997. Characterization of HD heels and the degradation of HD in ton containers. Pp. 353-360 in Proceedings of the 1996 Scientific Conference on Chemical and Biological Defense Research. Aberdeen Proving Ground, Md.: Edgewood Research and Development Engineering Center.

Yang, Y.-C., L.L. Szafraniec, W.T. Beaudry, and J.R. Ward. 1988. Kinetics and mechanism of the hydrolysis of 2-chloroethyl sulfides. Journal of Organic Chemistry 53(14): 3293-3297.

Yang, Y.-C. 1999. Chemical detoxification of nerve agent VX. Accounts of Chemical Research 32(2): 109-115.

Copyright © National Academy of Sciences. All rights reserved.

Appendixes

Copyright © National Academy of Sciences. All rights reserved.

Copyright © National Academy of Sciences. All rights reserved.

Appendix A

National Research Council Reports on the Assembled Chemical Weapons Assessment/Alternatives Program

Review and Evaluation of Alternative Technologies for Demilitarization of Assembled Chemical Weapons (1999)

Evaluation of Demonstration Test Results of Alternative Technologies for Demilitarization of Assembled Chemical Weapons: A Supplemental Review (2000)

Analysis of Engineering Design Studies for Demilitarization of Assembled Chemical Weapons at Pueblo Chemical Depot (2001)

Evaluation of Demonstration Test Results of Alternative Technologies for Demilitarization of Assembled Chemical Weapons: A Supplemental Review for Demonstration II (2001)

Analysis of Engineering Design Studies for Demilitarization of Assembled Chemical Weapons at Blue Grass Army Depot (2002)

Update on the Engineering Design Studies Evaluated in the NRC Report, Analysis of Engineering Design Studies for Demilitarization of Assembled Chemical Weapons at Blue Grass Army Depot (Letter Report) (2002)

Update on the Engineering Design Studies Evaluated in the NRC Report Analysis of Engineering Design Studies for Demilitarization of Assembled Chemical Weapons at Pueblo Chemical Depot (Letter Report) (2002)

Interim Design Assessment for the Blue Grass Chemical Agent Destruction Pilot Plant (2005)

Interim Design Assessment for the Pueblo Chemical Agent Destruction Pilot Plant (2005)

Review and Assessment of Program Options for Chemical Agent Destruction Pilot Plants at Blue Grass (Letter Report) (2005)

Review and Assessment of Proposals for Chemical Agent Destruction Pilot Plant at Pueblo, Colorado (Letter Report) (2005)

Letter Report of Review and Assessment of the Proposals for Design and Operation of Designated Chemical Agent Destruction Pilot Plants (DCAPP-Blue Grass) (Letter Report) (2006)

Review and Assessment of the Proposals for Design and Operation of Designated Chemical Agent Destruction Pilot Plants (DCAPP-Blue Grass II) (Letter Report) (2006)

Review and Assessment of the Proposals for Design and Operation of Designated Chemical Agent Destruction Pilot Plants (DCAPP-Pueblo) (Letter Report) (2006)

Review and Assessment of Developmental Issues Concerning Metal Parts Treater Design for the Blue Grass Chemical Agent Destruction Pilot Plant (2008)

Copyright © National Academy of Sciences. All rights reserved.

Appendix B

Definition of "Generator Knowledge"

"Generator knowledge" is a hazardous waste evaluation method commonly accepted and defined by the U.S. Environmental Protection Agency and individual states based on some or all of the following information:

1. Facility process flow diagram or narrative description of the process generating the waste (should be used in most cases).
2. Chemical makeup of all ingredients or materials used in the process that generates the waste (should be used in most cases).
3. List of constituents that are known or believed to be by-products or side reactions to the process that produces the waste.
4. Material Safety Data Sheets and/or product labels for substances used in the process that generates the waste.
5. Data obtained from approved methods of sampling and laboratory analysis of waste generated from the same process using the same ingredients/materials.
6. Data obtained from literature regarding waste produced from a similar process using the same ingredients/materials.
7. Documentation of product specifications or input materials and output products.

REFERENCE

EPA (U.S. Environmental Protection Agency). 2005. RCRA Hazardous Waste Identification Training Module, 40 CFR 261, September. Washington, D.C.: Environmental Protection Agency.

Copyright © National Academy of Sciences. All rights reserved.

Appendix C

Physical Properties of Chemical Agents in Munitions Stored at Blue Grass Army Depot and Pueblo Chemical Depot

Munitions containing the nerve agents GB and VX are stored at the Blue Grass Army Depot as are munitions containing mustard agent H. Munitions containing mustard agent HD or HT are stored at Pueblo Chemical Depot. Values for a number of physical properties of these agents are given in Tables C-1 and C-2.

TABLE C-1 Physical Properties of Nerve Agents

Agent Characteristic	GB	VX
Chemical formula	$C_4H_{10}FO_2P$	$C_{11}H_{26}NO_2PS$
Molecular weight	140.10	267.38
Boiling point (°C)	150 (extrapolated)	292 (extrapolated)
Freezing point (°C)	–56	≤51
Vapor pressure at 25°C (mm Hg)	2.48	0.000878
Volatility at 25°C (mg/m^3)	18,700	12.6
Surface tension at 20°C (dynes/cm)	26.5	32.0
Kinematic viscosity (cSt)	1.28 at 25°C	12.26 at 20°C
Liquid density at 25°C (g/cm^3)	1.0887	1.0083
Solubility (g/100 g of distilled water)	100; soluble in organic solvents	5 at 25°C; best solvents are dilute mineral acids
Heat of vaporization (cal/g)	82.9	71.8
Heat of combustion (cal/g)	5,600	8,300

SOURCE: NRC, 2005; Abercrombie, 2003.

Copyright © National Academy of Sciences. All rights reserved.

Review of Secondary Waste Disposal Planning for the Blue Grass and Pueblo Chemical Agent Destruction Pilot Plants
http://www.nap.edu/catalog/12210.html

TABLE C-2 Physical Properties of Mustard Agents[a]

Agent Characteristic	HD	HT[b]
Chemical name	Bis (2-chloroethyl) sulfide or 2,2'-dichlorodiethyl sulfide	Same as HD with 20 to 40 wt% agent T, bis[2-(2-chlorethylthio) ethyl] ether
Chemical formula	$C_4H_8Cl_2S$	Not applicable
Molecular weight	159.07	188.96 (based on 60/40 wt%)
Vapor density (relative to air)	5.5 (calculated)	6.5 (calculated based on 60/40 wt%)
Boiling point (°C)	218 (extrapolated)	No constant boiling point
Decomposition temperature (°C)	180	165 to 180
Freezing point (°C)	14.45	1.3 (measured as melting point)
Vapor pressure at 25°C (mm Hg)	0.106	7.7×10^{-2} (calculated based on Raoult's law equation)
Volatility at 25°C (mg/m^3)	9.06×10^2 (calculated from vapor pressure)	7.83×10^2 (calculated from vapor pressure)
Diffusion coefficient for vapor in air (cm^2/sec)	0.060 at 20°C (68°F)	0.05 at 25°C (77°F)
Flash point (°C)	105	Flash point range 109 to 115
Surface tension (dynes/cm)	43.2 at 20°C (68°F)	44 at 25°C (77°F)
Viscosity at 20°C (cSt)	3.52	6.05
Liquid density at 25°C (g/cm^3)	1.2685	1.263
Solubility (g/100 g of distilled water)	0.092 at 22°C (72°F); soluble in acetone, carbon tetrachloride, chloroform, tetrachloroethane, ethyl benzoate, ether	Slightly soluble in water; soluble in most organic solvents
Heat of vaporization		Not available
(Btu/lb)	190	
(J/g)	82	
Heat of combustion		Not available
(Btu/lb)	8,100	
(J/g)	3,482	

[a]Mustard agents are labeled H, HD, and HT. The active ingredient in all these blister agents is bis(2-chloroethyl) sulfide, or $(ClCH_2CH_2)_2S$. HD, called the distilled mustard, is nominally pure mustard agent. H, often called Levinstein mustard, was approximately 70% pure mustard agent and 30% impurities at the time of manufacture. However, the stored H mustard agent has deteriorated over time and its physical properties are highly variable. H is the only form of mustard agent stored at Blue Grass Army Depot.

[b]Overall proportional composition of the mixture. HT is prepared by a chemical process that synthesizes the HT directly in such a way that it contains both the HD and T constituents without further formulation.

SOURCES: Adapted from U.S. Army, 1988; Abercrombie, 2003; BPT, 2004.

REFERENCES

Abercrombie, P.L. 2003. Physical Property Data Review of Selected Chemical Agents and Related Compounds: Updated Field Manual 3-9 (FM 3-9), ECBC-TR-294, September. Edgewood, Md.: U.S. Army Edgewood Chemical Biological Center.

BPT (Bechtel Pueblo Team). 2004. Initial Design for the Pueblo Chemical Agent Destruction Pilot Plant (PCAPP) Project, Rev. A—redacted for release to NRC, January 16. Aberdeen Proving Ground, Md.: Program Manager, Assembled Chemical Weapons Alternatives.

NRC. 2005. Interim Design Assessment for the Blue Grass Chemical Agent Destruction Pilot Plant. Washington, D.C.: The National Academies Press.

U.S. Army. 1988. Chemical Stockpile Disposal Program Final Programmatic Environmental Impact Statement. Aberdeen Proving Ground, Md.: U.S. Army Chemical Materials Agency.

Copyright © National Academy of Sciences. All rights reserved.

Appendix D

Results from Technical Risk Reduction Program Activity 2a, Phase II, for GB and Activity 11 for VX

TRRP 2a, PHASE II, FOR GB ANALYSIS

The performance of the new analytical method was adequate to ensure that measured GB concentrations in the hydrolysate were low enough for secondary treatment using supercritical water oxidation (SCWO). Method detection limit (MDL) values in hydrolysate were 2.2 µg/L (2.2 ppb) with 68 percent recovery and were calculated in accordance with standard U.S. Environmental Protection Agency (EPA) methods (40 CFR Part 136, Appendix B). This value is well below the release criteria of 75 ppb for GB in the hydrolysate. A more significant performance parameter is the target action limit (TAL), which is the concentration for which 95 percent of the measurements will be below the release criteria (Malloy et al., 2007). In an analysis of GB performed on hydrolysate generated from two batch reactor studies conducted at Battelle, the TAL values were calculated at 57 ppb and 52 ppb.

The study also showed that the destruction method was effective for destruction of GB in a number of other matrices, including the diisopropylurea crystals that form from the diisopropyl carbodiimide during storage.

A series of batch reactor studies were conducted to validate the Blue Grass Chemical Agent Destruction Pilot Plant (BGCAPP) GB neutralization process (Malloy et al., 2007). Three different GB batches were used that had concentrations ranging from 75 percent to 90 percent, and diisopropylmethyl phosphonate and the stabilizer compounds made up the remainder of the material. The batch tests used 6 percent sodium hydroxide; the pH at the end of the batch runs was ~12.

At the conclusion of the hydrolysis experiments, an organic layer was present. The composition of this layer (present in some hydrolysates) was analyzed not by Battelle but by the Army's Edgewood Chemical and Biological Center, which reported that the layer was largely tributylamine and some additional compounds that are manufacturing impurities in the tributylamine that was used by the Army to stabilize the GB. In all cases, the aqueous phase constituted >98 percent of the total hydrolysate volume, and the percentage constituted by the organic phase was very small. Methylene chloride extraction of the hydrolysates followed by gas chromatography and mass spectrometry (GC/MS) showed tributylamine, diisopropylmethyl phosphonate, dibutyl acetamide, and—in the case of the diisopropyl carbodiimide stabilized material—diisopropylurea and diisopropylnitrosamine. Residual GB was not mentioned.

Method application tests of hydrolysate produced on the bench showed that in 9 of 10 batches, GB destruction exceeded 99.9999 percent with greater than 95 percent confidence. In one batch, residual GB was detected at concentrations ranging from 61 to 74 ppb. This showed that the method was effective for analyzing the hydrolysate.

An issue of significant concern was whether GB could be analyzed in the solids that are found in the munitions. Crystals that tend to form in the munitions have been shown to be diisopropylurea, which is derived from diisopropyl carbodiimide (Rosso et al., 2005). The TRRP study showed that the analytical method worked well for detecting GB in the diisopropylurea crystals, and that GB associated with the diisopropylurea crystals was hydrolyzed (Malloy et al., 2007). For diisopropyl urea crystals that had been washed with caustic, residual GB was detected at high concentrations, on the order of 70 to 450 ppm. When the diisopropylurea crystals were mixed with GB/diisopropyl carbodiimide and then added to the reactor, no GB was detected.

The analytical method also worked well for measuring GB in the energetics neutralization hydrolysate. BGCAPP-104B had an MDL of 13 ppb, based on an analysis of spiked enegetics hydrolysates from the neutralization reactor.

The TRRP study also showed that GB could be reformed in the SCWO feed, but only when pH was lowered to acidic values. At longer reaction times, however, the GB concentration begins decreasing again. This is explained in terms of GB re-formation upon acidification, followed by acidic hydrolysis. GB re-formation without pH adjustment

Copyright © National Academy of Sciences. All rights reserved.

Review of Secondary Waste Disposal Planning for the Blue Grass and Pueblo Chemical Agent Destruction Pilot Plants
http://www.nap.edu/catalog/12210.html

was evaluated by analysis of hydrolysate from one of the method application tests 1 month after the hydrolysis was performed. One of the reanalyses measured GB at 5.7 ppb, which suggested that slow re-formation might be taking place.

The TRRP also evaluated the performance of the GB analytical method for measuring agent in SCWO and reverse osmosis (RO) effluents. Analysis of GB in simulated SCWO effluent using method BGCAPP-104b reproducibly measured GB at concentrations below 5 ppb, with a calculated MDL of 0.63 ppb. Similar results were achieved for the RO rejectate. These values are well below the target value of 20 ppb. When blended hydrolysate was evaluated, an MDL of 1.7 ppb was measured.

RESULTS FROM TRRP 11 FOR VX ANALYSIS

A TRRP was conducted to evaluate the analytical methods for measuring VX in the matrices anticipated at BGCAPP and the effectiveness of agent destruction. A precision and accuracy (P&A) study of the refined method (referred to as BGCAPP-204) was performed by conducting triplicate analyses on a hydrolysate spiked at four different levels. The P&A study produced a detection limit of 4 μg/L (ppb) and a limit of quantification (LOQ) of 10 ppb for VX. The TAL, which accounts for the method imprecision, was measured at 107 ppb, a value that is well below the 160 ppb acceptance criteria of the SCWO. When the method was applied to hydrolysates from the three different VX batches, detection limits were similarly low, ranging from 9 to 28 μg/L. A modified 12-sample P&A study of hydrolysates from four different sources of VX showed an average detection limit of 4 ppb, an LOQ of 8 ppb, and a TAL of 125 ppb. When the P&A study was extended to 48 samples over 4 days, the mean MDL was 16 ppb, the LOQ was 35 ppb, and the TAL was 107 ppb. A final test of analytical efficacy involved analysis of simulated agent neutralization reactor (ANR) hydrolysate spiked with 80 ppb VX. In this study, VX was detected with good P&A in hydrolysate samples derived from two separate VX batches. These studies indicated that the instrumental method used for clearing the VX hydrolysate for further SCWO treatment is adequate.

For instrumental analysis of EA2192, a liquid chromatography method was developed that utilized either a diode array detector or an ultraviolet detector. Initial studies were conducted using liquid chromatography/electrospray ionization/MS/MS, with the objective of confirming peak identification, which cannot be done with confidence using an ultraviolet detector alone. Once the peaks were identified in the liquid chromatogram, studies were conducted to evaluate the performance of the diode array detector method (BGCAPP-304B), which produced detection limits averaging 61 ppm. When the ultraviolet light detector was used, detection limits were calculated that ranged from 18 to 106 ppm. These levels are much lower than the clearance level of 1 g/L (1,000 ppm), which must be demonstrated for transfer of the hydrolysate from the ANR to the SCWO. However, the method is temperamental in that the baseline detector response is substantial and varying, retention times vary, peak shapes are variable, and the detector is nonspecific. Nevertheless, analysis of simulated ANR hydrolysate spiked with 400 ppb EA2192 resulted in detection with good P&A in analysis of hydrolysate derived from two VX batches.

Re-formation of VX in the hydrolysate was a concern based on reactions of hydrolysis products catalyzed by stabilizers (Brickhouse et al., 1998). This is considered more likely to occur as the pH decreases from the high values (>12) found in the unmodified hydrolysate. As in previous cases, analysis was complicated by analytical difficulties stemming from the tendency of VX to protonate at pH < 12, which results in inefficient extraction. Therefore, BGCAPP-204 was modified by raising the pH of the extract above 7 to drive the VX into the organic phase. Using this analytical approach, no VX was detected in the hydrolysate for up to 60 days. However, because the recoveries were low, the possibility of re-formation in an acidified hydrolysate could not be completely discounted. Reanalysis using a liquid chromatography method also failed to detect VX in the hydrolysate. However, the TRRP report (Dejarme and Lecakes, 2008) stated that the study did not adequately represent process conditions planned for BGCAPP, and the authors recommended that a more detailed re-formation study be performed.

Residual VX and EA2192 were also evaluated in the SCWO effluent and in the RO rejectate. To make the measurements, the analytical method for VX needed to be modified, because the effluents were slightly acidic, which impedes extraction of VX. These modifications were effective, resulting in VX MDL values of 14 and 12 ppb for the SCWO and RO effluents, respectively. For EA2192, MDL values of 290 and 470 ppb were achieved for the SCWO and RO effluents. The SCWO VX method is called BGCAPP-604, and the method modified for EA2192 is BGCAPP-704B.

Members of the public expressed concern about the different chemistries of the two layers that emerge in VX hydrolysate. Specifically, there is uncertainty over whether VX could be present in the organic layer. In examining the hydrolysates from the four batches of VX, one of the four had a layer that appeared to account for several percent of the total volume, while each of the other three had an organic layer that accounted for a much lower fraction. In TRRP activity 11, GC/MS analysis of the upper organic layer showed that it consists mainly of the disulfide, bis[2-(diisopropylamino)ethyl] disulfide, with lesser amounts of the thiolamine and related thiols, sulfides, and conjugates of those molecules with the stabilizer diisopropyl carbodiimide. VX was not detected in this analysis; however, the MDL for this approach is not known.

The TRRP activity 11 report (Dejarme and Lecakes, 2008) concluded with remarks that while the BGCAPP VX clearing method was working, it should be tested to evaluate

Copyright © National Academy of Sciences. All rights reserved.

Review of Secondary Waste Disposal Planning for the Blue Grass and Pueblo Chemical Agent Destruction Pilot Plants
http://www.nap.edu/catalog/12210.html

its robustness in an actual plant neutralization environment. Furthermore, extensive testing to characterize the potential for VX re-formation was beyond the scope of TRRP activity 11.

REFERENCES

Brickhouse, M.D., B. Williams, D. McGarvey, H.D. Durst, and R.J. O'Connor. 1998. Coupling reactions between dialkylcarbodiimides, phosphonates, and thiols. Pp. 617-623 in Proceedings of the ERDEC Scientific Conference on Chemical and Biological Defense Research. Report number ECBC-SP-004. Aberdeen Proving Ground, Md.: Edgewood Chemical and Biological Center, U.S. Army Soldier and Biological Chemical Command.

Dejarme, L., and G.D. Lecakes. 2008. Bench-Scale Evaluation of VX Hydrolysis, TRRP #11, Test Report, Rev. 0. Aberdeen Proving Ground, Md.: Program Manager for Assembled Chemical Weapons Alternatives.

Malloy IV, T.A., L. Dejarme, C. Fricker, J. Guinan, G.D. Lecakes, and A. Shaffer. 2007. Bench-Scale Evaluation of GB Hydrolysis, TRRP #02a Phase II, Test Report, Rev. 0. Aberdeen Proving Ground, Md.: Program Manager for Assembled Chemical Weapons Alternatives.

Rosso, T.E., P.L. Abercrombie, A.B. Butrow, G. Hondrogiannis, J.M. Lochner, J.J. Loss, R.J. Malecki, J.M. Meuser, D.K. Rohrbaugh, and Y.-C. Yang. 2005. Characterization of Solid and Liquid GB Samples Collected from M55 Rockets Processed at Anniston Chemical Agent Disposal Facility (ANCDF). Aberdeen Proving Ground, Md.: Edgewood Chemical and Biological Center.

Copyright © National Academy of Sciences. All rights reserved.

Appendix E

Committee Meetings and Site Visits

MEETINGS

First Committee Meeting, January 23-25, 2008, Richmond, Kentucky

Objective: Receive briefings from the Assembled Chemical Weapons Alternatives (ACWA) staff and contractor representatives concerning plans for the Blue Grass Chemical Agent Destruction Pilot Plant (BGCAPP) design and secondary wastes; discuss and arrive at initial approach to task; meet with public stakeholders; expand report outline and identify further information needed.

ACWA Overview Briefing, Joseph Novad, Technical Director, ACWA.

Process Design Overview Blue Grass Chemical Agent Destruction Pilot Plant (BGCAPP), Sam Hariri, Lead Process Engineer, BGCAPP.

Secondary Waste Streams, Roger Dickerman, Systemization Manager, BGCAPP.

Overview of MPT and SCWO Process Design, Sam Hariri, Lead Process Engineer, BGCAPP.

BGCAPP Throughput and Availability Analysis (TAA), Sam Hariri, Lead Process Engineer, BGCAPP.

Process Alternates for Waste, Kevin Regan, Environmental Manager, BGCAPP.

Current Waste Analysis and Certification, John Barton, Chief Scientist, BGCAPP, and Kevin Regan, Environmental Manager, BGCAPP.

Current Stakeholder Involvement, John Barton, Chief Scientist, BGCAPP, and Kevin Regan, Environmental Manager, BGCAPP.

Public Meeting Participants: In addition to the committee and National Research Council (NRC) staff, the following people attended the public meetings: January 23: Jean Hibberd and Robert Miller, Chemical Destruction Community Advisory Board (CDCAB); January 24: Bill Buchanan, Kentucky Department of Environmental Protection (KDEP); Elizabeth Crowe, Kentucky Environmental Foundation; Robert Miller, Kentucky Chemical Demilitarization Citizens' Advisory Commission and CDCAB; Craig Williams, Kentucky Chemical Demilitarization Citizens' Advisory Commission, CDCAB, and Director, Chemical Weapons Working Group.

Second Committee Meeting, February 12-14, 2008, Pueblo and Denver, Colorado

Objective: Receive briefings and attend selected sessions of in-process review meeting of the ACWA staff and contractor representatives concerning plans for the Pueblo Chemical Agent Destruction Pilot Plant (PCAPP) design and secondary wastes; meet with public stakeholders; review initial drafts of report chapters and discuss additional information to be sought.

PCAPP Secondary Waste Discussion, Craig Myler, Chief Engineer for Process and Technology, Bechtel National, Inc.

3D Model Review and Design Status, Mark Myatt, Bechtel Project Team Project Engineering Manager, Bechtel National, Inc., and Robert Schanke, Design Liaison, U.S. Army Corps of Engineers.

Public Meeting Participants: In addition to the committee and NRC staff, the following people attended the public meeting on February 12: Velma L. Campbell, citizen and public health specialist; Terry Hart, Pueblo Chemical Depot Citizens' Advisory Commission; Bob Kennemer, Pueblo Outreach Office; John Klomp, citizen; Joseph Marquart, citi-

Copyright © National Academy of Sciences. All rights reserved.

Review of Secondary Waste Disposal Planning for the Blue Grass and Pueblo Chemical Agent Destruction Pilot Plants
http://www.nap.edu/catalog/12210.html

zen; John Norton, reporter, *Pueblo Chieftain*; John Schlatter, Bechtel National, Inc.

Third Committee Meeting, April 1-2, 2008, Washington, D.C.

Objective: Develop text and refine the report. Only committee members and staff were in attendance.

SITE VISITS

Frankfort, Kentucky, January 24, 2008

Objective: Meet with staff of KDEP concerning regulatory status for BGCAPP.

Individuals Met with: April Webb, Branch Manager; John Jump, Permit Review Section Supervisor; Bill Buchanan, Leasue Meyers, and Shannon Powers, Hazardous Waste Branch, KDEP.

NRC Participants: Peter Lederman, Committee Chair; William Rhyne, Committee Member; Bruce Braun, Director, NRC Board on Army Science and Technology; and James Myska, NRC Senior Research Associate.

Denver, Colorado, February 14, 2008

Objective: Meet with staff of Colorado Department of Public Health and Environment (CDPHE) concerning regulatory status for the PCAPP.

Individuals Met with: Douglas Knappe, Manager; Jeannine Natterman, Lisa Woodward, Clayton Trumpolt, James Hindman, and Kevin Mackey, Hazardous Materials and Waste Management Division, CDPHE.

NRC Participants: Otis Shelton, Rebecca Haffenden, William Rhyne, Committee Members; James Myska, NRC Senior Research Associate.

Copyright © National Academy of Sciences. All rights reserved.

Appendix F

Biographical Sketches of Committee Members

Peter B. Lederman, *Chair*, recently retired as executive director, Hazardous Substance Management Research Center, and executive director, Office of Intellectual Property, New Jersey Institute of Technology. He continues to teach environmental management, policy, and site remediation. He is active as a consultant and is the principal of Peter Lederman & Associates. He has a Ph.D. in chemical engineering from the University of Michigan. Dr. Lederman has over 50 years of broad experience in all facets of environmental management, control, and policy development; considerable experience in hazardous substance treatment and management as well as process design and development in the petrochemical industry; and over 18 years of experience as an educator. He has industrial experience as a process designer and managed the development of new processes through full-scale plant demonstrations. He is well known for his work as a professor in chemical process design. He led his company's safety program in the early 1980s. Dr. Lederman is a registered professional engineer, registered professional planner, certified hazardous material manager, and a diplomate in environmental engineering. He has also worked at the federal (EPA) and state levels with particular emphasis on environmental policy. He is a national associate of the National Academies.

Otis A. Shelton, *Vice Chair*, is associate director for safety and environmental services compliance and operational assessments for Praxair, Inc., a position he has held since 1992. In this position, Mr. Shelton is responsible for managing Praxair's assessment program, which focuses on environmental, operational safety, personnel safety, industrial hygiene, emergency planning, distribution, and medical gases programs. Previously, Mr. Shelton managed Union Carbide Corporation's regional corporate health, safety, and environmental protection audit program. This program reviewed UCC's health, safety, and environmental compliance in all UCC's operations, worldwide. He holds an M.S. in chemical engineering from the University of Houston. He is a fellow of and has served on the board of directors of the American Institute of Chemical Engineers and is a member of the National Society of Black Engineers' National Advisory Board. He was recently elected as secretary of the American Institute of Chemical Engineers.

Charles Barton is currently a senior scientist at Xoma (U.S.) LLC, Berkeley, California. In this capacity he oversees preclinical and clinical studies to determine toxicity/safety of therapeutic monoclonal antibodies. Dr. Barton was previously the Iowa state toxicologist at the Iowa Department of Public Health. He received his Ph.D. in toxicology from the University of Louisiana. In addition to being a certified toxicologist, he is certified in conducting public health assessments, health education activities, and risk assessments; in emergency response to terrorism and emergency response incident command; and in hazardous waste operations and emergency response. In his position as the state toxicologist, Dr. Barton served as the statewide public health resource, providing health consultations and advice to other environment- and health-related agencies, to health-care providers, and to business and industry representatives.

Gary S. Groenewold is a staff scientist who has conducted research in surface chemistry, gas-phase chemistry, and secondary ion mass spectrometry at the Idaho National Laboratory (INL) since 1991. His research has focused on determining the speciation of absorbed radioactive and toxic metals (U, Np, Pu, Am, Hg, Al, and Cu) and organic compounds (e.g., VX, G agents, HD, organophosphates, amines, and sulfides). Before that, Dr. Groenewold served 3 years in line management at the INL and as the technical leader of an environmental organic analysis group. Before joining the INL, Dr. Groenewold worked in anticancer drug discovery for Bristol-Myers, using mass spectrometry as an identification tool. He received his Ph.D. in chemistry at the University of Nebraska, where he studied ion-molecule condensation and elimination reactions in the gas phase. He has authored 85 scientific publications on these subjects.

Copyright © National Academy of Sciences. All rights reserved.

Review of Secondary Waste Disposal Planning for the Blue Grass and Pueblo Chemical Agent Destruction Pilot Plants
http://www.nap.edu/catalog/12210.html

Rebecca A. Haffenden is an attorney and currently a technical staff member of the Los Alamos National Laboratory. Prior to joining Los Alamos, she served as a program attorney with the Argonne National Laboratory. Her recent professional work has included serving as project manager for the Air Force Material Command (AFMC) Headquarters Environmental Compliance Assessment and Management Program (ECAMP); evaluating legislation and regulations associated with security vulnerabilities for the U.S. Department of Homeland Security; and providing legal expertise to programs involving federal facility site remediation and hazardous waste compliance and corrective actions (RCRA). She also coauthored a working paper on the application of federal and state hazardous waste regulatory programs to waste chemical agents, in addition to being a coauthor of the Environmental Impact Statement for the Assembled Chemical Weapons Alternatives program. Ms. Haffenden received a B.A. in psychology from the University of Illinois and a J.D. from Suffolk Law School, Boston, Massachusetts.

William R. Rhyne is a retired risk and safety analysis consultant to the nuclear, chemical, and transportation industries. He has over 30 years' experience associated with nuclear and chemical processing facilities and with the transportation of hazardous materials. From 1984 to 1987, he was the project manager and principal investigator for a probabilistic analysis of transporting obsolete chemical munitions. From 1997 to 2002, he was a member of the NRC Committee for the Review and Evaluation of Alternative Technologies for Demilitarization of Assembled Chemical Weapons I and II. Dr. Rhyne has authored or coauthored numerous publications in the nuclear and chemical safety and risk analysis areas and is the author of the book *Hazardous Materials Transportation Risk Analysis: Quantitative Approaches for Truck and Train.* He is a current member of the NRC Transportation Research Board Hazardous Materials Committee and a former member of the Society for Risk Analysis, the American Nuclear Society, and the American Institute of Chemical Engineers. He received a B.S. in nuclear engineering from the University of Tennessee and M.S. and D.Sc. degrees in nuclear engineering from the University of Virginia.

Leonard M. Siegel is director of the Mountain View, California-based Center for Public Environmental Oversight (CPEO), a project of the Pacific Studies Center that facilitates public participation in the oversight of military environmental programs, federal facilities cleanup, and brownfield revitalization. He is one of the environmental movement's leading experts on military facility contamination, community oversight of cleanup, and the vapor intrusion pathway. For his organization he runs three Internet newsgroups: the military environmental forum, the brownfields Internet forum, and the installation reuse forum. Mr. Siegel also serves on numerous advisory committees and is currently co-chair of California's Brownfields Revitalization Advisory Group. He is a member of the Interstate Technology and Regulatory Council's work team on perchlorate, the Department of Toxic Substances Control (California) External Advisory Group, and the Moffett Field (formerly Moffett Naval Air Station) Restoration Advisory Board.

Walter J. Weber, Jr. (NAE) has been the Gordon M. Fair and Earnest Boyce Distinguished University Professor of Environmental Engineering at the University of Michigan since 1994. He is also founding director of *ConsEnSus*, the College of Engineering's academic program *Con*centration*s* in *En*vironmental *Sus*tainability (2001 to present); founding director, The Great Lakes and Mid-Atlantic Center for Hazardous Substance Research (1988-2002); founding director, Institute for Environmental Sciences, Engineering and Technology (1997-2001); and founding director, National Center for Integrated Bioremediation Research and Development (1993-1999). Dr. Weber has been recognized by the International Science Index as one of the most highly cited and quoted scientists in the world. He has served on the National Academies Engineering Review Panel as well as its Board on Environmental Studies and Toxicology. He received an Sc.B. in chemical engineering from Brown University, an M.S.E. in civil engineering from Rutgers University, and a Ph.D. in water resources engineering from Harvard University. He was elected to the National Academy of Engineering in 1985.

Copyright © National Academy of Sciences. All rights reserved.

Copyright © National Academy of Sciences. All rights reserved.