Assessment of Explosive Destruction Technologies for Specific Munitions at the Blue Grass and Pueblo Chemical Agent Destruction Pilot Plants

Committee to Review Assembled Chemical Weapons Alternatives Program Detonation Technologies; National Research Council

ISBN: 0-309-12684-3, 200 pages, 8 1/2 x 11, (2009)

This free PDF was downloaded from:

http://www.nap.edu/catalog/12482.html

Visit the National Academies Press online, the authoritative source for all books from the National Academy of Sciences, the National Academy of Engineering, the Institute of Medicine, and the National Research Council:

- Download hundreds of free books in PDF
- Read thousands of books online, free
- Sign up to be notified when new books are published
- Purchase printed books
- Purchase PDFs
- Explore with our innovative research tools

Thank you for downloading this free PDF. If you have comments, questions or just want more information about the books published by the National Academies Press, you may contact our customer service department toll-free at 888-624-8373, visit us online, or send an email to comments@nap.edu.

This free book plus thousands more books are available at http://www.nap.edu.

Copyright © National Academy of Sciences. Permission is granted for this material to be shared for noncommercial, educational purposes, provided that this notice appears on the reproduced materials, the Web address of the online, full authoritative version is retained, and copies are not altered. To disseminate otherwise or to republish requires written permission from the National Academies Press.

THE NATIONAL ACADEMIES

Advisers to the Nation on Science, Engineering, and Medicine

Assessment of Explosive Destruction Technologies for Specific Munitions at the Blue Grass and Pueblo Chemical Agent Destruction Pilot Plants

Committee to Review Assembled Chemical Weapons Alternatives Program Detonation Technologies

Board on Army Science and Technology

Division on Engineering and Physical Sciences

NATIONAL RESEARCH COUNCIL
OF THE NATIONAL ACADEMIES

THE NATIONAL ACADEMIES PRESS
Washington, D.C.
www.nap.edu

THE NATIONAL ACADEMIES PRESS 500 Fifth Street, N.W. Washington, DC 20001

Copyright © National Academy of Sciences. All rights reserved.

Assessment of Explosive Destruction Technologies for Specific Munitions at the Blue Grass and Pueblo Chemical Agent Destruction Pilot Plants
http://www.nap.edu/catalog/12482.html

NOTICE: The project that is the subject of this report was approved by the Governing Board of the National Research Council, whose members are drawn from the councils of the National Academy of Sciences, the National Academy of Engineering, and the Institute of Medicine. The members of the committee responsible for the report were chosen for their special competences and with regard for appropriate balance.

This study was supported by Contract No. W911NF-08-C-0034 between the National Academy of Sciences and the U.S. Army. Any opinions, findings, conclusions, or recommendations expressed in this publication are those of the author(s) and do not necessarily reflect the views of the organizations or agencies that provided support for the project.

International Standard Book Number-13: 978-0-309-0XXXX-X
International Standard Book Number-10: 0-309-XXXXX-X

Limited copies of this report are available from

Board on Army Science and Technology
National Research Council
500 Fifth Street, N.W., Room 940
Washington, DC 20001
(202) 334-3118

Additional copies are available from

The National Academies Press
500 Fifth Street, N.W.
Lockbox 285
Washington, DC 20055
(800) 624-6242 or (202) 334-3313 (in the Washington metropolitan area)
Internet, http://www.nap.edu

Copyright 2009 by the National Academy of Sciences. All rights reserved.

Printed in the United States of America

Copyright © National Academy of Sciences. All rights reserved.

THE NATIONAL ACADEMIES

Advisers to the Nation on Science, Engineering, and Medicine

The **National Academy of Sciences** is a private, nonprofit, self-perpetuating society of distinguished scholars engaged in scientific and engineering research, dedicated to the furtherance of science and technology and to their use for the general welfare. Upon the authority of the charter granted to it by the Congress in 1863, the Academy has a mandate that requires it to advise the federal government on scientific and technical matters. Dr. Ralph J. Cicerone is president of the National Academy of Sciences.

The **National Academy of Engineering** was established in 1964, under the charter of the National Academy of Sciences, as a parallel organization of outstanding engineers. It is autonomous in its administration and in the selection of its members, sharing with the National Academy of Sciences the responsibility for advising the federal government. The National Academy of Engineering also sponsors engineering programs aimed at meeting national needs, encourages education and research, and recognizes the superior achievements of engineers. Dr. Charles M. Vest is president of the National Academy of Engineering.

The **Institute of Medicine** was established in 1970 by the National Academy of Sciences to secure the services of eminent members of appropriate professions in the examination of policy matters pertaining to the health of the public. The Institute acts under the responsibility given to the National Academy of Sciences by its congressional charter to be an adviser to the federal government and, upon its own initiative, to identify issues of medical care, research, and education. Dr. Harvey V. Fineberg is president of the Institute of Medicine.

The **National Research Council** was organized by the National Academy of Sciences in 1916 to associate the broad community of science and technology with the Academy's purposes of furthering knowledge and advising the federal government. Functioning in accordance with general policies determined by the Academy, the Council has become the principal operating agency of both the National Academy of Sciences and the National Academy of Engineering in providing services to the government, the public, and the scientific and engineering communities. The Council is administered jointly by both Academies and the Institute of Medicine. Dr. Ralph J. Cicerone and Dr. Charles M. Vest are chair and vice chair, respectively, of the National Research Council.

www.national-academies.org

Copyright © National Academy of Sciences. All rights reserved.

COMMITTEE TO REVIEW ASSEMBLED CHEMICAL WEAPONS ALTERNATIVES PROGRAM DETONATION TECHNOLOGIES

RICHARD J. AYEN, *Chair*, Waste Management Inc. (retired), Jamestown, Rhode Island,
DOUGLAS M. MEDVILLE, *Vice Chair*, MITRE (retired), Reston, Virginia,
ROBIN L. AUTENRIETH, Texas A&M University, College Station
ADRIENNE T. COOPER, Temple University, Philadelphia, Pennsylvania
MARTIN K. GOLLIN, Carmagen, St. Davids, Pennsylvania
DAVID A. HOECKE, Enercon Systems, Inc., Elyria, Ohio
PAUL F. KAVANAUGH, U.S. Army Corps of Engineers (retired), Fairfax, Virginia
TODD A. KIMMELL, Argonne National Laboratory, Chicago, Illinois
GEORGE W. PARSHALL, E.I. DuPont de Nemours & Company (retired), Wilmington, Delaware
JAMES P. PASTORICK, UXO Pro, Inc., Alexandria, Virginia
WILLIAM R. RHYNE, ABS Consulting, Inc. (retired), Kingston, Tennessee

Staff

MARGARET N. NOVACK, Study Director
HARRISON T. PANNELLA, Senior Program Officer
NIA D. JOHNSON, Senior Research Associate
JAMES C. MYSKA, Senior Research Associate
ALICE V.WILLIAMS, Senior Program Assistant

Copyright © National Academy of Sciences. All rights reserved.

BOARD ON ARMY SCIENCE AND TECHNOLOGY

MALCOLM R. O'NEILL, *Chair*, Lockheed Martin Corporation (retired), Vienna, Virginia,
ALAN H. EPSTEIN, *Vice Chair*, Pratt & Whitney, East Hartford, Connecticut,
RAJ AGGARWAL, Rockwell Collins, Cedar Rapids, Iowa
SETH BONDER, The Bonder Group, Ann Arbor, Michigan
JAMES CARAFANO, The Heritage Foundation, Washington, D.C.
ROBERT L. CATTOI, Rockwell International Corporation (retired), Dallas, Texas
DARRELL W. COLLIER, U.S. Army Space and Missile Defense Command (retired), Leander, Texas
JAY C. DAVIS, Lawrence Livermore National Laboratory (retired), Livermore, California
PATRICIA K. FALCONE, Sandia National Laboratories, Livermore, California
RONALD P. FUCHS, The Boeing Company, Seattle, Washington
WILLIAM R. GRAHAM, National Security Research, Inc. (retired), San Marino, California
PETER F. GREEN, University of Michigan, Ann Arbor
CARL GUERRERI, Electronic Warfare Associates, Inc., Herndon, Virginia
M. FREDERICK HAWTHORNE, University of Missouri, Columbia
MARY JANE IRWIN, Pennsylvania State University, University Park
ELLIOT D. KIEFF, Channing Laboratory, Harvard University, Boston, Massachusetts
LARRY LEHOWICZ, Quantum Research International, Arlington, Virginia
EDWARD K. REEDY, Georgia Tech Research Institute (retired), Atlanta
DENNIS J. REIMER, DFI International (retired), Arlington, Virginia
WALTER D. SINCOSKIE, Telcordia Technologies, Inc., Morristown, New Jersey
MARK J.T. SMITH, Purdue University, West Lafayette, Indiana
MICHAEL A. STROSCIO, University of Illinois, Chicago
JUDITH L. SWAIN, University of California at San Diego, La Jolla
WILLIAM R. SWARTOUT, Institute for Creative Technologies, Marina del Rey, California
EDWIN L. THOMAS, Massachusetts Institute of Technology, Cambridge
ELLEN D. WILLIAMS, University of Maryland, College Park

Staff

BRUCE A. BRAUN, Director
CHRIS JONES, Financial Associate
DEANNA P. SPARGER, Program Administrative Coordinator

Copyright © National Academy of Sciences. All rights reserved.

Preface

The Committee to Review Assembled Chemical Weapons Alternatives Program (ACWA) Detonation Technologies was appointed by the National Research Council (NRC) in response to a request by the U.S. Army's Program Manager for Assembled Chemical Weapons Alternatives (PMACWA).

Three types of detonation technologies available from technology vendors and the Army's explosive destruction system (EDS), collectively known as explosive destruction technologies (EDTs), are being considered for use at the Blue Grass Army Depot in Richmond, Kentucky, and the Pueblo Chemical Depot in Pueblo, Colorado. For the destruction of the bulk of the chemical weapons stockpiled at both sites, the current processes that the Army has selected for the main processing facilities center on weapon disassembly to access agent and energetics, followed by hydrolysis of the agent and energetics and subsequent secondary waste treatment. EDTs are being considered as supplemental technologies for destroying certain of the weapons at Blue Grass and Pueblo to improve operational safety and/or to accelerate the overall weapons destruction schedule. The three types of vendor-supplied EDTs under consideration are the detonation of ammunition in a vacuum integrated chamber (DAVINCH) from Kobe Steel, Ltd.; the transportable detonation chamber (TDC), formerly known as the controlled detonation chamber (CDC), from CH2M HILL; and the static detonation chamber (SDC) from Dynasafe, formerly known as the Dynasafe static kiln.

The committee's focus was on updating its evaluation of the EDTs presented in an NRC report from 2006, *Review of International Technologies for Destruction of Recovered Chemical Warfare Materiel* (sometimes called the International Technologies report), thoroughly understanding the requirements for the EDTs at Blue Grass and Pueblo, and then evaluating and rating the various existing EDTs with respect to how well they meet those requirements. The committee received presentations by the vendors of the DAVINCH, TDC, and Dynasafe technologies and by the U.S. Army on the EDS. Of special interest were any improvements or changes to the technologies and additional testing or operational experience since the International Technologies report was prepared. The requirements at Blue Grass and Pueblo were provided by the U.S. Army.

Copyright © National Academy of Sciences. All rights reserved.

This report responds to the following statement of task:

Statement of Task

The Program Manager for Assembled Chemical Weapons Alternatives (PMACWA) is directing the design and construction of facilities for the destruction of the chemical weapons that are stored at the Pueblo Chemical Depot in Pueblo, Colorado, and the Blue Grass Army Depot in Richmond, Kentucky. Both facilities will employ reverse assembly to access agent and energetics in the weapons, followed by hydrolysis of the agent and energetics.

However, plans currently also call for installation of a system employing a detonation technology or the Nonstockpile Chemical Materiel (NSCM) Project's Explosive Destruction System (EDS) to process leaking munitions and/or contaminated explosive components. Detonation technology is not in the BGCAPP [Blue Grass Chemical Agent Destruction Pilot Plant] design but is under consideration for processing leaking munitions, mustard-filled projectiles, and noncontaminated rocket motors. The detonation technologies and the EDS do not employ reverse assembly of munitions and will therefore be used to destroy atypical weapons—weapons with either chemical or mechanical anomalies that might result in problems when fed to the reverse assembly process.

The detonation technologies to be considered are the DAVINCH (detonation of ammunition in a vacuum integrated chamber), the CDC (controlled detonation chamber) and the Dynasafe static kiln. The DAVINCH and CDC employ an explosive donor charge that is placed around the munition. The munition is placed within an explosive containment structure, and the donor charge is detonated, resulting in the destruction of agent and energetics. The Dynasafe static kiln employs insertion of the munition into an externally heated kiln. The high temperature of the kiln results in deflagration, detonation, or burning of the munition's explosive fill and destruction of the agent. The EDS employs explosive charges to open a munition followed by use of neutralization chemicals to destroy the agent.

The NRC investigated the three detonation technologies and the EDS as part of a study titled Review of International Technologies for Destruction of Recovered Chemical Warfare Materiel. Most of the information presented in the resulting report was gathered nearly two years ago. Development and employment of these technologies has proceeded rapidly, and an update of that review is needed. The technologies also need to be evaluated against the Pueblo and Blue Grass requirements.

The National Research Council will establish an ad hoc committee to

- Update the previously published evaluation of the DAVINCH, CDC, and Dynasafe static kiln technologies for the destruction of chemical munitions, to include the NSCM EDS or any viable detonation technologies. Evaluation factors will include process maturity, process efficacy/throughput rate, process safety, public and regulatory

Copyright © National Academy of Sciences. All rights reserved.

acceptability, secondary waste issues, and destruction verification capability.

- Obtain detailed information on the requirements of the specific applications at Pueblo and Blue Grass. Rank each of the three detonation technologies and the EDS against these requirements, and recommend a preferred technology.

The committee was also asked to incorporate into the report its thoughts on design changes and upgrades that would allow the technologies to better process a large number of mustard agent rounds—on the order of 15,000 at Blue Grass—in a reasonable amount of time. This was to be done for the three vendor-supplied technologies but not the EDS. Thoughts that were relevant to the destruction of M55 rocket motors at Blue Grass and to overpacked munitions at Pueblo were also to be offered. The committee was to specifically address reliability, maintainability, and capacity.

The committee held three meetings. The first was at the National Academy of Sciences building in Washington, D.C. Presentations were received from vendors on the Dynasafe and TDC technologies and from the Army on the EDS. The requirements for the Blue Grass and Pueblo sites were discussed in a teleconference with Joseph Novad, Technical Director, ACWA. The second meeting was at the Keck Center in Washington, D.C. A presentation on the DAVINCH technology was received from the vendor and another on the use of the TDC at Schofield Barracks in Hawaii was received from the Army. The third meeting was held at the J. Erik Jonsson Center at Woods Hole, Massachusetts.

The committee thanks the vendors and the staff of ACWA and the Chemical Materials Agency (CMA)-NSCM Project. The PMACWA, Kevin Flamm, and his staff, especially Joseph Novad and Ray Malecki, provided information on the requirements at the Blue Grass and Pueblo sites. Information on the EDS was received from Allan Kaplan, CMA-NSCM Project. One member of the committee witnessed the TDC in operation at Schofield Barracks in Hawaii, which provided valuable insight into the TDC system. The committee thanks F. David Hoffman, System Development Group Leader, NSCM project, for his help in arranging this visit to Schofield Barracks. A very useful teleconference call involving committee members, Colorado regulators, and NRC staff was held on May 22, 2008. The committee especially wishes to thank Doug Knappe, Kevin Mackey, and James Hindman of the Colorado Department of Public Health and Environment (CDPHE) for their participation. A similar and, again, very useful teleconference call involving Kentucky regulators was held on July 22, 2008. The committee wishes to thank Bill Buchanan, John Jump, Leasue Meyers, Shannon Powers, and April Webb of the Kentucky Department of Environmental Protection (KDEP) for their participation.

The committee also offers its thanks for the support and assistance of National Research Council staff members. Support was provided by BAST director Bruce Braun and study director Margaret Novack. Nia Johnson, Harrison Pannella, Angela Martin, Alice Williams, and Jim Myska capably assisted the committee in its fact-finding activities, in its meeting and trip arrangements, and in the production of this report.

The Board on Army Science and Technology (BAST) members listed on page vi were not asked to endorse the committee's conclusions or recommendations, nor did they review the final draft of this report before its release, although board members with

Copyright © National Academy of Sciences. All rights reserved.

appropriate expertise may be nominated to serve as formal members of study committees or as report reviewers. BAST was established in 1982 by the National Academies at the request of the Army. It brings to bear broad military, industrial, and academic experience and scientific, engineering, and management expertise on Army technical challenges and other issues of importance to senior Army leaders. BAST also discusses potential studies of interest; develops and frames study tasks; ensures proper project planning; suggests potential committee members and reviewers for reports produced by fully independent, ad hoc study committees; and convenes meetings to examine strategic issues.

Richard J. Ayen, *Chair*
Committee to Review Assembled Chemical Weapons
Alternatives Program Detonation Technologies

Copyright © National Academy of Sciences. All rights reserved.

Acknowledgment of Reviewers

This report has been reviewed in draft form by individuals chosen for their diverse perspectives and technical expertise, in accordance with procedures approved by the National Research Council's (NRC's) Report Review Committee. The purpose of this independent review is to provide candid and critical comments that will assist the institution in making its published report as sound as possible and to ensure that the report meets institutional standards for objectivity, evidence, and responsiveness to the study charge. The review comments and draft manuscript remain confidential to protect the integrity of the deliberative process. We wish to thank the following individuals for their review of this report:

Williams Bacon, Shaw Environmental & Infrastructure,
Robert A. Beaudet, University of Southern California,
Gene Dyer, Consultant,
Willard C. Gekler, Consultant,
Dan Luss, NAE, University of Houston,
James F. Mathis, NAE, Exxon Corporation (retired),
John A. Merson, Sandia National Laboratories, and
William J. Walsh, Pepper Hamilton, LLP.

Although the reviewers listed above have provided many constructive comments and suggestions, they were not asked to endorse the conclusions or recommendations, nor did they see the final draft of the report before its release. The review of this report was overseen by LTG Henry Hatch, U.S. Army retired. Appointed by the National Research Council, he was responsible for making certain that an independent examination of this report was carried out in accordance with institutional procedures and that all review comments were carefully considered. Responsibility for the final content of this report rests entirely with the authoring committee and the institution.

Copyright © National Academy of Sciences. All rights reserved.

Assessment of Explosive Destruction Technologies for Specific Munitions at the Blue Grass and Pueblo Chemical Agent Destruction Pilot Plants
http://www.nap.edu/catalog/12482.html

Contents

SUMMARY S-1

1 INTRODUCTION 1-1
Purpose of This Report, 1-1
Requirements For Use of Explosive Destruction Technologies at ACWA Sites, 1-2
Requirements for the Blue Grass Site, 1-2
Requirement for the Pueblo Site, 1-3
Assembled Chemical Weapons Alternatives Program, 1-3
Background, 1-3
BGCAPP Process Description, 1-4
PCAPP Process Description, 1-6
Types of Explosive Destruction Technologies, 1-7
"Cold" Detonation Versus "Hot" Detonation, 1-7
CH2M HILL TC-60 TDC, 1-8
CH2M HILL D-100, 1-9
DAVINCH, 1-10
Dynasafe SDC2000, 1-10
Explosive Destruction System (EDS), 1-11
Study Scope and Report Structure, 1-11
References, 1-13

2 EVALUATION FACTORS SPECIFIC TO ACWA SITES APPLICATION 2-1
Selection of Evaluation Factors, 2-1
Description of Evaluation Factors, 2-2
Process Maturity, 2-2
Process Efficacy, 2-2
Process Throughput, 2-3
Process Safety, 2-3
Public and Regulatory Acceptability in a U.S. Context, 2-3
Secondary Waste Issues, 2-4
Destruction Verification Capability, 2-4
Process Flexibility, 2-4
Assessment of Evaluation Factors Against Directives Reflected in the Statement of Task, 2-5
References, 2-5

Copyright © National Academy of Sciences. All rights reserved.

3 CURRENT STATUS OF EXPLOSIVE DESTRUCTION TECHNOLOGIES 3-1
Introduction, 3-1
Summary of Experience Since Early 2006, 3-1
Transportable Detonation Chamber Technology, 3-3
Changes to the Process Since Early 2006, 3-3
Additional Experience Since Early 2006, 3-4
Proposal for Static Firing of Noncontaminated Rocket Motors, 3-8
Thoughts on Design Changes and Upgrades, 3-10
DAVINCH Technology, 3-11
Changes to the Process Since Early 2006, 3-11
Additional Experience Since Early 2006, 3-13
Future Developments for DAVINCH, 3-15
Thoughts on Design Changes and Upgrades, 3-15
Dynasafe Technology, 3-16
Changes to the Process Since Early 2006, 3-16
Dynasafe SDC2000 Tests for BGCAPP, 3-18
Thoughts on Design Changes and Upgrades, 3-21
EDS Technology, 3-21
EDS-2, 3-22
Changes in the Process Since Early 2006, 3-24
Additional Experience Since Early 2006, 3-24
Future Plans, 3-25
Regulatory Approval and Permitting, 3-26
General,3-26
Technology-Specific Regulatory Considerations, 3-27
TDC, 3-28
DAVINCH, 3-29
Dynasafe SDC, 3-29
EDS, 3-31
References, 3-32

4 RANKING OF EXPLOSIVE DESTRUCTION TECHNOLOGIES FOR PROPOSED BGCAPP AND PCAPP APPLICATIONS……..4-1
Introduction, 4-1
Basis for Assessment, 4-1
Requirement BG-1: Destruction of Approximately 70,000 Noncontaminated M55 Rocket Motors at Blue Grass, 4-3
Process Maturity, 4-3
Process Efficacy, 4-5
Process Throughput, 4-7
Process Safety, 4-9
Public and Regulatory Acceptability in a U.S. Context, 4-9
Secondary Waste Issues, 4-10
Destruction Verification Capability, 4-11
Process Flexibility, 4-11

Copyright © National Academy of Sciences. All rights reserved.

Summary Assessment for Requirement BG-1, 4-11
Requirement BG-2: Destruction of Approximately 15,000 Mustard Agent H-filled 155-mm projectiles at Blue Grass, 4-13
Process Maturity, 4-13
Process Efficacy, 4-15
Process Throughput, 4-17
Process Safety, 4-18
Public and Regulatory Acceptability in a U.S. Context, 4-19
Secondary Waste Issues, 4-20
Destruction Verification Capability, 4-21
Process Flexibility, 4-23
Summary Assessment for Requirement BG-2, 4-23
Requirement BG-3: Destruction of Approximately 70,000 Noncontaminated M55 Rocket Motors and Approximately 15,000 Mustard Agent H-filled 155-MM Projectiles at Blue Grass, 4-24
Process Maturity, 4-24
Process Efficacy, 4-25
Process Throughput, 4-26
Process Safety, 4-27
Public and Regulatory Acceptability in a U.S. Context, 4-27
Secondary Waste Issues, 4-28
Destruction Verification Capability, 4-29
Process Flexibility, 4-29
Summary Assessment for Requirement BG-3, 4-30
Requirement P-1: Destruction of All Leakers and Reject Munitions at Pueblo Comprising Approximately 1,000 Rounds of a Mustard Agent HD/HT-filled Mixture of 4.2-in. Mortars and 105- and 155-mm projectiles, 4-31
Process Maturity, 4-32
Process Efficacy, 4-33
Process Throughput, 4-34
Process Safety, 4-36
Public and Regulatory Acceptability in a U.S. Context, 4-37
Secondary Waste Issues, 4-38
Destruction Verification Capability, 4-39
Process Flexibility, 4-40
Summary Assessment for Requirement P-1, 4-41
References, 4-42

APPENDIXES

A Chapter 4 from the 2006 NRC report *Review of International Technologies for Destruction of Recovered Chemical Warfare Materiel* A-1
B Committee Meetings and Site Visits B-1
C Biographical Sketches of Committee Members C-1

Copyright © National Academy of Sciences. All rights reserved.

Tables and Figures

TABLES

S-1 EDT Ratings Summary for Requirement BG-1, Destruction of Approximately 70,000 Noncontaminated M55 Rocket Motors at Blue Grass, SUM-14
S-2 EDT Ratings Summary for Requirement BG-2, Destruction of 15,000 Mustard Agent H-Filled 155-mm Projectiles at Blue Grass, SUM-14
S-3 EDT Ratings Summary for Requirement BG-3, Destruction of Approximately 70,000 Noncontaminated M55 Rocket Motors and 15,000 Mustard Agent H-Filled 155-mm Projectiles at Blue Grass, SUM-15
S-4 EDT Ratings Summary for Requirement P-1, Destruction of All Leakers and Reject Munitions at Pueblo Comprising Approximately 1,000 rounds of a Mustard Agent HD/HT-Filled Mixture of 4.2-in. Mortars and 105- and 155-mm projectiles, SUM-16

1-1 Blue Grass Army Depot Chemical Weapons Inventory, 1-14
1-2 Description of Overpacks, 1-15
1-3 Pueblo Chemical Depot Weapons Inventory, 1-16

2-1 Process Maturity Subfactors, 2-6
2-2 Process Efficacy Subfactors, 2-7
2-3 Process Safety Subfactors, 2-7
2-4 Subfactors for Public and Regulatory Acceptability in a U.S. Context, 2-8
2-5 Subfactors for Secondary Waste Issues, 2-9
2-6 Subfactors for Destruction Verification Capability (for Chemical Agents), 2-10

3-1 VOCs at the Inlet and Outlet to the Air Filtration Unit #2 of the TDC of CH2M HILL, 3-34
3-2 Air Emissions of Metals from the TDC of CH2M HILL, 3-35
3-3 Stack Emissions of Particulate Matter, Dioxin/Furan, HCl, and Semivolatile Organic Compounds from the TDC of CH2M HILL, 3-35
3-4 Selected Total Metal Results in Solid Waste from the TDC of CH2M HILL, 3-36
3-5 Munition Destruction by DAVINCH at Poekapelle, Belgium through July 14, 2008, 3-38
3-6 Recent Deployments of EDS Units, 3-39

4-1 Requirements Proposed for EDT Processing of Chemical Stockpile Items at Blue Grass Army Depot and Pueblo Chemical Depot, 4-44
4-2 Throughput Rates of Five EDTs and Their Implications for Schedule: Requirements BG-1, BG-2, and BG-3, 4-45

Copyright © National Academy of Sciences. All rights reserved.

4-3 EDT Ratings Summary for Requirement BG-1, Destruction of Approximately 70,000 Noncontaminated M55 Rocket Motors at Blue Grass, 4-46
4-4 EDT Ratings Summary for Requirement BG-2, Destruction of 15,000 Mustard Agent H-filled 155-mm Projectiles at Blue Grass, 4-47
4-5 EDT Ratings Summary for Requirement BG-3, Destruction of Approximately 70,000 Noncontaminated M55 Rocket Motors and 15,000 Mustard Agent H-filled 155-mm Projectiles at Blue Grass, 4-48
4-6 EDT Ratings Summary for Requirement P-1, Destruction of all Leakers and Reject Munitions at Pueblo Comprising Approximately 1,000 Rounds of a Mustard Agent HD/HT-Filled Mixture of 4.2-in. Mortars and 105- and 155-mm Projectiles, 4-49

FIGURES

1-1 Main operations of the BGCAPP process, 1-17
1-2 Main operations of the PCAPP process, 1-18

3-1 The DAVINCH Glid-Arc cold plasma thermal oxidizer, 3-40
3-2 Process flow diagram for DAVINCH, 3-41
3-3 Items destroyed in the DAVINCH DV50 at Poelkapelle, Belgium, 3-42
3-4a Dynasafe SDC2000 flow diagram showing sampling ports, 3-43
3-4b Dynasafe SDC2000 flow diagram showing sampling ports (continued), 3-43
3-4 Diagram of the EDS-2 vessel on its trailer, 3-44

Copyright © National Academy of Sciences. All rights reserved.

Acronyms and Abbreviations

ACWA	Assembled Chemical Weapons Alternatives
AEL	airborne exposure limit
ANS	agent neutralization system
BGAD	Blue Grass Army Depot
BGCAPP	Blue Grass Chemical Agent Destruction Pilot Plant
BPBGT	Bechtel Parsons Blue Grass Team
CAA	Clean Air Act
$CaCl_2$	calcium chloride
CATOX	catalytic oxidation
CBARR	Chemical Biological Applications and Risk Reduction
CDC	controlled detonation chamber
CMA	Chemical Materials Agency
CO	carbon monoxide
CWC	Chemical Weapons Convention
DAVINCH	detonation of ammunition in vacuum integrated chamber
DDESB	Department of Defense Explosive Safety Board
DE	destruction efficiency
DOD	Department of Defense
DRE	destruction and removal efficiency
EBH	energetics batch hydrolyzer
ECBC	Edgewood Chemical Biological Center
EDS	explosive destruction system
EDS-1	EDS Phase 1
EDS-2	EDS Phase 2
EDS-3	EDS Phase 3
EDT	explosive destruction technology
EIS	environmental impact statement
FSS	fragment suppression system
FTO	flameless thermal oxidizer
GB	nerve agent (sarin)
GEKA	Gesellschaft zur Entsorgung Chemischen Kampfstoffe und Rüstungs-Altlasten mbH

Copyright © National Academy of Sciences. All rights reserved.

Assessment of Explosive Destruction Technologies for Specific Munitions at the Blue Grass and Pueblo Chemical Agent Destruction Pilot Plants
http://www.nap.edu/catalog/12482.html

H	mustard agent
H_2	hydrogen
HCl	hydrochloric acid
HD	distilled (sulfur) mustard agent
HEPA	high-efficiency particulate air
HN	nitrogen mustard
HT	distilled mustard mixed with bis(2-chloroethylthioethyl) ether
ICB	immobilized cell bioreactor
LPMD	linear projectile/mortar disassembly (machine)
MPHRA	multipathway health risk assessment
MPT	metal parts treater
MTU	munitions treatment unit
NEPA	National Environmental Policy Act
NEW	net explosive weight
NRC	National Research Council
NSCMP	Non-Stockpile Chemical Materiel Project
O_2	oxygen
PBA	Pine Bluff Arsenal
PBEDS	Pine Bluff Explosive Destruction System
PCAPP	Pueblo Chemical Agent Destruction Pilot Plant
PCB	polychlorinated biphenyl
PCD	Pueblo Chemical Depot
PMACWA	Program Manager for Assembled Chemical Weapons Alternatives
PPE	personnel protective equipment
RCM	rocket cutter machine
RCRA	Resource Conservation and Recovery Act
RCWM	recovered chemical warfare materiel
RD&D	research, development, and demonstration
RDT&E	research, development, testing, and evaluation
SCWO	supercritical water oxidation
SDC	static detonation chamber
SFT	shipping and firing tube
TDC	transportable detonation chamber
TSCA	Toxic Substances Control Act
TSDF	treatment, storage, and disposal facility

Copyright © National Academy of Sciences. All rights reserved.

VSL	vapor screening level
VX	a nerve agent

Copyright © National Academy of Sciences. All rights reserved.

Assessment of Explosive Destruction Technologies for Specific Munitions at the Blue Grass and Pueblo Chemical Agent Destruction Pilot Plants
http://www.nap.edu/catalog/12482.html

Summary

The Army's ability to meet public and congressional demands to destroy expeditiously all of the U.S. declared chemical weapons would be enhanced by the selection and acquisition of appropriate explosive destruction technologies (EDTs) to augment the main technologies to be used to destroy the chemical weapons currently at the Blue Grass Army Depot (BGAD) in Kentucky and the Pueblo Chemical Depot (PCD) in Colorado. The Army is considering four EDTs for the destruction of chemical weapons. Three of them are available from private sector vendors; the fourth is the Army-developed explosive destruction system (EDS). Because of the high public, congressional, and regulatory visibility of the chemical weapons destruction program, it is critical to provide a transparent comparative technical evaluation of these technologies to assist the Army in selecting a technology or combination of technologies to augment the main destruction operations at BGAD and PCD.

The specific models of the three vendor-supplied EDTs designed for use on mustard agent munitions evaluated in this report are the DV65 model of the detonation of ammunition in a vacuum integrated chamber (DAVINCH) technology from Kobe Steel, Ltd.; the TC-60 model of the transportable detonation chamber (TDC), formerly the controlled detonation chamber (CDC), from CH2M HILL; and the SDC2000 model of the static detonation chamber (SDC), formerly called the static kiln, from Dynasafe. These three EDTs, along with the Army's EDS, were previously evaluated by the NRC for their usefulness in destroying recovered chemical warfare materiel from burial sites, and the evaluations were reported on in 2006, in *Review of International Technologies for Destruction of Recovered Chemical Warfare Materiel*, hereinafter referred to as the International Technologies report.

Two of these three EDTs—the DAVINCH and Dynasafe's SDC2000—and a variant of the third EDT, which is designed for the destruction of conventional weapons only, are being considered for the destruction of the nearly 70,000 M55 rocket motors at BGAD that have not been contaminated with chemical agent. The last mentioned is the D-100 model from CH2M HILL. This system was not described in the International Technologies report.

Copyright © National Academy of Sciences. All rights reserved.

Assessment of Explosive Destruction Technologies for Specific Munitions at the Blue Grass and Pueblo Chemical Agent Destruction Pilot Plants
http://www.nap.edu/catalog/12482.html

The committee's complete statement of task is provided in the preface. It's main responsibilities are these:

1. Update earlier evaluations of the DV-65, the TC-60, the SDC2000, and the EDS Phase II (EDS-2), which appeared in the International Technologies report, as well as any other viable detonation technologies, based on considerations of process maturity, process efficacy, process throughput, process safety, public and regulatory acceptability, secondary waste issues, destruction verification capability, and, where applicable, flexibility.[1]
2. Obtain detailed information on each of the requirements at BGAD and PCD and rate each of the existing suitable EDTs available from the vendors and the Army's EDS with respect to how well it satisfies these requirements in order to recommend a preferred technology for each requirement.

REQUIREMENTS FOR USE OF EXPLOSIVE DESTRUCTION TECHNOLOGIES AT ACWA SITES

This report addresses three prospective requirements involving the use of EDTs to augment the primary chemical weapons destruction processes of the Blue Grass Chemical Agent Destruction Pilot Plant (BGCAPP), which is now under construction:

- Requirement BG-1 is the processing of approximately 70,000 M55 rocket motors at Blue Grass that are not contaminated with agent. Current plans call for shipment of these noncontaminated rocket motors to an off-site location for processing; destruction in an EDT is being considered as an alternative.
- Requirement BG-2 is the processing of approximately 15,000 mustard agent H projectiles by one or more EDTs. According to Assembled Chemical Weapons Alternatives (ACWA) staff, this would save approximately 8 months in the overall BGCAPP schedule.
- Requirement BG-3 is the combination of requirements BG-1 and BG-2.

The report also addresses a single requirement involving the use of EDTs to augment operations at the Pueblo Chemical Agent Destruction Pilot Plant (PCAPP):

- Requirement P-1 is the destruction of all leakers and reject munitions at Pueblo. About 1,000 mustard agent-filled munitions, a mixture of 4.2-in. mortars, 105-mm projectiles, and 155-mm projectiles, would be destroyed. These munitions will be overpacked.

[1]The previous evaluations appeared in *Review of International Technologies for Destruction of Recovered Chemical Warfare Materiel,* Chapter 4, which is reprinted as Appendix A of this report.

Copyright © National Academy of Sciences. All rights reserved.

Assessment of Explosive Destruction Technologies for Specific Munitions at the Blue Grass and Pueblo Chemical Agent Destruction Pilot Plants
http://www.nap.edu/catalog/12482.html

THE EXPLOSIVE DESTRUCTION TECHNOLOGIES

TC-60 TDC

The CH2M HILL TDC was originally developed in the United States then later used for treating abandoned chemical munitions recovered from burial sites in Belgium. It was further refined through testing programs in the United Kingdom and was recently used in Hawaii to destroy recovered chemical warfare materiel. No substantial changes have been made to the TDC process since the International Technologies report was published in 2006.

The TC-60 TDC has three main components: a detonation chamber, an expansion chamber, and an emissions control system. A munition wrapped in explosive is mounted in the detonation chamber. The floor of the chamber is covered with pea gravel, which absorbs some of the blast energy. Bags containing water are suspended near the projectile to help absorb blast energy and to produce steam, which reacts with agent vapors. Oxygen is added when destroying munitions containing mustard agent. After the explosive is detonated, the gases are vented to an expansion chamber, then to the emissions control system. The offgas treatment system includes a reactive-bed ceramic filter to remove acidic gases and to collect particulates such as soot and dust from the pea gravel. A catalytic oxidation (CATOX) unit oxidizes hydrogen, carbon monoxide, and organic vapors from the gas stream before the stream is vented through a carbon adsorption bed and released to the atmosphere.

D-100

A nontransportable detonation chamber, termed the D-100 and offered by CH2M HILL, has been installed at BGAD for destruction of conventional munitions (as opposed to the chemical stockpile stored there).[2] BGAD, in partnership with CH2M HILL, has proposed to BGCAPP a program to test the technical feasibility of using the D-100 system to destroy the rocket motors by static firing. The D-100 has a large detonation chamber, with internal dimensions of 14 ft wide × 16 ft high × 20 ft long. This chamber is connected to a cylindrical expansion tank that is 10 ft in diameter and 71 ft long. Exhaust gases pass from the expansion tank to an air pollution control system consisting of a cartridge-type particulate filter with pulsed jet cleaning, followed by an exhaust fan. Approval has been obtained from DOD's Explosive Safety Board (DDESB) for a site safety submission that includes the use of 49.3 lb TNT-equivalent net explosive weight (NEW) total explosives—donor plus munition. The Resource Conservation and Recovery Act (RCRA) permitting of this system is under way.

Before being processed, the rocket motors would be removed from their shipping and firing tubes (SFTs) and their fins would be banded. Banding the fins prevents them from deploying when they are removed from the SFTs. This allows easier handling when mounting the rocket motors in the firing stand and, after firing, removing the motors from

[2]The CH2M HILL D-100 technology is not suitable for destroying chemical weapons.

Copyright © National Academy of Sciences. All rights reserved.

the stand. The motors would then be loaded into a static firing stand, the stand moved into the detonation chamber, and the firing wires connected. After the chamber door is closed, the rocket motors would be ignited. The door would then be opened and the chamber ventilated for 5 to 10 minutes. The firing stand would be removed and replaced with another firing stand freshly loaded with rocket motors. It is expected that 4 to 6 motors can be destroyed in each firing cycle and that the throughput rate would be up to 18 motors per hour. BGAD has performed calculations showing that propellant in the rocket would have a burn time of approximately 2.5 seconds and that the temperature in the chamber would rise by 32°F for each rocket fired.

DV65

Various DAVINCH models, corresponding to various NEWs of the munition and its donor charge, have been built by Kobe Steel, Ltd., under the corporate mark KOBELCO and used in Japan and Belgium to destroy chemical weapons. The technology has not been used in the United States.

The process uses a detonation chamber in which chemical munitions are destroyed when donor charges surrounding the munitions are detonated. Offgases are produced that require secondary treatment. A simplified process flow diagram is shown in Figure 4-3 of the 2006 International Technologies report (see Appendix A). Since that report was issued, however, several changes have been made and implemented as part of the ongoing application of the DAVINCH technology at the Belgian military facility at Poelkapelle, Belgium (see Chapter 3). The system installed at Poelkapelle is the DAVINCH DV50 model, a system with a slightly lower NEW capability than the DV65 model evaluated in this report. The most substantial change involves the replacement of the offgas combustion chamber with a cold plasma oxidizer. In its current configuration, the offgases resulting from agent destruction in the DAVINCH vessel are filtered to remove particulates and, with oxygen from an external supply, are pumped into the cold plasma oxidizer, which oxidizes CO to CO_2. Condensate water is then recovered from the exhaust gas; the gas is passed through activated carbon and exhausted to the atmosphere.

SDC2000

The SDC2000 static detonation chamber is manufactured by Dynasafe AB, a Swedish company. Details of the design and operation of the Dynasafe process are given in Appendix A, which is Chapter 4 of the 2006 International Technologies report. The Dynasafe information presented in Appendix A remains generally the same.

The detonation chamber is a nearly spherical, armored, high-alloy stainless steel vessel. The vessel is double-walled, with the inner wall considered to be armored (UXB International, 2007). The 7.5-cm thickness of the inner wall is much greater than required by the mechanical stress loads caused by detonation pressures. Chemical munitions are placed in a cardboard box or carrier, which is transported to the top of the system. The boxed munitions are fed into the detonation chamber through two sequential loading chambers. The boxed munitions are dropped onto a heated (550°C-600°C) shrapnel (scrap) bed at the bottom of the detonation chamber, resulting in deflagration, detonation,

Copyright © National Academy of Sciences. All rights reserved.

or burning of the munition's explosive fill. The chemical agent in the munitions is destroyed by the shock wave from the detonation or by decomposition due to the high heat in the chamber.

The offgas treatment system includes a cyclone for removal of large particulates and a flameless thermal oxidizer that converts carbon monoxide and hydrogen to carbon dioxide and water. This is followed by a fast quench system to minimize dioxin and furan formation, acidic and basic (caustic) scrubbers, and an adsorber/particulate filter system that uses Sorbalite, a mixture of calcium oxides and carbonates with activated carbon.

EDS

The U.S. Army's EDSs are trailer-mounted mobile systems originally intended to destroy explosively configured chemical munitions that are deemed unsafe to transport. The system has been used to destroy chemical munitions with or without explosive components. At the heart of the EDS system is an explosion containment vessel. The EDS Phase 2 (EDS-2) containment vessel is designed to handle munitions containing up to 4.8 lb TNT-equivalent of explosives. The EDS uses explosive shaped charges to access the agent cavity and to destroy any energetics in the munition. After detonation of the shaped charges, reagents appropriate to the agent to be neutralized are pumped into the vessel and the vessel contents are mixed until the treatment goal has been attained. After the concentration of chemical agent falls below the treatment goal, as determined by sampling the contents of the chamber, the liquid waste solution is transferred out of the chamber into a waste drum. The drummed EDS liquid waste is normally treated further at a commercial hazardous waste treatment, storage, and disposal facility (TSDF).

EVALUATION CRITERIA

A rating system of 0 to 10 was used for each of eight evaluation factors for requirements BG-1, BG-2, BG-3, and P-1. These ratings reflect the committee's assessment of how well an EDT would perform in comparison with other EDTs in respect to eight evaluation factors, as described in detail in Chapter 2. The results are shown in Tables S-1, S-2, S-3, and S-4. The overall approach to this assessment is explained in Chapter 4. Each committee member independently assigned a value based on the following:

- The information made available for each candidate EDT;
- The discussions and deliberations of the committee members as a group; and
- A committee member's perspective based on his or her area of expertise.

The committee used its collective judgment in rating technologies according to the factors and recognizes that the procedure to some degree was a subjective one. Furthermore, the committee did not evaluate or compare the technologies based on total life-cycle costs, cost per munition destroyed, or any other economic factors due to the proprietary nature of the information that would be needed to make such an evaluation,

Copyright © National Academy of Sciences. All rights reserved.

Assessment of Explosive Destruction Technologies for Specific Munitions at the Blue Grass and Pueblo Chemical Agent Destruction Pilot Plants
http://www.nap.edu/catalog/12482.html

nor was it asked to do so. See the section "Basis for Assessment" at the beginning of Chapter 4 for information on how the numerical ratings of 0 through 10 were assigned by committee members.

Using the results of the rating procedure, the committee recommended one or more EDTs that would best satisfy each requirement. Small differences, up to about five points, in ratings were not considered to be significant. The main finding and recommendation from Chapter 4 associated with each of the four requirements—BG-1, BG-2, BG-3, and P-1— are given at the end of the text coverage for each requirement.

A wealth of information on the characteristics and capabilities of the technology, on recent advances in its development, and the arguments for assigning ratings is contained in Chapters 3 and 4, so that in addition to noting the individual and summed numerical ratings, a reader should review these other chapters before engaging in discussions on the selection of an EDT for a particular requirement.

REQUIREMENT BG-1: DESTRUCTION OF APPROXIMATELY 70,000 NONCONTAMINATED M55 ROCKET MOTORS AT BLUE GRASS

No processing of agent is involved, and this requirement can be considered to amount to conventional munitions disposal. The M55 rocket motor contains 19.3 lb of M28 double base (nitroglycerin and nitrocellulose) cast grain propellant.[3] The U.S. Army's EDS is not intended for processing M55 rockets because its explosive containment capacity (4.8 lb NEW) is only about one-fourth of the capacity needed for a rocket motor. After discussions with the ACWA staff, it was decided to not evaluate the TC-60 TDC for the destruction of noncontaminated rocket motors by either a static firing approach or a donor charge approach for Requirement BG-1, mainly because the TC-60 TDC is not designed for such an application but also because CH2M HILL offers the D-100 system, which is designed to destroy conventional weapons and which, if testing is successful, should be usable for static firing of the noncontaminated rocket motors. Moreover, as previously explained, a D-100 system is already installed at BGAD. Accordingly, the D-100 system was evaluated for Requirement BG-1 and the TC-60 TDC was evaluated for Requirement BG-2.

An analysis by BGAD concluded that between four and six motors could be fired in each cycle with the D-100, with the vendor claiming a firing cycle time of 20 minutes. Based on six motors per cycle, three cycles per hour, and 10 hours per day, the daily throughput of motors would be 180. On this basis the committee projected a campaign length ranging from about 1.2 years to about 2.5 years.

Use of the D-100 would not require attaching donor explosives to the rocket motors. The firing of the rocket motors would instead be initiated using the existing igniters. If they are no longer reliable, new igniters could be installed in the motors.

The volumes of wastes generated are small. The scrap metal will of course be free of chemical agent. The dust from the filter will contain lead from the lead stearate in the propellant. It could possibly be defined as a RCRA hazardous waste.

[3]http://www.fas.org/man/dod-101/sys/land/m55.htm.

Copyright © National Academy of Sciences. All rights reserved.

Two D-100 systems have been installed at the Milan Army Ammunition Plant in Tennessee. Both have been permitted and have been used to destroy 25,000 155-mm projectiles containing submunition grenades.

A testing program with the goal of demonstrating that the D-100 will work as expected has been proposed, but no actual testing has been done. Tests with actual rockets would be needed before this technology could be selected for Requirement BG-1.

DAVINCH

The DAVINCH DV65 is capable of destroying M55 rocket motors, although to increase throughput, a proposed longer version of the DAVINCH, the DV120, might be used. However, the DAVINCH technology has not yet been permitted to operate in the United States since permits required under the RCRA and other laws cannot be applied for unless a particular application exists.

The DAVINCH system currently being used in Kanda Port, Japan, the DV65, has an explosion containment capacity of 65 kg TNT-equivalent. The manufacturer claims that it can process four M55 rocket motors per shot with a throughput rate of nine shots (detonation events) per 10-hour day, which amounts to a cycle time of slightly more than 1 hour. From this information, the committee has projected a campaign length ranging from about 6.2 years to about 12.5 years for requirement BG-1.

In limited testing, it was demonstrated that a DAVINCH system is capable of destroying a simulated rocket motor. Tests with actual rockets would be needed before this technology could be selected for Requirement BG-1.

SDC2000

Dynasafe has had extensive experience with the SDC2000 model in Germany and Taiwan. The feed system of the SDC2000 at Münster, Germany, was too small to accommodate the long rocket motors, but the vendor says the feed system can be enlarged if a new system is built for BGCAPP. In addition, the NEW limit for the SDC2000 system at Münster is limited by permit to 2.3 kg, which is one-fourth of the NEW of the rocket motor. It was therefore not possible to conduct testing using a whole rocket motor. For a new system constructed for BGCAPP, Dynasafe claims the NEW limit can be up to 10 kg depending on the choice of an inner chamber design specification. This is just sufficient to withstand the unexpected detonation of a single rocket motor with its 19.3 lb (8.8 kg) of propellant. Additional testing would be needed before this technology could be selected for Requirement BG-1.

The Dynasafe technology has not yet been given a permit to destroy chemical weapons in the United States. The system appears to be robust and reliable. The throughput rate expected by the vendor for the SDC2000 is high, 10 motors per hour. The committee projects a campaign length from about 2.2 years to about 4.5 years. The SDC, which is rated highly for safety, involves minimal handling of the munition and no handling of donor explosives.

Secondary waste production is moderate. The aqueous scrubbers would produce no liquid effluents but would produce up to 500 lb per day of salts as a filter cake. The

Copyright © National Academy of Sciences. All rights reserved.

rocket motors contain lead, and the salts resulting from rocket motor processing could be hazardous for that reason. The scrap metal can be released for unrestricted use.

Overall Ratings for Requirement BG-1

The high throughput D-100 static firing system is clearly the most satisfactory EDT to satisfy Requirement BG-1. The summed rating for the D-100 unit is 54 out of a possible 70. The DAVINCH DV65 and the Dynasafe SDC2000 are rated equally at 46. The DV65 and the SDC2000 have not been permitted or operated in the United States, and their throughput rate is not as good as that of the D-100.

Finding 4-2. The CH2M HILL D-100 detonation chamber for conventional munitions, using static firing of the rocket motors, is best suited for Requirement BG-1. The DAVINCH DV65 and the Dynasafe SDC2000 are acceptable second choices.

Recommendation 4-2. For Requirement BG-1, if testing is successful, the Army should use the CH2M HILL D-100 detonation chamber at BGAD, with static firing of the rocket motors. The Army should consider the Dynasafe SDC2000 and the DAVINCH DV65 as acceptable second choices.

REQUIREMENT BG-2: DESTRUCTION OF APPROXIMATELY 15,000 MUSTARD AGENT H-FILLED 155-MM PROJECTILES AT BLUE GRASS

Implementation of Requirement BG-2 would allow an EDT to process the entire number of mustard agent H munitions stored at BGAD in parallel with the processing of VX- and GB-filled projectiles and rockets through the main process of the BGCAPP. This would reduce the overall BGAD schedule by 8 months. Although the EDS technology has proven its ability to process the type of munitions that are associated with Requirement BG-2, its low processing rate would require a very long period of operation. The EDS was therefore eliminated from further consideration for Requirement BG-2.

TDC

The TC-60 TDC technology and other models of CH2M HILL's TDC technology have been used extensively for the destruction of chemical weapons. However, the TC-60 TDC has never destroyed 155-mm projectiles filled with mustard agent. In a 2008 campaign at Schofield Barracks in Hawaii, 38 phosgene-filled 155-mm projectiles were destroyed. One projectile was destroyed per detonation. The operations in Hawaii experienced various mechanical and electrical problems. These problems were being corrected as this report was being written.

TC-60 TDC operations at Porton Down showed that one detonation every 35 minutes is possible. A 35-minute cycle would correspond to 17 detonations per 10-hour

Copyright © National Academy of Sciences. All rights reserved.

Assessment of Explosive Destruction Technologies for Specific Munitions at the Blue Grass and Pueblo Chemical Agent Destruction Pilot Plants
http://www.nap.edu/catalog/12482.html

shift. At this rate, 882 days of operation (2.83 years) would be required to destroy the 15,000 projectiles. The committee thus projected a campaign that would last about 2.8 years to about 5.7 years.

The TC-60 TDC has been permitted and operated in the United States to destroy chemical weapons. When obtaining the permits for operation of the TC-60 TDC in Hawaii, no public opposition was experienced. The TC-60 TDC has also been through the DDESB approval process. This will be of benefit in obtaining future DDESB approvals.

The TC-60 TDC produces moderate amounts of secondary waste, which might or might not contain contaminants at concentrations of regulatory concern. The scrap metal is thermally decontaminated (to ≤1VSL)[4] before it is removed from the detonation chamber.

The destruction efficiency (DE) for mustard agent is ≥99.9999 percent. The system is transportable, which is a significant advantage.

DAVINCH

DAVINCH is a mature technology for chemical agent destruction but has not as yet been demonstrated in the United States. Although it has not been used to destroy mustard agent-filled 155-mm projectiles, it should be able to do so. The DAVINCH DV65 is capable of destroying two 155-mm projectiles per shot for nine shots per 10-hr day. At this throughput of 18 projectiles per day, it would take 834 days, or 139 6-day weeks (2.7 years), to destroy the 15,000 mustard agent H-filled projectiles at BGAD. The committee projected a campaign length ranging from about 2.7 years to about 5.3 years.

The DAVINCH technology has not been permitted or received DDESB approval for an application in the United States.

When processing 155-mm mustard agent H projectiles, several waste streams will be produced. The metal parts will have been heat treated in the vessel to a point where they can be released or recycled. Following treatment in the cold plasma oxidizer, the process offgas enters a retention tank for testing. If the quantity of agent in the offgas is >1 VSL, it is recycled through the DAVINCH vessel and the cold plasma oxidizer for further treatment. The volumes of each waste stream from the processing of 155-mm projectiles are not known but are expected to be small unless there is a large volume of liquid wastes. DEs are sufficiently high. The system is not transportable.

---

[4]Vapor screening levels (VSLs) are based on the airborne exposure limits (AELs) that have been established by the Centers for Disease Control and Prevention and vary depending on the agent. For mustard agent, 1 VSL is equal to 0.003 mg/m^3. This use of VSLs has replaced an earlier system used by the Army to characterize the degree of agent decontamination. That system was based on procedural methods and used values of 1X, 3X, and 5X, the latter indicating complete decontamination. The 3X classification is analogous to a determination of ≤1VSL. The VSL system will be used throughout this report to indicate the level of mustard agent decontamination.

Copyright © National Academy of Sciences. All rights reserved.

SDC2000

The Dynasafe static detonation chamber (SDC2000) is a mature technology for destruction of the type of chemical weapon in Requirement BG-2. As indicated in Chapter 4**,** over 13,000 recovered munitions were destroyed at the Münster, Germany, facility. The technology has not been demonstrated in the United States and Dynasafe has not designed, built, or tested the air pollution control system proposed for use in the United States. However, the committee was confident that Dynasafe AB will be able to provide an air pollution control system that removes agent to below detection levels. The system is not transportable.

According to Tables 4-7 and 4-8 in Appendix A, the Dynasafe SDC2000 can destroy two 155-mm projectiles per cycle and can conduct two cycles per hour. The committee has projected a campaign lasting from about 1.6 years to about 3.2 years.

The SDC2000 is rated highly for safety. Once the munitions have been transported to the Dynasafe SDC2000, the processing is automatic and no external explosives need to be attached. This minimizes the exposure of the operators to explosives.

The Dynasafe SDC2000 has not been permitted in the United States to destroy chemical weapons.

The acidic and basic scrubbers would produce no liquid effluents but would produce up to 500 lb per day of salts as a filter cake.

Overall Ratings for Requirement BG-2

The overall ratings are shown in Table S-2. The TC-60 TDC received a summed rating of 53 out of a possible 70. The DAVINCH DV65 and the Dynasafe SDC2000 received summed ratings of 59 and 58, respectively. Thus, the Army should give preference to the DAVINCH DV-65 and the Dynasafe SDC2000 for this requirement. The TC-60 TDC is also acceptable, however.

Finding 4-3. The DAVINCH DV65 and the Dynasafe SDC2000 are rated approximately equally and slightly higher than the TC-60 TDC for Requirement BG-2.

Recommendation 4-3. The Army should give preference to the use of the DAVINCH DV65 or the Dynasafe SDC2000 for Requirement BG-2, the destruction of 15,000 mustard-filled projectiles at BGCAPP. The TC-60 TDC is rated lower but would also be acceptable.

Copyright © National Academy of Sciences. All rights reserved.

REQUIREMENT BG-3: DESTRUCTION OF APPROXIMATELY 70,000 NONCONTAMINATED M55 ROCKET MOTORS AND 15,000 MUSTARD AGENT H-FILLED 155-MM PROJECTILES AT BLUE GRASS

Requirement BG-3 is the combination of Requirements BG-1 and BG-2, and the preceding evaluation discussions for BG-1 and BG-2 apply. For this requirement, a combination of two CH2M HILL technologies was considered. The D-100 would be used for the destruction of the noncontaminated M55 rocket motors, and the TC-60 TDC would be used for destruction of the mustard agent-filled projectiles. This combination of systems from CH2M HILL was compared with single systems from other vendors for Requirement BG-3. It is expected that ACWA will be able to consider the committee's evaluations and recommendations for Requirements BG-1 (noncontaminated rocket motors only) and BG-2 (mustard agent projectiles only) and come to its own conclusions on the use of such combinations. The projected campaign length ranges for the EDTs that can accomplish Requirement BG-3 are as follows:

- D-100 and TC-60 TDC combination: a range of 2.8 to 5.6 years if the two campaigns are done in parallel or 4.1 to 8.2 years if they are done sequentially.
- DAVINCH DV65: 8.9 to 17.8 years
- SDC2000: 3.8 to 7.7 years

Overall Ratings for Requirement BG-3

The overall ratings are shown in Table S-3. The summed rating for the D-100 and TC-60 combination is 62 out of a possible 80, the summed rating for the SDC2000 is 66, and the summed rating for the DAVINCH DV65 is 65. The EDS is not suitable for Requirement BG-3. Thus, the D-100 and TC-60 TDC combination, the DAVINCH DV65, and the SDC2000 are rated about the same, and all are viable candidates.

Finding 4-4. The CH2M HILL D-100 and TC-60 TDC combination, the DAVINCH DV65, and the Dynasafe SDC2000 technologies are rated approximately the same and are all acceptable candidates for Requirement BG-3, although the time needed for use of a single DV65 operating 60 hours per week might be considered excessively long by the Army. All will require testing or further testing before a final selection can be made.

Recommendation 4-4. If the results of testing on rocket motor destruction are favorable for all of the explosive destruction technologies suitable to this task, the Army could use either the CH2M HILL D-100 and TC-60 TDC combination, the DAVINCH DV65, or the Dynasafe SDC2000 technology for Requirement BG-3. The campaign length for use of a single DV65 operating at 60 hours per week might be considered excessively long by the Army.

Copyright © National Academy of Sciences. All rights reserved.

REQUIREMENT P-1: DESTRUCTION OF ALL LEAKERS AND REJECT MUNITIONS AT PUEBLO COMPRISING APPROXIMATELY 1,000 ROUNDS OF A MUSTARD AGENT HD/HT-FILLED MIXTURE OF 4.2-in. MORTARS AND 105- AND 155-mm PROJECTILES

Table 1-3 lists the overpacked munitions currently stored at PCD. Most are 105-mm and 155-mm HD- or HT-filled projectiles. This list is expected to grow to about 1,000 munitions as destruction of munitions proceeds in the main processing unit. These munitions will be overpacked. Processing them in an EDT will significantly shorten the schedule and reduce risk to the operating staff by minimizing the need for intermediate storage with multiple handling requirements.

EDS

The EDS is a mature technology for chemical agent destruction and has been demonstrated in the United States. It has been shown to be capable of processing the types of munitions that are associated with Requirement P-1. Agent is destroyed to acceptable levels. The system is transportable.

The EDS-2 has a relatively low throughput of one 155-mm projectile every 2 days but can destroy six 4.2-in. mortars in the same period. The committee projects a campaign length of about 2.9 years to about 5.7 years. Two EDS-2s could complete the mission in about 1.4 to about 2.9 years.

The EDS has been permitted in the United States and has not drawn any notable public opposition to its use at a number of different locations.

The EDS-2 produces a relatively large volume of secondary waste in liquid form, 8-10 gallons per detonation. This is a disadvantage vis-à-vis the other technologies. The EDS has a hold-test-release capability for the liquid waste to assure that agent destruction has been completed before the waste is released from the unit and passed to storage.

T-60 TDC, DAVINCH DV65, and SDC2000

For these three vendor-supplied technologies, the discussions on evaluation factors for Requirement BG-2 apply. Campaign lengths projected by the committee would be relatively short:

TC-60 TDC: about 10 weeks to about 20 weeks
DAVINCH DV65: about 5 weeks to about 10 weeks
SDC2000: about 2 weeks to about 4 weeks

Summary Finding and Recommendation for Requirement P-1

Table S-4 presents the overall ratings for Requirement P-1. The EDS has the highest summed rating, 73 out of a possible 80. The DAVINCH DV65 is second and is

Copyright © National Academy of Sciences. All rights reserved.

very close to the EDS at 71. The Dynasafe SDC2000 follows at 68, and the TC-60 TDC is at 65.

Finding 4-5. The EDS-2 is well suited for Requirement P-1. It has an advantage over the other three systems with respect to maturity. Its hold-test-release feature is an advantage. The DAVINCH DV65 is a close second choice. The Dynasafe SDC2000 the TC-60 TDC are also acceptable choices.

Recommendation 4-5. For Requirement P-1, the Army should use one or more EDS-2 units or the DAVINCH DV65 technology. The Dynasafe SDC2000 and the TC-60 TDC are also acceptable choices.

Copyright © National Academy of Sciences. All rights reserved.

TABLE S-1 EDT Ratings Summary for Requirement BG-1, Destruction of Approximately 70,000 Noncontaminated M55 Rocket Motors at Blue Grass

	Evaluation Factor								
EDT Technology	Process Maturity	Process Efficacy	Process Throughput	Process Safety	Public and Regulatory Acceptability in a U.S. Context	Secondary Waste Issues	Destruction Verification Capability	Process Flexibility	Total
D-100	8	9	10	8	10	9	N/A	N/A	54
DAVINCH DV65	8	9	5	8	7	9	N/A	N/A	46
SDC2000	6	9	8	9	7	7	N/A	N/A	46

NOTE: The above values for each evaluation factor are the average of each committee member's rating on a scale of 0-10. These average values were then summed to arrive at the totals given in the last column. Small differences in the summed ratings, up to about five points, were not considered to be significant by the committee. There was no weighting.

Copyright © National Academy of Sciences. All rights reserved.

TABLE S-2 EDT Ratings Summary for Requirement BG-2, Destruction of 15,000 Mustard Agent H 155-mm Projectiles at Blue Grass

	Evaluation Factor								
EDT Technology	Process Maturity	Process Efficacy	Process Throughput	Process Safety	Public and Regulatory Acceptability in a U.S. Context	Secondary Waste Issues	Destruction Verification Capability	Process Flexibility	Total
TC-60 TDC	8	4	8	7	9	8	9	N/A	53
DAVINCH DV65	8	9	8	8	7	9	10	N/A	59
SDC2000	7	9	10	9	7	7	9	N/A	58

NOTE: The above values for each evaluation factor are the average of each committee member's rating on a scale of 0-10. These average values were then summed to arrive at the totals given in the last column. Small differences in the summed ratings, up to about five points, were not considered to be significant by the committee. There was no weighting.

Copyright © National Academy of Sciences. All rights reserved.

TABLE S-3 EDT Ratings Summary for Requirement BG-3, Destruction of Approximately 70,000 Noncontaminated M55 Rocket Motors and 15,000 Mustard Agent H 155-mm Projectiles at Blue Grass

	Evaluation Factor								
EDT Technology	Process Maturity	Process Efficacy	Process Throughput	Process Safety	Public and Regulatory Acceptability in a U.S. Context	Secondary Waste Issues	Destruction Verification Capability	Process Flexibility	Total
D-100 and TC-60 TDC combination	6	7	8	7	9	8	8	9	62
DAVINCH DV65	8	9	5	8	7	9	10	9	65
SDC2000	7	9	9	9	7	7	9	9	66

NOTE: The above values for each evaluation factor are the average of each committee member's rating on a scale of 0-10. These average values were then summed to arrive at the totals given in the last column. Small differences in the summed ratings, up to about five points, were not considered to be significant by the committee. There was no weighting.

Copyright © National Academy of Sciences. All rights reserved.

TABLE S-4 EDT Ratings Summary for Requirement P-1, Destruction of All Leakers and Reject Munitions at Pueblo Comprising Approximately 1,000 Rounds of a Mustard Agent HD/HT-Filled Mixture of 4.2-in. Mortars and 105- and 155-mm Projectiles

	Evaluation Factor								
EDT Technology	Process Maturity	Process Efficacy	Process Throughput	Process Safety	Public and Regulatory Acceptability in a U.S. Context	Secondary Waste Issues	Destruction Verification Capability	Process Flexibility	Total
TC-60 TDC	8	4	10	7	9	8	9	10	65
DAVINCH DV65	8	9	10	8	7	9	10	10	71
SDC2000	7	9	10	9	7	7	9	10	68
EDS[a]	10	10	10	7	10	6	10	10	73

NOTE: The above values for each evaluation factor are the average of each committee member's rating on a scale of 0-10. These average values were then summed to arrive at the totals given in the last column. Small differences in the summed ratings, up to about five points, were not considered to be significant by the committee. There was no weighting.

[a] These ratings are based on the use of two EDS-2 units.

Copyright © National Academy of Sciences. All rights reserved.

Copyright © National Academy of Sciences. All rights reserved.

Assessment of Explosive Destruction Technologies for Specific Munitions at the Blue Grass and Pueblo Chemical Agent Destruction Pilot Plants
http://www.nap.edu/catalog/12482.html

1
Introduction

PURPOSE OF THIS REPORT

The Committee to Review Assembled Chemical Weapons Alternatives (ACWA) Program Detonation Technologies (known, for short, as the ACWA Detonation Technologies Committee) was appointed by the National Research Council (NRC) in response to a request by the U.S. Army's Program Manager for Assembled Chemical Weapons Alternatives (PMACWA). Three detonation technologies available from technology vendors and the Army's own explosive destruction system (EDS), collectively known as explosive destruction technologies (EDTs), are being considered for the destruction of some of the chemical weapons now stored at the Blue Grass Army Depot (BGAD) in Richmond, Kentucky, and the Pueblo Chemical Depot (PCD) in Pueblo, Colorado. In addition, two of these vendor-supplied EDTs and another EDT suitable only for treating conventional munitions, the CH2M HILL D-100, are being considered for the destruction of all the M55 rocket motors at BGAD not contaminated with chemical agent. The EDTs are being considered as supplemental technologies for destroying these weapons in order to improve operational safety and to accelerate the overall weapon destruction schedule of the main chemical agent destruction pilot plant facilities—the Blue Grass Chemical Agent Pilot Plant (BGCAPP) and the Pueblo Chemical Agent Pilot Plant (PCAPP)—being designed and constructed at the Blue Grass and Pueblo sites under the ACWA program.

The vendor-supplied EDTs under consideration to supplement the pilot plant processes are detonation of ammunition in a vacuum integrated chamber (the DAVINCH) from Kobe Steel, Ltd., under the corporate mark KOBELCO; transportable detonation chamber (TDC), formerly known as the controlled detonation chamber (CDC), from CH2M HILL; the D-100 technology for destruction of conventional weapons, also from CH2M HILL; and the Dynasafe SDC2000 static detonation chamber, formerly known as the Dynasafe static kiln. In the present report, the committee updates its presentation of the four types of EDTs (TDC, SDC, DAVINCH, and EDS) from the 2006 report *Review of International Technologies for Destruction of Recovered Chemical Warfare Material* (the International Technologies report, for short), evaluated and rated the four EDTs plus the CH2M HILL D-100 with respect to the requirements at the Blue Grass and Pueblo sites, and recommended EDTs for each of the requirements described in the following section (NRC, 2006).

Copyright © National Academy of Sciences. All rights reserved.

Assessment of Explosive Destruction Technologies for Specific Munitions at the Blue Grass and Pueblo Chemical Agent Destruction Pilot Plants
http://www.nap.edu/catalog/12482.html

REQUIREMENTS FOR USE OF EXPLOSIVE DESTRUCTION TECHNOLOGIES AT ACWA SITES

The possibilities for using EDTs at the Blue Grass and Pueblo sites were presented to the committee in the form of requirements.

Requirements for the Blue Grass Site

The three requirements involving use of EDTs at the Blue Grass site are as follows:

- Requirement BG-1 is for the processing of about 70,000 M55 rocket motors at Blue Grass that are not contaminated with agent. Current plans call for shipment of these noncontaminated rocket motors to an off-site location for processing; destruction in an EDT is being considered as an alternative.
- Requirement BG-2 is for the destruction of all 155-mm mustard agent H projectiles at Blue Grass.
- Requirement BG-3 is for doing both of the above.

At the present time, EDTs are not in the overall design plans for destroying the BGAD chemical stockpile through the BGCAPP. However, the three requirements given above have been defined for their possible use at the Blue Grass site.

Requirement BG-1 is the onsite processing of approximately 70,000 noncontaminated rocket motors. Rocket motors that are contaminated with agent are not considered under this requirement. Current plans call for shipping the noncontaminated rocket motors to an off-site facility for processing. However, the Army is considering destruction in an EDT at Blue Grass as an alternative. This approach would minimize the handling and transportation of these energetic-filled motors. Under current plans the shipping and firing tube (SFT) segments associated with the rocket motors would have to be removed from the motors and shipped to an off-site treatment, storage, and disposal facility (TSDF) that meets Toxic Substances Control Act (TSCA) requirements because the tubes contain high enough levels of polychlorinated biphenyls to be of regulatory concern.

Requirement BG-2 concerns the processing of approximately 15,000 mustard agent H 155-mm projectiles in one or more EDTs. The current operational strategy for BGCAPP is to process these projectiles after the rockets have been processed. At the end of the processing campaign for each agent type, essentially all of the agent monitors have to be changed from the previous agent type to the new agent type. Changing includes testing to ensure proper operation. In addition, when changing from one munitions type to another—for example, from 155-mm projectiles to 4.2-in. mortars—the munitions handling equipment has to be adjusted. The primary reason for processing mustard agent

Copyright © National Academy of Sciences. All rights reserved.

Assessment of Explosive Destruction Technologies for Specific Munitions at the Blue Grass and Pueblo Chemical Agent Destruction Pilot Plants
http://www.nap.edu/catalog/12482.html

H munitions in one or more EDTs is that it would save approximately 8 months in the overall schedule for BGCAPP operations.[1]

Requirement BG-3, which combines requirements BG-1 and BG-2, would have the advantages of both. With one exception, the committee considered the use of a single EDT system to destroy both the noncontaminated rocket motors and the mustard agent-filled 155-mm projectiles at BGAD. The exception is the evaluation of the combination of the two CH2M HILL technologies, the D-100 for the noncontaminated rocket motors and the TC-60 TDC for the 155-mm mustard agent-filled projectiles. This evaluation was done with the concurrence of the ACWA program.[2]

Requirement for the Pueblo Site

The single requirement involving use of EDTs at the Pueblo site is as follows:

- Requirement P-1. Destruction of all leakers and reject munitions at Pueblo. About 1,000 mustard-agent-filled munitions—a mixture of 4.2-in. mortars, 105-mm projectiles, and 155-mm projectiles—would be destroyed.

The current process description for the PCAPP includes the use of an as-yet-unspecified EDT for the destruction of an estimated 1,000 leaker or reject projectiles containing distilled (sulfur) mustard agent (HD) or distilled mustard mixed with bis[2-(2-chloroethylthio) ethyl] ether (HT). This description is called Requirement P-1.

ASSEMBLED CHEMICAL WEAPONS ALTERNATIVES PROGRAM

Background

In 1997, Congress passed legislation that requires the Army to pursue alternatives to incineration for the destruction of assembled chemical weapons at two of the U.S. sites where chemical weapons have been stockpiled: the PCD, in Pueblo, Colorado, and the BGAD, in Richmond, Kentucky.[3] The destruction of chemical weapons at these two facilities is being carried out under the ACWA program, which is headquartered at the Edgewood Area of Aberdeen Proving Ground, Maryland. The initial mission of the ACWA program was to test and demonstrate technological alternatives to incineration for the demilitarization of assembled chemical weapons. “Assembled” chemical weapons refers to weapons that have fuzes, explosives, propellant, chemical agents, and SFTs and/or packaging materials that need to be destroyed.

The pilot plants at BGAD and PCD rely mainly on weapon disassembly to access agent and energetics. This is followed by the primary treatment process of hydrolysis

---

[1]Question-and-answer session with Joseph Novad, Deputy Operations and Engineering Manager, ACWA, and the committee, May 28, 2008.

[2]Personal communication between Joseph Novad, Deputy Operations and Engineering Manager, ACWA, and Richard Ayen, committee chair, September 23, 2008.

[3]For additional information, see www.pmacwa.army.mil.

Copyright © National Academy of Sciences. All rights reserved.

Assessment of Explosive Destruction Technologies for Specific Munitions at the Blue Grass and Pueblo Chemical Agent Destruction Pilot Plants
http://www.nap.edu/catalog/12482.html

(neutralization) of the agent and energetics using hot water or a caustic solution and subsequent secondary waste treatment. The Bechtel Parsons Blue Grass Team (BPBGT), a joint venture formed by Bechtel National, Inc., and Parsons Engineering, was awarded a contract in June 2003 to design, construct, test, operate, and close the destruction facility for the BGAD stockpile, BGCAPP. For destruction of the PCD stockpile, Bechtel National, Inc., was awarded a contract in September 2002 to design, construct, systemize, pilot test, operate, and close PCAPP.

The weapons to be destroyed at BGAD contain three different chemical warfare agent fills: nerve agents GB and VX and the H form of mustard agent, known also as Levinstein mustard. The depot stores 523 tons of agent in rockets and projectiles. The chemical weapons at PCD contain only mustard agent in the HD and HT forms.[4] This depot stores 2,611 tons of agent in mortars, projectiles, and cartridges.

BGCAPP Process Description

The stockpile at BGAD consists of approximately 70,000 rockets containing either GB or VX and approximately 32,000 projectiles containing either H, GB or VX. Neither the GB nor the VX projectiles at BGAD contain bursters. Table 1-1 provides a more detailed description of the munitions. All munitions are stored on pallets in igloos (rockets are inside their SFTs), and the igloos are monitored to detect any leakers. The leakers are stored in overpacks and are treated separately from the remaining munitions. The stored munitions are delivered from the BGAD storage igloos to the BGCAPP unpack area, where they are monitored to determine if any have leaked during transport or unpacking. PMACWA estimates that there will be no more than 200 leaking rockets, all containing GB. A similar number of leaker and reject projectiles containing either mustard agent H or GB can be expected.[5] Tables 1-1 and 1-2 provide information on overpacks.

Figure 1-1 shows the main processing operations to be used at BGCAPP. This diagram does not show the secondary waste streams from the various operations.

Processing of Projectiles

After being unpacked from the pallets, the projectiles are conveyed to the linear projectile/mortar disassembly (LPMD) machine, where the nose plug is first removed. For H projectiles, the burster is removed from the burster well. The empty burster well is then sampled to determine if agent leakage has occurred; if not, the burster is sent to an

---

[4]Mustard agent is a blistering agent. The active ingredient in the H, HD, and HT forms of mustard agent is bis(2-chloroethyl) sulfide, or $(ClCH_2CH_2)_2S$. HD, called distilled mustard, is nominally pure mustard agent. HT is prepared by a chemical process that synthesizes the HT directly in such a way that it contains 20 to 40 weight percent agent T, bis[2-(2-chloroethylthio) ethyl] ether ether, in addition to the HD component. HT has a lower freezing point than pure HD. H, often called Levinstein mustard, was approximately 70 percent pure mustard agent and 30 percent impurities at the time of manufacture. However, the stored H mustard agent has deteriorated over time, and its physical properties are highly variable. H is the only form of mustard agent stored at Blue Grass Army Depot.

[5]Reject munitions are those that have presented or might present difficult issues for disassembly during normal operations.

Copyright © National Academy of Sciences. All rights reserved.

Assessment of Explosive Destruction Technologies for Specific Munitions at the Blue Grass and Pueblo Chemical Agent Destruction Pilot Plants
http://www.nap.edu/catalog/12482.html

energetics batch hydrolyzer (EBH). If a leak has occurred or if the LPMD is unable to process the projectile (in which case it is considered a reject), the projectile is overpacked and returned to the storage igloos for later treatment. If not leaking, the projectile burster well is buckled to provide access to the agent, which is sent to the agent neutralization system (ANS). The metal parts are sent to the metal parts treater (MPT) for decontamination prior to their release to a public-sector facility for recycling. Decontamination is accomplished by heating the materials to 1000°F for at least 15 minutes. Induction heaters and superheated steam are the heating mechanisms. The MPT offgas passes to the MPT offgas treatment system consisting of a bulk oxidizer, a cyclone, a venturi scrubber, a particulate filter, and a heater to lower the relative humidity. The offgas effluent is then passed through activated carbon adsorbers.

In the agent neutralization system (ANS), the agent is hydrolyzed with a hot caustic solution for VX and GB and with hot water for mustard agent H. The EBH offgas treatment system is similar to the MPT offgas treatment system except that it does not have a bulk oxidizer. The BGCAPP design incorporates supercritical water oxidation (SCWO) treatment for hydrolysates of agent and energetics, although PMACWA continues to investigate off-site shipment options.[6] SCWO subjects the hydrolysate to high temperatures and pressures (approximately 1200°F and 3,400 psig), converting the organic compounds to carbon dioxide, water, and salts.

Processing of Rockets

After being unpacked from the pallets, the individual rockets are conveyed to the rocket cutting machine (RCM), where the rockets are cut while still in their SFTs. The cut is indexed so that the rocket motor (including the igniter) is separated from the warhead, which still contains the agent. A leaking rocket could be detected when monitoring for agent at the RCM. Uncontaminated rocket motors, still inside the lower sections of the SFTs, are to be sent off-site for processing or processed on-site by an EDT. The rocket warhead is separated from the upper section of the SFT, punched, drained of agent, and the agent is sent to the ANS. The aluminum warhead, still containing the burster, is sheared into segments. The segments (and any contaminated rocket motors) are conveyed to the EBHs. The upper section of the SFT, if uncontaminated with agent, will be sent off-site for processing.

As presently configured, the hydrolysis product from the agent neutralization processing step at BGCAPP, termed hydrolysate, will undergo secondary treatment by SCWO to further reduce its toxicity. Metal parts are subjected to high-pressure water washout and thermal treatment by heating to 1000°F for at least 15 minutes to allow unrestricted release and possibly recycling. Gas effluents are filtered through a series of high-efficiency particulate air (HEPA) filters and activated carbon adsorbers before being released to the atmosphere. Water is recycled.

[6]Ray Malecki, Blue Grass Project Engineer, ACWA, "Assembled Chemical Weapons Alternatives (ACWA) program: ACWA overview," presentation to the committee, May 7, 2008.

Copyright © National Academy of Sciences. All rights reserved.

Assessment of Explosive Destruction Technologies for Specific Munitions at the Blue Grass and Pueblo Chemical Agent Destruction Pilot Plants
http://www.nap.edu/catalog/12482.html

PCAPP Process Description

The stockpile at PCD consists of approximately 780,000 projectiles (105- and 155-mm and mortar rounds (4.2-in.) These munitions (and overpacked explosive components) include all of the types shown in Table 1-3. The agent fill is HD except for some of the mortar rounds containing HT. Some 105-mm projectiles have been reconfigured to remove the propellant and fuze but keep the burster and nose plug. Unreconfigured 105-mm projectiles with integral fuzes and bursters are contained in sealed tubes with bags of propellant, two tubes to a box. All of the 155-mm projectiles have been reconfigured to contain lifting plug and burster but no fuze. The 4.2-in. mortars with integral fuze, burster, propellant wafers, and ignition cartridge are contained in sealed tubes, two tubes to a box. Table 1-3 provides additional details of the munitions and their fills. Figure 1-2 shows the main operations of the process for PCAPP and the relationship of the EDT to these main operations. Again, secondary waste streams are not shown.

The stored munitions are delivered from the PCD storage igloos to the PCAPP unpack area, where the munitions are monitored to determine if any have leaked during transport. Monitoring also occurs during unpacking. New leakers, if any, are overpacked and returned to the storage igloos. There are 537 known overpacked munitions or explosive components at PCD, and PMACWA projects that the total number of overpacked munitions/explosive components will be about 1,000.[7]

After being unpacked, the munitions are conveyed to the linear projectile/mortar disassembly (LPMD) machine, where nose plugs, fuzes, boosters, and bursters are removed. The empty burster well is sampled to determine if a leak has occurred; if not, the bursters and fuzes will be removed and shipped off-site to a commercial toxic substances disposal facility (TSDF). If a leak has occurred in the burster well, or if the LPMD machine is unable to process the projectile, (in which case it is considered as a reject), the munition is overpacked for treatment by the EDT.

If not leaking, an empty projectile burster well is buckled with a hydraulic ram to provide access to the agent; in the case of a mortar, its base is cut. Mustard agent is drained from the weapons, and the agent cavity of each munition is washed with high-pressure water. Agent is sent to the ANS. The casing and nose plugs are sent to the metal treatment unit (MTU) for decontamination prior to unrestricted release to a public-sector facility for possible recycling. Decontamination is accomplished by heating the materials to 1000°F for at least 15 minutes. Electrical resistance heaters externally heat the muffle walls, which in turn radiate heat to the munitions parts. The MTU offgas passes to the offgas treatment system, consisting of a bulk oxidizer, a venturi scrubber, a particulate filter, and a heater to lower the relative humidity. The effluent is passed through activated carbon adsorbers.

In the ANS, the mustard agent is hydrolyzed with hot water and the hydrolysate pH is adjusted with caustic solution. The PCAPP design incorporates six immobilized cell bioreactors (ICBs) for the treatment of agent hydrolysate, although PMACWA

[7]Question-and-answer session with Joseph Novad, Deputy Operations and Engineering Manager, ACWA, and the committee, May 28, 2008.

Copyright © National Academy of Sciences. All rights reserved.

Assessment of Explosive Destruction Technologies for Specific Munitions at the Blue Grass and Pueblo Chemical Agent Destruction Pilot Plants
http://www.nap.edu/catalog/12482.html

continues to investigate off-site shipment options.[8] The water stream from biotreatment is recycled, and the biosludge is sent to an off-site permitted disposal facility.

TYPES OF EXPLOSIVE DESTRUCTION TECHNOLOGIES

Four of the EDTs addressed in this report were described and evaluated in *Review of International Technologies for Destruction of Recovered Chemical Warfare Materiel*, often referred to as the International Technologies report (NRC, 2006). Since the publication of that report in 2006, these technologies—the controlled detonation chamber (CDC), the DAVINCH, the Dynasafe static kiln, and the Army's EDS—have been used to destroy a variety of chemical munitions, in some cases having undergone evolutionary changes with their design and operation. The CDC has since been renamed and is now called the transportable detonation chamber (TDC). The Dynasafe static kiln has become the Dynasafe static detonation chamber (SDC). The nontransportable D-100 detonation chamber (described below) was not included in the International Technologies report and is designed for treating only conventional munitions.

The statement of task for the committee describes the EDT systems reviewed in the International Technologies report as ". . .three detonation technologies and the EDS. . .". The committee's analysis of the EDT systems and EDS, however, indicates that evaluation of the four systems for destruction of chemical weapons can be facilitated by the understanding that they work on three basic principles:

1. *Detonation technology.* The DAVINCH and TDC systems destroy the vast majority of the agent and explosives in the munition by detonating donor explosives wrapped around the munition.
2. *Neutralization technology.* The EDS uses small explosive shaped-charges to open the munition and consume the explosive in the burster and fuze. The agent is destroyed by subsequent neutralization.
3. *Thermal destruction.* Dynasafe uses the heat of the electrically heated containment vessel (approximately 550°C-600°C) or the heat generated by previous detonations to open the munition and destroy the agent and then follow up with offgas treatment systems. Explosives in the munition will burn or detonate when they are exposed to the heat of the containment vessel. However, the burster and fuze do not need to be exploded or burned to access the agent and destroy it.

"Cold" Detonation" Versus "Hot" Detonation

A characteristic that distinguishes all of the EDTs discussed in this report from the integrated processes that will be used for BGCAPP and PCAPP is that the EDTs do not require disassembly of the munitions. Two of the vendor-supplied EDTs, namely the DAVINCH and the TDC, employ an explosive donor charge that is placed around the

[8]Ray Malecki, Blue Grass Project Engineer, ACWA, "Assembled Chemical Weapons Alternatives (ACWA) program: ACWA overview" presentation to the committee, May 7, 2008.

Copyright © National Academy of Sciences. All rights reserved.

Assessment of Explosive Destruction Technologies for Specific Munitions at the Blue Grass and Pueblo Chemical Agent Destruction Pilot Plants
http://www.nap.edu/catalog/12482.html

munition. The munition and its donor charge are placed in an explosive containment structure and the donor charge is detonated. The resulting temperature, pressure, and fireball destroy the agent and explosives. This type of process is called "cold" detonation because the chamber is at or near ambient temperature at the beginning of destruction operations. In the Dynasafe SDC, the munition is inserted into an already hot, externally heated chamber. The high temperature of the chamber results in the deflagration or detonation of the munition's explosive fill, if present, and destruction of the agent. This type of technology is called "hot" detonation. The EDS fits into neither of these categories; it employs explosive shaped charges to open a munition followed by use of neutralization chemicals to destroy the agent. Brief descriptions of all five EDTs follow. More complete descriptions of four of the EDTs are given in Appendix A, with the latest information given in Chapter 3.

CH2M HILL TC-60 TDC

The CH2M HILL TDC was originally developed in the United States, subsequently deployed for long-term operations in Belgium, and further refined through testing programs in the United Kingdom. Its three main components are a detonation chamber, an expansion chamber, and an emissions control system. A munition wrapped in explosive is mounted in the detonation chamber. The floor of the chamber is covered with pea gravel, which absorbs some of the blast energy. Bags containing water are suspended near the projectile to help absorb blast energy and to produce steam, which reacts with agent vapors. Oxygen is added when munitions containing mustard agent are destroyed. After the explosive is detonated, the gases are vented to the expansion chamber, then to the emissions control system. Systems with design capacities ranging from 12 lb of TNT-equivalent net explosive weight (NEW) (the T-10 model) to 60 lb of TNT-equivalent NEW (TC-60 model) have been constructed and operated. The latest versions incorporate a manually operated mechanical system to move the munitions and their donor charges from the preparation area and suspend them in the detonation chamber.

The offgas treatment system includes a reactive-bed filter system. Hydrated lime is fed into the offgas line upstream of a particle filtration system (DiBerardo et al., 2007). The offgas mixes with the lime, and the reactions between the acid gases and the lime to form salts begin. The lime, along with other particulate matter such as soot and pea gravel dust, accumulates on rigid ceramic candles within the filter to form a filter bed, and the reactions of the acid gases with the lime to form salts continue as the offgases pass through this bed. Lime is fed immediately before a detonation event and continues until the detonation and expansion chambers have been purged with ambient air. The accumulated reactive bed is periodically removed from the candles by applying a short burst of compressed air inside the filter. The solids drop to the bottom of the filter housing and are removed from the system. A catalytic oxidation (CATOX) unit oxidizes hydrogen, carbon monoxide, and organic vapors from the gas stream before it is vented through a carbon adsorption bed. The scrap metal that is removed periodically from the

Copyright © National Academy of Sciences. All rights reserved.

Assessment of Explosive Destruction Technologies for Specific Munitions at the Blue Grass and Pueblo Chemical Agent Destruction Pilot Plants
http://www.nap.edu/catalog/12482.html

detonation chamber meets the requirement to have a vapor screening level (VSL) of ≤1 VSL for agent.[9]

CH2M HILL D-100

CH2M HILL also offers a line of EDTs for conventional weapons. As indicated previously, one of these, the nontransportable D-100 detonation chamber, is being evaluated for destruction of the noncontaminated rocket motors at Blue Grass. A D-100 system has been installed at BGAD, and approval from the Department of Defense Explosives Safety Board (DDESB) has been obtained for 49.3 lb total explosives.[10] Permitting of this system to meet applicable regulations under the Resource Conservation and Recovery Act (RCRA) is under way.[11] BGAD has proposed a test program for BGCAPP to evaluate the technical feasibility of using this existing D-100 CDC system to destroy the rocket motors by static firing.[12] The test program would include the development of detailed operating procedures. The D-100 detonation chamber has internal dimensions of 14 ft wide × 16 ft high × 20 ft long. It is connected to a cylindrical expansion tank made of mild steel, 10 ft in diameter by 71 ft long. The air pollution control system consists of a cartridge-type particulate filter with pulsed jet cleaning, followed by an exhaust fan.

Before being processed, the rocket motors would be removed from their SFTs and their fins would be banded. Banding the fins prevents them from deploying when they are removed from the SFTs. This allows easier handling when mounting the rocket motors in the firing stand and, after firing, removing them from the stand. The motors would then be loaded into a static firing stand, the stand would be moved into the detonation chamber, and the firing wires would be connected. New igniters would be installed as necessary in the rocket motors. After the chamber door is closed, the rocket motors would be ignited. The door would then be opened and the chamber would be ventilated for 5 to 10 minutes. The firing stand would be removed and replaced with another firing stand freshly loaded with rocket motors.

---

[9]VSLs are based on the airborne exposures limits (AELs) that have been established by the Centers for Disease Control and Prevention and vary depending on the agent. For mustard agent, 1 VSL is equal to 0.003 mg/m^3. This use of VSLs replaces an earlier system used by the Army to indicate the degree of agent decontamination. That earlier system was based on procedural methods and values of 1X, 3X, and 5X, the latter indicating complete decontamination. The 3X classification is analogous to a determination of ≤1VSL. The VSL system will be used throughout this report to indicate the status of mustard agent decontamination.

[10]Personal communication between Brint Bixler, Vice President, CH2M HILL, and Richard Ayen, committee chair, July 23, 2008.

[11] BGAD is a storage site for conventional munitions in addition to chemical weapons and consequently must periodically dispose of conventional munitions that become outdated or defective.

[12]Personal communication between Brint Bixler, Vice President, CH2M HILL, and Margaret Novack, NRC, study director, July 10, 2008.

Copyright © National Academy of Sciences. All rights reserved.

DAVINCH

The DAVINCH technology was developed by Kobe Steel, Ltd., and has been used in Japan to destroy Japanese chemical bombs, some containing a mustard agent/lewisite mixture and others containing vomiting agents. A system was recently started up in Belgium to destroy recovered chemical munitions from the World War I era. The technology has not been used in the United States. It uses a detonation chamber in which chemical munitions and their contents are destroyed when donor charges wrapped around the munitions are detonated under a near vacuum. The use of vacuum reduces noise, vibration, and blast pressure, thus increasing the vessel life. Agent is destroyed by the high temperatures and pressures resulting from the detonation and by the fireball in the chamber. Offgases are produced that require secondary treatment. In Belgium, for example, they are oxidized in a cold plasma oxidizer and then passed through an activated carbon adsorber. The explosion containment capability of DAVINCH chambers varies from 45 to 65 kg TNT-equivalent NEW, depending on the application.

Dynasafe SDC2000

The Dynasafe SDC2000 static detonation chamber is manufactured by Dynasafe AB, a Swedish company. The detonation chamber has an explosion containment capability of 2.3 kg TNT-equivalent NEW and is a nearly spherical, armored, double-shelled, high-alloy stainless steel detonation chamber (heated retort) kept at between 550°C and 600°C (1022°F and 1112°F) (UXB International, 2007). This system has been in operation at the Gesellschaft zur Entsorgung Chemischen Kampfstoffe u. Rüstungs-Altlasten mbH (GEKA) site in Münster, Germany, and has been used to treat more than 13,000 recovered chemical weapons. According to the manufacturer, the access doors, loading chamber, and detonation chamber have been designed to withstand up to 10 kg TNT-equivalent NEW; however, the GEKA detonation chamber is permitted for only 2.3 kg TNT-equivalent NEW.

The detonation chamber can operate in a pyrolytic or oxidizing environment. Chemical munitions are placed in a cardboard or polypropylene box or carrier, which is transported to the top of the detonation chamber. The boxed munitions are fed into the detonation chamber through two offset loading chambers, each having its own door. The intact munitions are dropped onto a heated (550°C-600°C) bed of scrap metal, resulting in deflagration or detonation of the munition's explosive fill, if there is any. If there is no explosive fill, the heat of the chamber will cause the agent to vaporize, rupturing the munition casing and exposing the agent to thermal destruction. No explosive donor charge is used, nor is a reagent needed to neutralize the agent. If sufficient energy from energetics in the munition is released, no additional external heating from the electrical resistance elements is required. The offgas treatment system at GEKA includes a secondary combustion chamber, a fast quench system to minimize dioxin and furan formation, a three-stage scrubber system, a selective catalytic reduction system, and an adsorber/particulate filter system. The scrubber system generates liquid waste. The scrap metal that is removed periodically from the detonation chamber is acceptable for unrestricted release.

Copyright © National Academy of Sciences. All rights reserved.

Assessment of Explosive Destruction Technologies for Specific Munitions at the Blue Grass and Pueblo Chemical Agent Destruction Pilot Plants
http://www.nap.edu/catalog/12482.html

Explosive Destruction System (EDS)

At the heart of the EDS is an explosion containment vessel. The EDS Phase 1 (EDS-1) containment vessel has an inside diameter of 20 in. (51 cm), is 36 in. (91 cm) long, and can process up to 1.5 lb TNT-equivalent NEW. The EDS Phase 2 (EDS-2) containment vessel has an inside diameter of 28 in. (71 cm), is 56 in. (142 cm) long, and is designed to handle up to 4.8 lb TNT-equivalent NEW.

The EDS uses shaped explosive charges to access the agent cavity and destroy any energetics in the munition; this operation takes place in the sealed explosion containment vessel. After detonation of the shaped charges and opening of the munition, the appropriate neutralization reagents are pumped into the vessel and the vessel contents are heated and mixed until the treatment goal has been attained. After the contents of the chamber have been sampled and the concentration of chemical agent is shown to be below the treatment goal, the liquid waste solution is transferred out of the chamber into a waste drum. The drummed EDS liquid waste is normally treated further at a commercial hazardous waste TSDF. The EDS-2 generates 8 to 10 gallons of liquid waste per operating cycle. The scrap metal is ≤1VSL for agent.

STUDY SCOPE AND REPORT STRUCTURE

The committee's complete statement of task is set forth in the preface to this report. The committee's main responsibilities were twofold:

1. Update the earlier evaluation of the DAVINCH, CDC, Dynasafe static kiln technologies and the EDS and consider any other viable detonation technologies for the destruction of chemical munitions. The evaluations are to include process maturity, process efficacy, process throughput rate, process safety, public and regulatory acceptability, secondary waste issues, and destruction verification capability and process flexibility.
2. Obtain detailed information on the identified requirements involving prospective EDT usage at Pueblo and Blue Grass. Rank each of the three detonation technologies and the EDS with respect to satisfying these requirements and recommend a preferred technology.

During the study, the committee was also asked by PMACWA to include the committee's thoughts on design changes and upgrades that could allow the technologies to be better able to process a large number of rounds, on the order of 15,000, in a reasonable amount of time. This was to be done for the three vendor-supplied technologies but not the EDS. The committee was to specifically address reliability, maintainability, and capacity. However, an analysis of proprietary capital cost data was not part of the committee's task, nor did the committee have sufficient resources to predict other components of the life-cycle costs of the EDTs. Lastly, the committee did not separately assess the ACWA public involvement program for this report but did include public and regulatory acceptability among the evaluation criteria used. The

Copyright © National Academy of Sciences. All rights reserved.

overall public involvement program for ACWA was deemed outside the statement of task for this report (see Preface). The committee is aware, however, that the ACWA program has established strong relationships with local communities and national groups over the course of its existence for the purpose of pursuing meaningful involvement by interested members of the public.

The committee listened to briefings from the vendors of the DAVINCH, TDC, and Dynasafe technologies and from the U.S. Army on the EDS. Of special interest were improvements or changes to the technologies and testing or operational experience since the 2006 International Technologies report. The requirements at the Blue Grass and Pueblo sites were provided by the U.S. Army.

To carry out its charge, the committee held three meetings. The first was held at the National Academy of Sciences headquarters building in Washington, D.C., on May 7 and 8, 2008. Presentations were heard from the vendors of the Dynasafe and TDC technologies and from the Army on the EDS. The requirements for Blue Grass and Pueblo were discussed in a teleconference with PMACWA representatives. On May 12 and 13, 2008, between the first and second committee meetings, a member of the committee witnessed the TC-60 TDC in operation at Schofield Barracks in Hawaii. A teleconference involving committee members, Colorado regulators, and NRC staff took place between the first and second meetings, on May 22, 2008. A similar teleconference with Kentucky regulators was held on July 22, 2008, after the second meeting. The second meeting was held at the Keck Center in Washington, D.C., May 27 and 28, 2008. A presentation on the DAVINCH technology was received from Kobe Steel Ltd., and a presentation on the use of the TC-60 TDC at Schofield Barracks was received from the Army. The requirements for the EDTs were discussed further with PMACWA representatives. One member of the committee viewed equipment and participated in discussions on the operation of the DAVINCH DV50 at Poelkapelle, Belgium, and Dynasafe's SDC2000 at the GEKA facility in Münster, Germany, during site visits between August 3 and 7, 2008. The third meeting of the committee was held at the J. Erik Jonnson Center at Woods Hole, Massachusetts, August 25 and 27, 2008, and was focused on writing the report.

Chapter 2 discusses the evaluation factors to be employed in ranking the technologies against the requirements for Blue Grass and Pueblo. The evaluation factors were process maturity, process efficacy, process throughput rate, process safety, public and regulatory acceptability, secondary waste issues, destruction verification capability, and process flexibility.

Chapter 3 presents current information for each of the four EDTs on

- Changes to the technology since data gathering for the NRC International Technologies report was halted.
- Operating or testing experience gained in that same period of time.
- For technologies other than the EDS, the committee's thoughts on design changes and upgrades that would allow the technologies to be better able to process a large number (about 15,000) of rounds and that would improve reliability, maintainability, and capacity.

Copyright © National Academy of Sciences. All rights reserved.

Assessment of Explosive Destruction Technologies for Specific Munitions at the Blue Grass and Pueblo Chemical Agent Destruction Pilot Plants
http://www.nap.edu/catalog/12482.html

Chapter 3 also discusses regulatory approval and permitting for the various EDTs, including possible permitting options and other information obtained from Kentucky and Colorado regulators.

Chapter 4 provides summary evaluations of the EDTs against the requirements for Blue Grass and Pueblo and recommends (the use) of one or more technologies for each requirement.

Appendix A is a reprint of Chapter 4 from *Review of International Technologies for Destruction of Recovered Chemical Warfare Materiel* (NRC, 2006). It describes the various EDT technologies in detail. Appendix B lists committee meetings and site visits. Appendix C provides biographical sketches of the committee members.

REFERENCES

DiBerardo, R., T.A. Blades, and N. McFarlane. 2007. Demonstration/Validation of the TC-60 Controlled Detonation Chamber Porton Down, U.K., Final Demonstration Test Report, ECBC-SP-021, June. Aberdeen Proving Ground, Md.: Edgewood Chemical and Biological Center.

NRC (National Research Council). 2006. Review of International Technologies for Destruction of Recovered Chemical Warfare Materiel. Washington, D.C.: The National Academies Press.

NRC. 2008a. Review and Assessment of Developmental Issues Concerning the Metal Parts Treater Design for the Blue Grass Chemical Agent Destruction Pilot Plant. Washington, D.C.: The National Academies Press.

NRC. 2008b. Review of Secondary Waste Disposal Planning for the Blue Grass and Pueblo Chemical Agent Destruction Pilot Plants. Washington, D.C.: The National Academies Press.

UXB International Incorporated. 2007. Static Detonation Chamber Testing Using a Dynasafe SDC 2000, Final Report. Blacksburg, Va.: UXB International Incorporated.

Copyright © National Academy of Sciences. All rights reserved.

TABLE 1-1 Blue Grass Army Depot Chemical Weapons Inventory

Munition	Agent Fill	Total Quantity	Known to Be Leakers as of Mid-2008	Energetics	Type of Overpack
155-mm projectile	H	15,492	69	Tetrytol	M16 PCC[a]
8-in. projectile	GB	3,977	26	None	M10A1 PCC
M55 rocket	GB	51,716	98	Composition B M28 propellant	M55 SRC[b] Modified M1 CBP[c]
Rocket warhead	GB	24		Composition B	M16 PCC
115-mm projectile	VX	12,816		None	None
M55 rocket	VX	17,733		Composition B M28 propellant	None
Rocket warhead	VX	6		Composition B	M16 PCC

[a]Propellant charge container.
[b]Single round container.
[c]Center-bolted package in-transit gas shipment.

SOURCE: Adapted from NRC, 2008a; BGCAPP Overpack Summary, provided to the committee by ACWA, June 27, 2008.

Copyright © National Academy of Sciences. All rights reserved.

TABLE 1-2 Description of Overpacks

Overpack	Body	Base	Flange	Lid	Seal	Miscellaneous
12 × 56 single round container[a]	56 in. long, 12-in. ID, 0.134-in. wall, carbon steel tube	0.25 in. thick, 15.875-in. OD, carbon steel plate welded to tube	0.75 in. thick, 15.875-in. OD, carbon steel plate welded to tube and with 10 0.50-in. bolt holes	0.75 in. thick, 15.875-in. OD, carbon steel plate with 10 0.50-in. bolt holes	O-ring slot in flange	Lifting handles: 1 on top and 4 on tube body
9 × 41 single round container[b]	41 in. long, 9-in. ID, 0.134-in. wall, carbon steel tube	0.25 in. thick, 13.44-in. OD, carbon steel plate welded to tube	0.75 in. thick, 13.385-in. OD, structural steel plate welded to tube and with 8 0.50-in. bolt holes	0.75 in. thick, 13.385-in. OD, structural steel plate with 8 0.50-in. bolt holes	O-ring slot in flange	Lifting handles: 1 on top and 4 on body tube
7 × 27 single round container[c]	27 in. long, 6.99-in. ID, 0.134-in. wall, carbon steel tube	0.25 in. thick, 10.4-in. OD, carbon steel plate welded to tube	0.75 in. thick, 10.4-in. OD, carbon steel plate welded to tube and with 8 0.50-in. bolt holes	0.75 in. thick, 10.4-in. OD, carbon steel plate with 8 0.50-in. bolt holes	O-ring slot in flange	Lifting handle welded on top
M10A1 propellant charge container[d]	53.438 in. long, 8.953-in. ID, 0.0598-in. wall, steel tube	0.1196-in.-thick steel, formed to 8.953-in. OD base plate with 0.625-in. height rim inserted into tube and welded	0.1196-in.-thick steel, formed to 10.188 ID × 2.125 in. high recess with 3 bolt holes for lid and inserted over tube and welded	Lid drawing not provided	Gasket in lid	0.0897-in.-thick steel formed into spacing ring and inserted over tube.
M16A3 propellant charge container[d]	40.719 in. long, 6.875-in. ID, 0.0478-in. wall, steel tube	0.1196-in.-thick steel, bent to form 6.875-in. OD base plate with 0.625-in. height rim inserted into tube and welded	0.1196-in.-thick steel, formed to 8.125-in. ID × 2.125-in. high recess with 3 bolt holes for lid and inserted over tube and welded	Lid drawing not provided	Gasket in lid	

[a] Adapted from "Assembly for 12 × 56 single round container," provided to the committee by ACWA, June 13, 2008.
[b] 9 × 41-in. single round container, manufactured by U.S. Army Defense Ammunition Center, Serial Nos. S0001M to S0240M, Stockpile Certification Tests, provided to the committee by ACWA, November 7, 2008.
[c] 7 × 27 single round container, top-level assembly S727001, provided to the committee by ACWA, June 13, 2008.
[d] Drawing of M16 and M10 propellant charge containers, provided to the committee by ACWA, June 30, 2008.

Copyright © National Academy of Sciences. All rights reserved.

TABLE 1-3 Pueblo Chemical Depot Weapons Inventory

Munition	Agent Fill	Total Quantity	Known Leakers as of Mid-2008	Burster Energetics	Leaker Overpack Quantities as of Mid-2008 and Description[a]
105-mm projectile M60[b]	HD	383,419	33	0.12 kg tetrytol	31 in M16A3 PCC[c] in 12 × 56 SRC[d]; 1 in M16 PCC placed in M10A1 PCC placed in 7 × 27 SRC; and 1 in 7 × 27 SRC
155-mm projectile M110	HD	266,492	1	0.19 kg tetrytol	1 M10A1 PCC placed in 12 × 56 SRC
155-mm projectile M104	HD	33,062		0.19 kg tetrytol	None
4.2-in. mortar M2A1 (M6 propellant)	HD	76,722	10	0.064 kg tetrytol	8 in fiber container placed in 7 × 27 SRC; 2 in M16A3 PCC in 12 × 56 SRC
4.2-in. mortar M2 (M8 propellant)	HT	20,384	1	0.064 kg tetrytol	1 M16A3 PCC placed in 12 × 56 SRC

[a]New leakers will be overpacked as follows: 9 × 41 SRC for 155-mm projectiles, 7 × 27 SRC for 4.2-in. mortar rounds and 105-mm projectiles, and 12 × 56 SRC for leaking propellant charge containers. Information from personal communication between Joseph Novad, Technical Director, ACWA, and Margaret Novack, NRC, study director, July 1, 2008.
[b]Some of these projectiles are stored with their propellant charge. However, leakers will be sent to the EDT for disposal in overpacks with their propellant charges removed.
[c]PPC, propellant charge container.
[d]SRC, single round container.

SOURCE: Adapted from NRC, 2008a; information provided to the committee by CMA, June 26, 2008.

Copyright © National Academy of Sciences. All rights reserved.

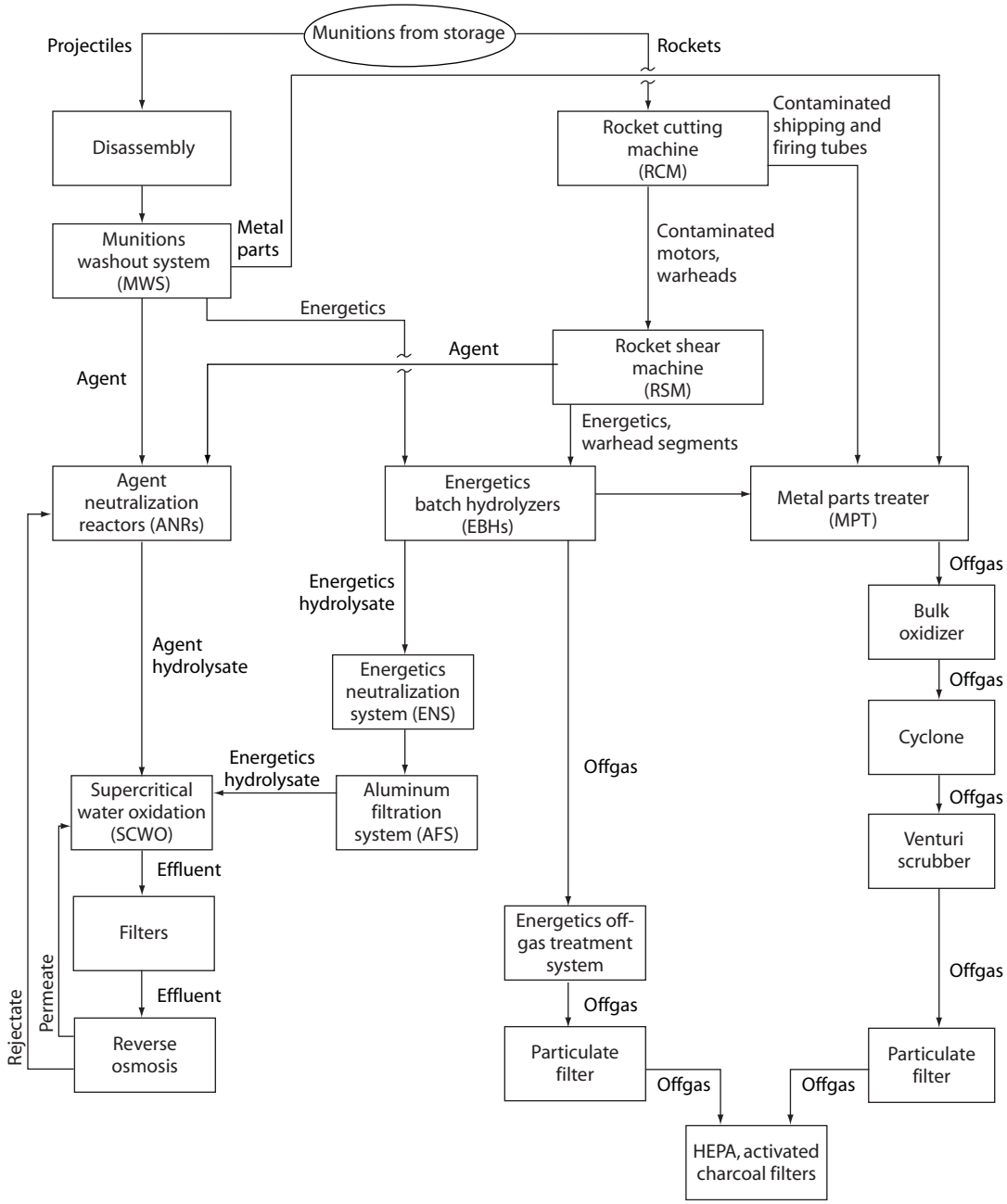

FIGURE 1-1 Main operations of the BGCAPP process. SOURCE: Adapted from NRC, 2008b.

Copyright © National Academy of Sciences. All rights reserved.

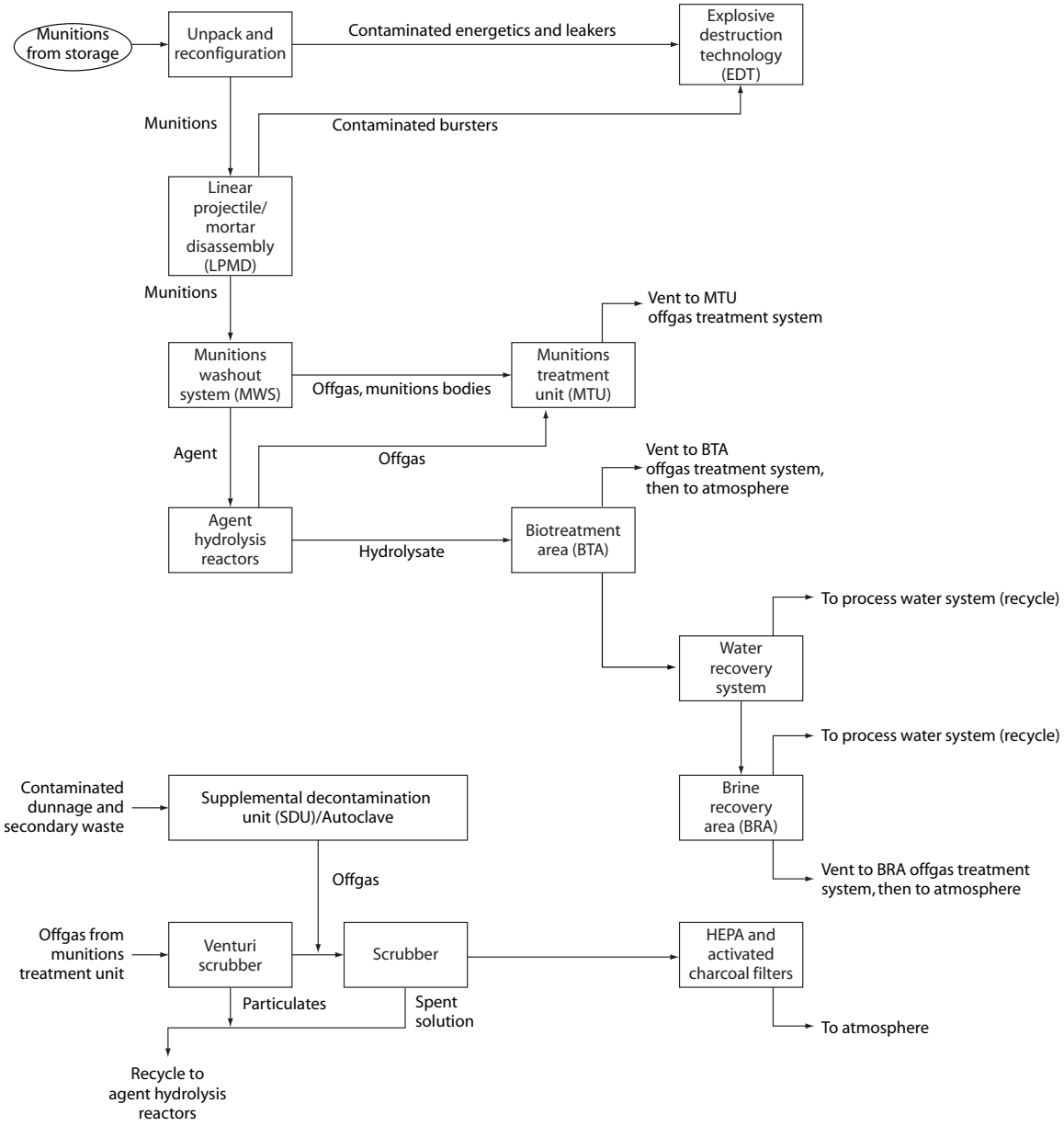

FIGURE 1-2 Main operations of the PCAPP process. SOURCE: Adapted from NRC, 2008b.

Copyright © National Academy of Sciences. All rights reserved.

Assessment of Explosive Destruction Technologies for Specific Munitions at the Blue Grass and Pueblo Chemical Agent Destruction Pilot Plants
http://www.nap.edu/catalog/12482.html

2
Evaluation Factors Specific to ACWA Sites Application

SELECTION OF EVALUATION FACTORS

Selection of a treatment technology must consider many factors. The report *Review of International Technologies for Destruction of Recovered Chemical Warfare Materiel* (International Technologies report) developed six primary factors for evaluation (NRC, 2006):

- Process maturity,
- Process efficacy,
- Process throughput,
- Process safety,
- Public and regulatory acceptability in a U.S. context, and
- Secondary waste issues.

These factors were used in the current report to compare four explosive technologies (EDTs): the Army's explosive destruction system (EDS); the detonation of ammunition in a vacuum integrated chamber (DAVINCH) (DV65 from Kobe Steel, Ltd.); the TC-60 model of the transportable detonation chamber (TDC) from CH2M HILL; and Dynasafe's static detonation chamber model SDC2000. The information on these technologies is being updated in this report to allow the technologies to be considered for implementation at the two Assembled Chemical Weapons Alternatives (ACWA) program facilities, the Blue Grass Chemical Agent Destruction Pilot Plant (BGCAPP) and the Pueblo Chemical Agent Destruction Pilot Plant (PCAPP). Two additional factors were used in this study to facilitate the comparison:

- Destruction verification capability and
- Process flexibility.

Each primary factor comprises a number of subfactors expressed in the form of a question (see Tables 2-1 through 2-6). The original factors and subfactors employed in the 2006 International Technologies report have since been substantially edited and modified to meet the needs of the current study. Each will be considered as it relates to the requirements set forth for the use of EDTs at BGCAPP and PCAPP (see Chapter 1).

Copyright © National Academy of Sciences. All rights reserved.

Assessment of Explosive Destruction Technologies for Specific Munitions at the Blue Grass and Pueblo Chemical Agent Destruction Pilot Plants
http://www.nap.edu/catalog/12482.html

DESCRIPTION OF EVALUATION FACTORS

Process Maturity

Process maturity is the readiness of an EDT for use in destroying the specific types of chemical munitions (or components thereof) stored at the Blue Grass Army Depot (BGAD) and the Pueblo Chemical Depot (PCD). The subfactors are listed in Table 2-1. The main evidence for process maturity is the testing of the technology that has been conducted with stored and recovered chemical warfare materiel and/or surrogate materials, in either the United States or other countries. Whether a technology has been permitted or otherwise approved for use in the United States is another key indicator. In assessing the process maturity of the EDTs with respect to the requirements for BGCAPP and PCAPP, the committee determined whether additional research or development would be required before an EDT could be applied. Again, the subfactors used in the International Technologies report (NRC, 2006) have been modified.

Process Efficacy

EDTs could be used at BGCAPP and PCAPP to destroy noncontaminated rocket motors, mustard agent-filled munitions in good condition, and leaking or rejected mustard agent munitions. In these applications, process efficacy will be considered relative to environmental regulations and the requirements of the Chemical Weapons Convention (CWC)—namely, Is the technology able to reliably satisfy the established destruction requirements? The subfactors for evaluating process efficacy are listed in Table 2-2. For a definition of destruction efficiency (DE), the following equation may be found[1]:

$$DE = 100 \times [(\text{Input} - \text{Output})/(\text{Input})]$$

For destruction of a chemical weapon, input would be the quantity of agent in a munition and output would be the quantity of agent in all the final residual streams after the detonation process has destroyed that munition. For comparison, the destruction and removal efficiency (DRE) is defined as

$$DRE = 100 \times [(\text{Feed rate} - \text{Emission rate})/(\text{Feed rate})]$$

where the emission rate is the rate at which the organic compound selected for measurement exits the process in the exhaust gas stream. The DRE is a measure of emissions to the atmosphere while DE measures total destruction. However, for all practical purposes, the DE and the DRE will be the same number because the liquid and solid secondary waste streams do not contain measurable quantities of chemicals of concern. Some vendors report DEs and others report DREs.

[1] See http://www.basel.int/techmatters/popguid_may2004_uk_pros%20and%20cons.pdf. Last accessed February 17, 2009.

Copyright © National Academy of Sciences. All rights reserved.

Other considerations in assessing efficacy are process reliability and robustness. The EDT must be able to destroy the materiel with minimal downtime for maintenance. Further, the ability of a technology to operate without failure under a wide range of conditions and within the schedule constraints for BGCAPP and PCAPP was also considered.

Process Throughput

An EDT should have a throughput rate that suits the overall operational schedule for BGCAPP or PCAPP. No table is provided for this factor because it has only one subfactor. The report relies on the peak throughput rates provided by the vendors. As explained in a footnote to Table 4-2, the committee used throughput information to project ranges for the time needed to complete disposal campaigns.

Process Safety

Process safety for both the workers onsite and the adjacent community must be assessed. In addition, the Department of Defense Explosive Safety Board (DDESB) will need to approve the Site Safety Submission for each application or issue a systemwide approval document (as already done for the EDS). The subfactors involved in process safety are listed in Table 2-3. Process safety is a very important factor. Early in its deliberations, the committee had decided that it would eliminate a technology from consideration if a major shortcoming in safety was identified.

All of the EDTs evaluated in this report have withstood hundreds to thousands of detonations in their respective chambers and vessels and in no case was a chamber wall breached as a result of stress cracking or metal fatigue. Both the TC-60 TDC and the DAVINCH DV65 have been found to be in compliance with ASME Boiler and Pressure Vessel Code Case 2564, for impulsively loaded pressure vessel. This code calls for protection against both ductile and brittle failure—that is to say, there should be demonstration of stability against flaws for cracks caused by fragments resulting from detonations.

Public and Regulatory Acceptability in a U.S. Context

Regulatory approval and public involvement are key to gaining acceptance for a new technology. In other words, regulators and the public must be involved in any decision-making process to allow a technology to be implemented in the United States. Acceptability in a U.S. context also involves considerations about specific concerns that have been raised by the public over the years pertaining to chemical munitions destruction.

This factor also specifically evaluates environmental regulations established by the Environmental Protection Agency (EPA) and by states regarding the destruction of chemical weapons and materials. Key in this evaluation is the ability of the technology to satisfy environmental permitting requirements, especially those that were established

Copyright © National Academy of Sciences. All rights reserved.

Assessment of Explosive Destruction Technologies for Specific Munitions at the Blue Grass and Pueblo Chemical Agent Destruction Pilot Plants
http://www.nap.edu/catalog/12482.html

under the Resource Conservation and Recovery Act (RCRA) for a "miscellaneous unit."[2] The permitting requirements of the Clean Air Act (CCA), as well as the principles of pollution prevention and waste minimization, would apply as well. The subfactors listed in Table 2-4 have been updated so they apply to requirements for BGCAPP and PCAPP.

Secondary Waste Issues

By definition, under RCRA, the materials to be treated are a waste. Consequently, the materials that remain after destruction of the agent and munition are considered secondary waste, which may take the form of solids, liquids, or gases. Phase changes may occur. For example, generated gases may be converted to solid form via adsorption or to liquids via condensation. The secondary wastes were evaluated for their form (liquid, solid, gas), quantity, and toxicity. The subfactors to evaluate secondary waste issues in terms of BGCAPP and PCAPP operations are listed in Table 2-5. Relevant characteristics of the generated secondary wastes were compared to the vapor screening level (VSL) for agent,[3] CWC requirements, and environmental regulatory requirements. Treatment of secondary waste and disposition of final residuals were also assessed.

Destruction Verification Capability

To meet the CWC treaty requirements and protect worker and public safety, the destruction of the treated materials must be verifiable. Verification can be accomplished using means such as monitoring devices and sampling at appropriate points in the treatment system and sampling the exiting materials. Each process must provide verification of destruction. The subfactors for evaluating the ability to verify destruction are listed in Table 2-6.

Process Flexibility

At Blue Grass the 70,000 noncontaminated rocket motors and 15,000 mustard agent-filled projectiles are expected to be consistent feedstocks. For these applications, the flexibility of an EDT is not an issue unless the Army chooses to use one EDT for both applications. At Pueblo, however, the rejects may have anomalies and the rejects and leakers may be in one or more of a variety of overpacks, as shown in Table 1-2. According to the Army, the ability to dispose of the munitions without removing them from the overpack would be beneficial but is not a requirement.[4] In the event that a munition is stored in double overpacks, it could be removed from the outer overpack

---

[2]Since it is likely that the technologies evaluated in this report will not be directly comparable to established technologies previously permitted under the RCRA program, they will need to meet the broad and stringent requirements for "miscellaneous units" established under 40 CFR Part 264, Subpart X.

[3]For mustard agent, the VSL, which is based on the airborne exposure limit (AEL), is 0.003 mg/m^3.

[4]Personal communication between Allan Caplan, System Development Group Leader, Non-Stockpile Chemical Materiel Project, and the committee, August 27, 2008.

Copyright © National Academy of Sciences. All rights reserved.

Assessment of Explosive Destruction Technologies for Specific Munitions at the Blue Grass and Pueblo Chemical Agent Destruction Pilot Plants
http://www.nap.edu/catalog/12482.html

prior to disposal. The committee understands that disposal of munitions without removal from the overpack offers advantages in throughput, safety, and flexibility. It is an advantage if the process is capable of handling all types and configurations of munitions listed in the four requirements considered in this report (see Chapter 1).

ASSESSMENT OF EVALUATION FACTORS AGAINST DIRECTIVES REFLECTED IN THE STATEMENT OF TASK

The committee believes that the overall system of factors and subfactors used in this report satisfies the directives in the statement of task.

REFERENCES

National Research Council (NRC). 2006. Review of International Technologies for Destruction of Recovered Chemical Warfare Materiel. Washington, D.C.: The National Academies Press.

Copyright © National Academy of Sciences. All rights reserved.

TABLE 2-1 Process Maturity Subfactors

Subfactor	Relationship to Maturity
Has the technology been permitted or otherwise approved and used for similar chemical munitions or energetics in the United States or other countries?	If the technology is presently in use either within the United States or elsewhere, it is considered to be mature, although some modification may be necessary to meet the U.S. permitting requirement. If the technology has been permitted or otherwise approved for treatment of similar chemical munitions or energetic materials in the United States, the technology is mature.
How much, if any, additional RDTE or reengineering is required to implement the technology?	If a moderate or an extensive amount of research, development, testing and evaluation is required to implement the technology, it may not be sufficiently mature.
What, if any, are the scale-up requirements needed to implement the technology?	Many technologies may be proven on a bench-scale or pilot plant scale, but significant scale-up issues may remain.
Can the technology be implemented within the time frame of plant operations?	A technology should be capable of being selected, permitted, constructed, and become operational within a period of time consistent with BGCAPP or PCAPP operating schedule.

NOTE: RDTE, research, development, testing, and evaluation.

Copyright © National Academy of Sciences. All rights reserved.

TABLE 2-2 Process Efficacy Subfactors

Subfactor	Relationship to Process Efficacy/Throughput
What is the DRE?	Technologies should be able to achieve a DRE for agent of at least 99.9999 percent.
What is the DE?	Technologies should be able to achieve a DE for agent of at least 99.9999 percent.
Is the process reliable?	The technology should not have excessive downtime due to scheduled and unscheduled maintenance.
Is the process robust?	The EDT should be able to accommodate minor variations in the munitions and to destroy large numbers of munitions.

TABLE 2-3 Process Safety Subfactors

Subfactor	Relationship to Safety
What are the worker safety and health risks?	The process should be able to operate with minimal risk to workers (e.g. minimizing handling, minimizing quantities of explosives).
What are the community safety and health risks?	The process should be able to operate with minimal risk to the surrounding community.
To what extent have engineering controls been developed to ensure process safety?	Engineering controls should protect workers and the community from releases of chemical agent.

Copyright © National Academy of Sciences. All rights reserved.

TABLE 2-4 Subfactors for Public and Regulatory Acceptability in a U.S. Context

Subfactor	Relationship to Public and Regulatory Acceptance in a U.S. Context
Are requirements under the National Environmental Policy Act (NEPA) applicable and if they are, will there be impediments to meeting these requirements?	The requirement to perform NEPA analyses may entail minimal or extensive effort depending on the potential environmental impact of the technologies being evaluated.
Does the technology employ any thermal treatment of the offgas that might be considered to be incineration or incineration-like?	Some U.S. public stakeholders may oppose offgas treatment that employs incineration or that is incineration-like.
Could the process produce dioxins or other unwanted by-products?	U.S. regulators and other stakeholders have reacted unfavorably to technologies that could create undesirable by-products.
Does the process allow holding and testing process residuals prior to release?	U.S. regulators and public stakeholders have reacted favorably to technologies that allow waste materials and by-products to be held and tested prior to their release.
Does the process result in excessive noise, odors, or other nuisances?	U.S. regulators and other stakeholders have reacted unfavorably to technologies that generate excessive noise, odors, or other nuisances.
Would the process be able to satisfy environmental regulatory requirements under RCRA?	Permitting requirements under RCRA are stringent and have caused delays in technology implementation, particularly if there is public opposition (see NRC, 2002).
Would the process be able to satisfy environmental regulatory requirements under the CAA?	Permitting requirements under the CAA are stringent and have caused excessive delays in technology implementation, particularly if there is public opposition (see NRC, 2002).
Does the process satisfy the principals of pollution prevention and waste minimization?	Technologies, to the extent possible, should employ process chemicals that are nontoxic and should result in minimal amounts of secondary wastes.
Is the process transportable?	Public acceptability is enhanced if the system can be removed quickly when a task is completed. For example, the technology used at BGCAPP or PCAPP can be dismantled when it is no longer needed and can be deployed elsewhere (at nonstockpile sites, for instance).

Copyright © National Academy of Sciences. All rights reserved.

Assessment of Explosive Destruction Technologies for Specific Munitions at the Blue Grass and Pueblo Chemical Agent Destruction Pilot Plants
http://www.nap.edu/catalog/12482.html

TABLE 2-5 Subfactors for Secondary Waste Issues

Subfactor	Relationship to Secondary Waste Issues
What is the character of the secondary wastes? Form (liquid, solid, or gas) Volume or mass Toxicity (the extent to which the wastes contain agent, degradation products, metals, other contaminants)	Secondary waste issues are most significant for wastes generated in large volumes or for wastes that may contain residual amounts of agent, agent degradation products, and other contaminants of concern in concentrations that warrant regulatory action.
Do secondary wastes meet Army criteria for unrestricted release (≤1VSL)? CWC requirements? Requirements of environmental regulations?	Secondary wastes must meet the Army's requirements for decontamination and may have to be destroyed in compliance with the CWC. It is theoretically possible that some new technology might generate secondary wastes that need additional scrutiny under the CWC if they contain Schedule 2 chemicals.[a] Moreover, additional treatment may be required if, secondary wastes do not meet environmental regulatory requirements as generated.[b]
What treatment/disposal methods will be practiced for each secondary waste and how will the final treatment residues be disposed of?	The final treatment and repository for all generated secondary wastes must be evaluated.

[a]The CWC established a schedule of chemicals that are controlled under the CWC. Several of the agent degradation products are designated under CWC Schedule 2, and their manufacture and distribution in commerce is controlled. If secondary wastes contain Schedule 2 chemicals, additional scrutiny from CWC inspectors may be required during secondary waste treatment or disposal.

[b]Some secondary wastes may contain hazardous waste (e.g., heavy metals) regulated under the RCRA program; if such contaminants are present at concentrations greater than allowed, the wastes may require additional treatment prior to ultimate disposal.

Copyright © National Academy of Sciences. All rights reserved.

TABLE 2-6 Subfactors for Destruction Verification Capability (for Chemical Agents)

Subfactor	Relationship to Verification Capability
What monitoring equipment is currently in place, and how is agent destruction ascertained?	If the monitors measure destruction directly or indirectly, then the system can be verified. If there are no such monitors, verification must be achieved in another way.
To what extent can the effluents be tested to ensure destruction?	If the generated gases, liquids, and solids are directly evaluated to determine agent residuals before posttreatment and no residuals are detected, then posttreatment may not be necessary.
Are the effluent treatment systems tested for residuals?	Destruction can be verified by sampling releases from all posttreatment units.
Does the process destroy or deform the munition body so that it cannot be used again or refilled?	This is something inspectors from the Organization for the Prohibition of Chemical Weapons, which implements the CWC treaty, look for.
Does the process allow holding and testing process residuals prior to release?	U.S. regulators and public stakeholders have reacted favorably to technologies that allow waste materials and by-products to be held and tested prior to their release.

Copyright © National Academy of Sciences. All rights reserved.

3
Current Status of Explosive Destruction Technologies

INTRODUCTION

The four explosive destruction technologies (EDTs) for chemical munitions that are evaluated in this report were initially evaluated and described by a National Research Council (NRC) committee in the International Technologies report (NRC, 2006). Since that initial evaluation, all of the technologies have been used for applications that postdate the 2006 report. As a result of the additional experience, each of the technologies has been modified to a greater or lesser degree. In this chapter, the changes to each EDT since early 2006 are described and the operating experience since that time is summarized. After each description and summary, the committee provides its thoughts on changes that could be made to enhance the performance of three of the technologies, as requested by Assembled Chemical Weapons Alternatives (ACWA) staff.[1] These suggested changes are not characterized as findings or recommendations because the committee was unable to discuss the feasibility of implementing them with the technology vendors. The D-100 system being evaluated for the noncontaminated rocket motors at Blue Grass is also described. The chapter concludes with a discussion of regulatory approval and permitting issues and other considerations that could impact the implementation of each technology.

SUMMARY OF EXPERIENCE SINCE EARLY 2006

Since early 2006, after which time no more data were gathered for the 2006 NRC International Technologies report, additional use has been made of all four of the EDTs reviewed in that report. Summarized below and described in greater detail under each of the technology-specific sections of this chapter is the experience gained from these more recent deployments.

The CH2M HILL transportable detonation chamber (TDC) TC-60 model chamber, designed for 60 lb TNT-equivalent net explosive weight (NEW), was subjected to tests at Porton Down in the United Kingdom. In 2004, nine mustard agent-filled and -fuzed projectiles were destroyed. In March 2006, 101 munitions were destroyed in testing to measure the throughput rate. From April to July 2008, this same TC-60 system

[1]Personal communication between Joseph Novad, Deputy Operations and Engineering Manager, ACWA, and Margaret Novack, NRC, study director, May 30, 2008.

Copyright © National Academy of Sciences. All rights reserved.

was used at Schofield Barracks in Hawaii to destroy 71 World War I and World War II-era phosgene-filled and chloropicrin-filled munitions.

The DV60 version of the detonation of ammunition in vacuum integrated chamber (DAVINCH) was used at Kanda Port in Japan between April and November 2006 to destroy 659 World War II-era bombs filled with a lewisite/mustard agent mix (Yellow bombs) and Clark I and Clark II vomiting agents (Red bombs). A version having a slightly greater explosion containment capability, the DV65, was then used at Kanda Port to destroy additional Yellow and Red bombs. As of mid-2008, 1,650 Red bombs and 400 Yellow bombs had been destroyed by various versions of the DAVINCH technology at Kanda Port.[2]

More recently, a DAVINCH DV50 was installed at Poelkapelle, Belgium, where it is being used to destroy chemical warfare materiel. As of mid-July 2008, 639 chemical munitions containing Clark I and Clark II agents and another 35 conventional munitions had been destroyed.

The Dynasafe static detonation chamber (SDC) model SDC2000 was used at the German government facility Gesellschaft zur Entsorgung Chemischen Kampfstoffe und Rüstungs-Altlasten mbH (GEKA) in Münster, Germany, to destroy over 13,000 German chemical warfare munitions filled with mustard agent (H), distilled (sulfur) mustard agent (HD), Clark I, Clark II, phosgene, and other chemical agents (Stock et al., 2007).[3] This work was done over a 2-year period. The same unit has also been used in a test mode at GEKA to destroy 27 10-cm mustard agent-filled mortar rounds.

Three explosive destruction system (EDS) units have been in operation since June 13, 2006, at the Pine Bluff Explosive Destruction System (PBEDS) facility in Pine Bluff, Arkansas. One of these is an EDS Phase 1 unit (EDS-1)with a vessel volume of 0.19 m^3 and a containment capacity of 1.5 lb (0.68 kg) TNT-equivalent NEW. The other two are the larger EDS-2 units, each having a 0.623 m^3 volume and a 4.8 lb (2.18 kg) TNT-equivalent NEW containment capacity. The EDS units are being used to destroy 1,220 recovered chemical munitions, the majority of which are 4.2-in. mortar rounds and German World War II-era Traktor rockets. As of May 2008, 1,065 munitions had been destroyed.

Most of the main characteristics of the three vendor-supplied EDT technologies are nearly the same now as they were in early 2006. The basic descriptions of technologies presented in the 2006 NRC International Technologies report are therefore still valid and are reproduced in Appendix A of this report. The Phase 2 version of the EDS system (EDS-2) is described in this chapter because it has not been described in detail in previous NRC reports. Changes to the design, configuration, or operating method of the technologies are described in the remainder of this chapter, along with a review of recent operating experience. It is recommended that before reading further in Chapter 3 readers not already familiar with EDTs begin by first reviewing Tables 4-10 and 4-11 in Appendix A. Table 4-10 in Appendix A summarizes engineering and operational parameters: throughput rate, destruction verification capability, largest munition that can be processed, reliability/operability, and transportability. Table 4-11 in

---

[2]Joseph Asahina, Chief of Technology, Kobe Steel, Ltd., "DAVINCH detonation system—recent improvements and path forward," presentation to the committee, May 28, 2008.

[3]Harley Heaton, Vice President for Research, UXB International, Inc., "Dynasafe static detonation chamber (SDC) series status update," presentation to the committee, May 7, 2008.

Copyright © National Academy of Sciences. All rights reserved.

Appendix A presents detailed information on throughput rates as a function of the nature of the munition being destroyed. The information is still correct.

TRANSPORTABLE DETONATION CHAMBER TECHNOLOGY

Changes to the Process Since Early 2006

No substantial changes have been made to the TDC process since the 2006 NRC International Technologies report was published (NRC, 2006). The model TC-60 process as configured for the testing at Porton Down is the same as that for the TC-25 controlled detonation chamber (CDC) system shown in Figure 4-1 of Appendix A. With one exception, the process flow diagram shown in that figure and the accompanying process description in Appendix A are still current and applicable to the TC-60. The "largest munition" rating of 60 lb TNT-equivalent NEW for the TC-60 (shown in Table 4-10 in Appendix A) is the design value, not the Department of Defense Explosive Safety Board (DDESB) rating of 40 lb TNT-equivalent NEW for the Schofield Barracks event.[4] If the TC-60 is to be used to detonate explosives of more than 40 lb TNT-equivalent, data generated by the detonation of an amount of explosives 25 percent greater than the desired DDESB approval rating will be needed. In addition to, or perhaps in connection with the process for receiving approval from the DDESB for a particular TNT-equivalent NEW rating, the requirements of the recently published American Society of Mechanical Engineers (ASME) Code Case for impulsively loaded vessels (Code Case 2564), which addresses the design of pressure vessels subject to repeated impact loadings, might have to be satisfied. However, the vendor has pointed out that its vessels are "ventilated vessels," as opposed to pressure vessels. The vendor's analysis indicates that its design will comply with the basic requirements of the Code Case, despite the fact that the chambers are fundamentally different in design and operation from a total containment pressure vessel.

When destroying munitions containing mustard or nerve agents, but not phosgene, oxygen is added to the detonation chamber. The additional oxygen is not mentioned in the process description in Appendix A. However, this process feature was employed during the March 2006 testing at Porton Down and is described in the comprehensive report covering the Porton Down tests between July 2004 and July 2006 (DiBerardo et al., 2007). The initial testing used oxygen cylinders that were placed in the chamber and detonated together with the munition. This technique was later replaced by an automated oxygen feed system to meter oxygen into the detonation chamber just before the detonation.

[4]Personal communication between Brint Bixler, Vice President, CH2M HILL, David Hoffman, CMA, and Richard Ayen, committee chair, May 12, 2008.

Copyright © National Academy of Sciences. All rights reserved.

Additional Experience Since Early 2006

The TDC vendor, CH2M HILL, has gained some additional operating experience since the text of the 2006 International Technologies report was finalized. The coverage of the TDC from that report (reproduced in Appendix A) mentions that a series of tests at Porton Down was scheduled for early 2006.[5] These tests were in fact successfully carried out, destroying United Kingdom 25-pounder mustard agent-filled projectiles. The results were presented in the previously mentioned report on the Porton Down testing prepared by the Edgewood Chemical Biological Center (ECBC) (DiBerardo et al., 2007).

Over a 2-week test period, 74 munitions were destroyed. The highest throughput was 42 munitions in less than 14.5 hours in the second week. Two munitions were destroyed in each detonation event. During the peak processing period, the time elapsed between detonation events was about 35 minutes.

Extensive environmental tests were conducted under ECBC direction during the period of highest productivity at Porton Down in 2006 (DiBerardo, 2007; DiBerardo et al., 2007). Three sampling periods—280 minutes, 290 minutes, and 230 minutes—were used on three consecutive days. The masses of agent destroyed during these three periods were 18.84, 21.98, and 18.84 pounds, respectively. The key results are shown in Tables 3-1 through 3-4.

Tables 3-1, 3-2, and 3-3 show measurements for the stream entering the final particulate filtration/activated carbon adsorption unit and for the stream leaving this unit. The stream at the outlet enters the atmosphere without further treatment. The conclusions presented in the report were as follows:

- No chemical agent was detected in the final air emissions. Additionally, no chemical agent was detected at the entrance to the activated carbon adsorbers. This corresponds to destruction efficiencies (DEs) of ≥99.9999 percent.
- The measured air emissions would be a minor additional source for Title V (Clean Air Act (CAA) Amendments of 1990) permitting of the facility.
- Two of the solid waste streams, spent pea gravel and spent lime, would be defined as hazardous waste owing to their lead content. The lead measurements exceeded the limits given in the Resource Conservation and Recovery Act (RCRA) regulations at 40 CFR 261.24.

During the March 2006 test period at Porton Down, the system generated about 0.4 pounds of scrap metal per pound of intact munition fed to the process. Spent pea gravel was generated only upon completion of operations. The system generated 1,939 kilograms of pea gravel during the 2006 campaign. The system generated 325 kilograms (estimated from volume) of spent lime; the lime was added downstream of the expansion tank to neutralize acid gases. The amount of spent lime produced is proportional to the number of munitions destroyed. The rate of generation is about 0.26 pounds of lime per pound of intact munition, or 19.8 pounds per detonation event. Spent activated carbon is

[5]The TDC in the 2006 NRC report was then known and referred to as the controlled detonation chamber (CDC).

Copyright © National Academy of Sciences. All rights reserved.

generated only upon completion of operations. The system generated 1,100 kilograms of spent activated carbon. The activated carbon was not changed during or after the 2004 shutdown at Porton Down.

Air emission samples were taken upstream and downstream of one of the two parallel high-energy particulate air (HEPA) filter/activated carbon adsorption units in the pollution abatement system and tested for oxygen, carbon dioxide, water, sulfur dioxide, nitrogen oxides, carbon monoxide, total hydrocarbons, particulate matter, hydrogen chloride, chlorine, metals, C1 to C6 hydrocarbons, volatile organic compounds, semivolatile organic compounds, dioxins, and furans. No emissions of regulatory concern were found. It was concluded as follows:[6]

> There does not appear to be any impediment to obtaining an air quality permit for the TC-60 CDC based on the results of sampling and analysis. The TC-60 would be considered a minor source for Title V (Clean Air Act Amendments of 1990) applicability determination purposes because all air emissions were below emission thresholds used for a rule applicability determination. A Subpart X (Miscellaneous Treatment Unit) permit would be required for a RCRA-affected facility because the munitions to be treated would be a hazardous waste and the miscellaneous unit designation is the most appropriate for this process. (DiBerardo et al., 2007, p. 87)

This Porton Down test report also provided details of earlier Porton Down testing that were not known when the NRC International Technologies report was prepared (NRC, 2006; DiBerardo et al., 2007). In September 2004, an operator observed that one of the expansion joints in the crossover pipes between the detonation chamber and the expansion tank had cracked. Subsequently, several of the expansion joints upstream and downstream of the expansion chamber were replaced, using a modified design. No further expansion joint failures were experienced during the testing at Porton Down.

Later on problems with incomplete destruction of agent and weapon bodies and a damaged heat exchanger were experienced and then resolved over the next 16 months. An important task during that period was the redesign of the donor explosives system. The use of the revised designed system solved the problem of incomplete destruction of agent.

As previously indicated, final throughput rate testing was carried out at Porton Down in March 2006. During this testing, 101 mustard-containing 25-pounder projectiles were destroyed. The highest throughput rate was achieved on March 22, when 16 projectiles were destroyed in eight detonation events. The test report states that TC-60 operations were conducted safely during the 2004-2006 testing at Porton Down (DiBerardo et al., 2007).

Upon completion of the Porton Down tests and closure of the site, the TDC system was prepared for shipment to Crescent City, Illinois, for storage. In December 2007 and January 2008, the system was prepared for shipment to Schofield Barracks in

[6]The committee is simply quoting the cited report on the regulatory requirements and has not independently reviewed the applicability of the Clean Air Act or any other regulatory requirement.

Copyright © National Academy of Sciences. All rights reserved.

Hawaii.[7] Several flexible connections were replaced. The flow control valves on the 3-in. and 10-in. pipes between the expansion tank and the air pollution control system were rebuilt. Tests were run using simulated equipment test hardware for 155-mm[8] projectiles and 4.2-in. mortars in preparation for operations at Schofield Barracks. Planning was done for destruction of 155-mm projectiles in Hawaii; the TDC had not previously destroyed munitions of that size. The system was then shipped to Hawaii in February 2008.

Operations were carried out during April and May of 2008, with the system set up in an open field at Schofield. The 71 munitions to be destroyed had been removed from a Schofield Barracks training range in 2006. The munitions dated from World War I and World War II and were thought to include the following:

- One 4-in. mortar filled with chloropicrin,
- Ten 4-in. mortars filled with phosgene,
- Thirty-eight 155-mm projectiles filled with phosgene, and
- Twenty-two 75-mm projectiles filled with phosgene.

It was subsequently found during operations that one of the 75-mm projectiles was actually filled with chloropicrin.

Daily operations were carried out by personnel from the U.S. Army ECBC. The initial two phases of operations were work-up trials and developmental testing. During these operations, two 4-in. Stokes mortars filled with phosgene and eight 155-mm projectiles filled with phosgene were destroyed. The next phase of operations was termed the operational testing: It called for the destruction of 30 155-mm projectiles filled with phosgene. One additional munition was destroyed, for a total of 31. The operations were carried out on April 21, 22, and 23, 2008, with 10, 10, and 11 detonations carried out on each of these days, respectively. The operations proceeded fairly smoothly. The cycle times averaged 39 minutes on the first day and 37 minutes on the second and third days. No phosgene was detected in the vestibule, the system enclosure, or the air filtration units.

The second phase of operations took place on May 12 and 13, 2008. These operations were witnessed by the chair of the committee, Richard Ayen. On May 12, 20 75-mm projectiles filled with phosgene were destroyed, with two projectiles destroyed in each detonation event. Minor problems were encountered with the detonator firing system. On at least two occasions, lack of electrical continuity in the firing circuit required an operator to reenter the area in front of the detonation chamber to adjust the connector to the "pass-through," so called because it allows the electrical firing charge to pass through the walls of the chamber.[9]

On May 13, more serious problems were encountered with the detonator firing system. Planned production for the day was two 75-mm projectiles and eight Stokes 4-in. mortars, all filled with phosgene. Continuity problems and misfires resulted in the

---

[7]Personal communication between Brint Bixler, Vice President, CH2M HILL, and Richard Ayen, committee chair, May 12, 2008.

[8]The committee is simply quoting the cited report on the regulatory requirements and has not independently reviewed the applicability of the Clean Air Act or any other regulatory requirement.

[9]For a picture of the pass-through, see Figure 2.2 in DiBerardo et al. (2007, p. 28).

Copyright © National Academy of Sciences. All rights reserved.

replacement of the pass-through and other firing system components. The accompanying delays resulted in the destruction of only the two 75-mm projectiles and two of the mortars. The firing plug, which connects the firing circuit to the chamber pass-through, was subsequently analyzed by the manufacturer, which determined that the firing plug had been incorrectly modified in the field at the project site, causing an internal electrical short. This has been corrected by a change to standard operating procedures preventing field modifications and mandating the use of firing plugs that have been tested and certified by the manufacturer.

Other design or operational issues that arose during or after the campaign were as follows:

- After the campaign was completed it was discovered that approximately 50 gallons of acidic aqueous fluid (pH = 1) had accumulated in the expansion tank.[10] Such an event had never before occurred. It was attributed to excessive moisture added to the system through the chamber purge air. The purge air feed system was subsequently modified to address this problem.
- During each detonation event, lime is automatically injected into the system. The lime feed was limited by the equipment's maximum feed rate. CH2M HILL determined that a faster lime feed rate would be beneficial and the feed system is being modified to increase the lime feed rate.
- Late on May 13, it was discovered that a heat exchanger directly upstream of the activated carbon adsorber had failed; this was the same heat exchanger that had failed during the testing at Porton Down.[11] It was subsequently replaced by a system with upgraded materials of construction: 316 stainless steel was used in place of 304 stainless steel, and various Heresite baked phenolic coatings were applied to the various parts.

The committee expects that a connection exists between these three issues. Acidic materials are generated in the detonation chamber and collect in part in the expansion chamber. Some pass through into the pollution abatement system. If the lime feed system is not effective, is not operating reliably, or is set too low, some acidic materials will work their way downstream to the heat exchanger and other parts of the pollution abatement system. The modifications to the purge air and lime feed systems implemented by CH2M HILL are designed to prevent this problem from recurring.

ECBC had obtained an emergency destruction permit from the state of Hawaii allowing 90 days of operation and the destruction of 90 munitions. Agreement with the state took 6 months. The permit was issued 12 months after applying, which is not atypical. A public meeting has been held in connection with applying for the permit; no opposition arose during the event. No opposition was expressed during the comment periods for either the environmental assessment or the permit.

---

[10]Communication via teleconference between David Hoffman, CMA, George Parshall and Douglas Medville, committee members, Richard Ayen, committee chair, Margaret Novack, NRC, study director, and Harrison Pannella, NRC, senior program officer, August 18, 2008.

[11]Personal communication between Brint Bixler, Vice President, CH2M HILL, and Richard Ayen, committee chair, August 15, 2008.

Copyright © National Academy of Sciences. All rights reserved.

It was also necessary to obtain a DDESB site safety approval for the Schofield Barracks event. An event-specific approval was obtained. The TDC's DDESB site safety approval allows detonation of no more than 40 pounds of TNT-equivalent NEW.[12]

Proposal for Static Firing of Noncontaminated Rocket Motors

The committee was informed that the Blue Grass Army Depot (BGAD), in partnership with CH2M HILL, had presented a proposal to the Blue Grass Chemical Agent Destruction Pilot Plant (BGCAPP) relating to Requirement BG-1.[13] A CH2M HILL nontransportable D-100 detonation chamber has been installed at BGAD for destruction of conventional munitions (versus the chemical stockpile stored there). DDESB approval has been obtained for 49.3 pounds of total explosives in each detonation event.[14] RCRA permitting of this system is under way. BGAD has proposed a program to BGCAPP to test the technical feasibility of using this existing D-100 CDC system to destroy the rocket motors by static firing.[15] The D-100 is adequate in size for this purpose, having internal dimensions of 14 ft wide × 16 ft high × 20 ft long. The detonation chamber is connected to a cylindrical expansion tank made from mild steel, 10 ft in diameter by 71 ft in length. The air pollution control system consists of a cartridge-type particulate filter with pulsed jet cleaning, followed by an exhaust fan.

Before being processed, the rocket motors would be removed from their shipping and firing tubes (SFTs) and their fins would be banded. Banding the fins prevents them from deploying when they are removed from the SFTs. This allows easier handling when mounting the rocket motors in the firing stand and, after firing, removing the motors from the stand. The motors would then be loaded into a static firing stand, the stand moved into the detonation chamber, and the firing wires connected. After the chamber door is closed, the rocket motors would be ignited. The door would then be opened and the chamber ventilated for 5 to 10 minutes before workers enter. The firing stand would be removed and replaced with another firing stand freshly loaded with rocket motors. If attempts to use the existing igniters in the motors would prove unsuccessful, new igniters would be used.

The BGAD-CH2M HILL proposal is for a series of tests with actual rocket motors to demonstrate that the static firing concept will work as anticipated. It is expected that between four and six motors could be destroyed in each firing cycle and that the throughput rate would be up to 18 motors per hour. Calculations based on a burn

---

[12]Limits on the maximum size of detonations are set by the DDESB. Physical strain measurements on the walls of the chamber are carried out during detonations in the chamber. These measurements are reviewed by experts, and the DDESB issues an approval letter that states the upper limit for size of detonations.

[13]Brint Bixler, Vice President, CH2M HILL, "Destruction of chemical weapons using CH2M HILL's transportable detonation chamber," presentation to the committee, May 8, 2008.

[14]Personal communication between Brint Bixler, Vice President, CH2M HILL, and Richard Ayen, committee chair, July 23, 2008.

[15]Personal communication between Brint Bixler, Vice President, CH2M HILL, and Margaret Novack, NRC, study director, July 23, 2008.

Copyright © National Academy of Sciences. All rights reserved.

time of 2.5 seconds for 19.3 pounds propellant show that the temperature in the chamber would rise by 32°F for each rocket fired. Whether the rocket motors will be fired sequentially or all at once will be determined during these tests. Because the testing proposal states that sequential motor firing is preferred, sequential firing will be tested to determine technical feasibility. With the short 2.5-second burn time, whether the rockets are fired sequentially or all at once will not appreciably affect the throughput rate.

Based on its past experience in obtaining DDESB approvals of its site safety submissions, CH2M HILL normally uses 2 pounds donor explosive for each pound of energetics in the munition for a controlled detonation. However, it claims this practice would not apply to the firing of rocket motors. The static firing is a deflagration over 2.5 seconds, not a detonation. It does admit that there is a remote chance of a detonation, but only one at a time, and the chamber, which has a 49.3 lb TNT-equivalent DDESB rating would accommodate this detonation. Hence, the D-100 chamber could be used to fire multiple (between four and six) rocket motors.

The M28 propellant in M55 rocket motors contains 2 percent lead stearate—a significant amount— and the initiator might contain a smaller amount of lead azide (BGCAPP, 2004). BGAD anticipates that at least 99.999 percent of this lead would be captured by the particulate filters in the air pollution control system, based on previous testing with conventional systems.

Various models of detonation chambers from CH2M HILL's product line have been used for destruction of conventional weapons in the United States (Bixler, 2006). These systems have fewer unit operations in their pollution abatement systems and were intended to be used to destroy only conventional weapons. Some of the systems employed and examples of their application follow:[16,17]

- Use of a T-10 model to destroy white phosphorus munitions at Camp Navajo Army National Guard Base in Arizona;
- Use of a T-10 model to destroy munitions at four sites in California;
- Use of a T-10 model to destroy smoke, riot agent, and thermite grenades and cartridges at Redstone Arsenal in Alabama;
- Use of a D-200 model to destroy multiple conventional munitions at Crane Naval Surface Warfare Center in Indiana; and
- Use of two D-100 models at Milan Army Ammunition Plant, Tennessee, for the destruction of 25,000 155-mm projectiles packed with submunition grenades.[18]

[16]Personal communication between Brint Bixler, Vice President, CH2M HILL, and Richard Ayen, committee chair, August 29, 2008.

[17]Personal communication between Tom Cain, Senior Principal Engineer, Noblis, and Richard Ayen, committee chair, September 19, 2008.

[18]The D-100 was originally designated D-130 in the permitting documentation.

Copyright © National Academy of Sciences. All rights reserved.

Thoughts on Design Changes and Upgrades

Design changes and upgrades that could improve the ability of the TDC to destroy large numbers of munitions—for example, the 15,000 mustard agent H projectiles at BGAD—are as follows:

Reliability

- Replacement of the detonator initiation system with a system with multiple firing redundancy for each detonator circuit—for example, the system used on the EDS or a similar system.
- Redesign of the TC-60 initiation system pass-through to make the technology more reliable. An alternative would be to use a better pass-through design from the EDS or another EDT.
- A thorough review of materials of construction along with a redesign of the system in accordance with the findings of the materials of construction review.
- An increase in the maximum feed rate of the lime feed system.
- Continued monitoring for accumulation of low-pH liquid in the expansion tank and, if necessary, further implementation of controls to prevent recurrence.

Maintainability

- A redesign of the initiation system pass-through so that it can be replaced in a few minutes rather than a few hours.

Capacity

- Obtaining DDESB approval for higher, e.g., 60 lb total TNT-equivalent NEW. This could be important for Requirement BG-2.
- Development of effective procedures for detonating munitions without removing them from overpacks and obtaining DDESB approval for them. This could be important for Requirement P-1, which would benefit from being able to destroy munitions in overpacks.

Copyright © National Academy of Sciences. All rights reserved.

DAVINCH TECHNOLOGY

Changes to the Process Since Early 2006

The basic three-step process for destroying agent in the DAVINCH chamber under a near vacuum (0.2 psi) remains essentially the same as described in the 2006 NRC International Technologies report (NRC, 2006, pp. 36-39):[19]

1. Instant compression of the agent by a propagating shock wave resulting from detonation of an external emulsion explosive,
2. Mixing of the agent and detonation gas at 3000 K and 10 GPa and expansion of the agent and detonation products into the surrounding vacuum, and
3. Thermal decomposition of the agent by a 2000°C (2273 K) fireball in the chamber.

This three-step process is shown in Figure 4-2 of the 2006 International Technologies report, and the simplified process flow is shown in Figure 4-3 of that report (see Appendix A). Since that report was issued, however, several changes have been implemented as part of the ongoing application of the DAVINCH technology at the Belgian military facility at Poelkapelle, Belgium. Among the changes made are the following:

- To reduce stress, the semiflat ends of the DAVINCH vessel have been replaced by rounded, hemispherical heads. Also, the saddle on which the DAVINCH vessel rests has been strengthened to reduce vibration, and the outside of the inner DAVINCH vessel has been reinforced with four mild steel plates.
- An automatic clamping system is used for the DAVINCH vessel door. Previously, two U-shaped clamps were used and were tightened manually. Currently, six independent clamps are used. These are hydraulically operated and clamp the flanges of the DAVINCH vessel door.
- Munitions are placed in slings and manually hung on the linear rack at the top of the inner vessel by workers in personnel protective equipment (PPE) while standing on a hydraulic lift. (In the operations at Kanda Port, Japan, munitions were hung on the rack with a robotic arm that extended into the vessel).
- The pumpable emulsion of explosives that previously had been injected into boxed munitions has been replaced by aluminized emulsion explosives in flexible tubes that are strapped onto the munition bodies. The placement of these tubes around the munition, the number of tubes used, and the quantity of explosive charge depend on the munition size, wall thickness, and other factors.

[19]One change is that oxygen is now added as explained below.

Copyright © National Academy of Sciences. All rights reserved.

- Following evacuation of the DAVINCH vessel to 0.2 psi, about 2 m^3 of oxygen are injected into the vessel to assist in agent destruction and to reduce the quantity of dust produced by the detonation of munitions. Additional oxygen was used in operations at Kanda Port in Japan.
- The offgas treatment system at Poelkapelle has been modularized and placed on two skids, each 6 meters (20 feet) long and 2.4 meters (8 feet) wide (Lefebvre, 2008).
- A calcium peroxide chlorine scavenger is now mixed into the emulsion donor charge to control chlorine produced in the DAVINCH vessel during operations. This reduces the HCl in the offgas and thereby minimizes pitting and corrosion in piping and other equipment. As a result, the chlorine concentration in dust in the inner vessel doubled and the HCl concentration in the stack (prior to release to the atmosphere) was reduced from 180-200 ppm to 0.1-0.5 ppm. Between 6 and 7 kg of $CaCl_2$ are generated per shot; the $CaCl_2$ is mixed with metal fragments and dust and is removed with these materials when the inner vessel is cleaned.
- To minimize the formation of dioxins in the offgas, an air quench is used, cooling the offgas to 30°C.

A perhaps more substantial change to the DAVINCH process is the use of a cold plasma oxidizer to treat the offgas rather than heating it in a combustion chamber.[20] In the current configuration, the offgases resulting from agent destruction in the DAVINCH chamber are filtered to remove particulates and, with oxygen from an external supply, are pumped into the cold plasma oxidizer. The concentration of CO in the offgas is reported to be reduced from 35-40 percent to less than 0.05 percent between two diverging electrodes in a 900°C-950°C plasma arc reactor. The arc temperature is 1600°C and the residence time in the cold plasma oxidizer is 0.5-1.0 second. As a result of the 99.9999 percent agent destruction and removal efficiency (DRE) in the DAVINCH vessel, the technology provider, Kobe Steel, Ltd. states that there is no need to use the cold plasma oxidizer for additional agent destruction; however**,** it reports removal of remaining traces of residual mustard agent HD in the offgas of more than 99.99 percent in the cold plasma oxidizer (Katayama and Ueda, 2006; Asahina et al., 2007). The DAVINCH Glid-Arc Cold Plasma Thermal Oxidizer, illustrated in Figure 3-1, utilizes a small specially designed reactor with a "quasi-periodic ignition-spreading-extinction sequence of a series of electrical discharges" called gliding arcs. The gliding-arc discharge is somewhere between a luminescent discharge and an electric arc and is called "cold plasma." Each arc glides along between two diverging electrodes for ignition of premixed combustible gases and generates some oxygen radicals by the high energy of electrons to assist the oxidation reaction.[21] The gliding arcs between the electrodes of the Glid-Arc reactor are the energy source that ignite the incoming gases, resulting in a discharge that looks somewhat like a visible flame but is less-defined and more like the flame of a candle than the stable visible flame envelope of typical commercial burners. "Cold plasma" is a

[20]This is described in the International Technologies report (NRC, 2006, Appendix A, p. 38).

[21]Personal communication between Frank Augustine, Chief Technology Officer, Versar, Inc., and Margaret Novack, NRC, study director, July 7, 2008.

Copyright © National Academy of Sciences. All rights reserved.

term described by Orfeuil (1987, p. 629). The book explains the difference between thermal plasmas, in which the electrons and the heavier bodies are both at 10,000 K to 20,000 K, and "cold plasmas" (also called "nonthermal plasmas" or "luminescent discharges"), with electron temperatures of about 10,000 K and heavier body temperatures between 0.01 and 0.1 of the electron temperatures. As mentioned above, the cold plasma in the DAVINCH technology primarily serves to ignite the premixed combustible gases entering the Glid-Arc cold plasma reactor.

Following a quench, the treated offgases are held in a retention tank, where they will be tested for any remaining agent and other organic compounds of interest. If the level of agent in the offgas is ≤1VSL for the agent involved, the gas then passes through HEPA filters and activated carbon filters and is released. If agent in the treated offgas is >1VSL, it is recycled through the detonation chamber and the cold plasma unit for further treatment.

The process flow diagram shown in Figure 4-3 in the 2006 International Technologies report (see Appendix A) shows an offgas holding tank in front of the cold plasma unit. After the publication of that report and as shown in Figure 3-2, this has been moved downstream from the cold plasma unit and is now called the offgas retention tank. The offgas feed rate to the cold plasma unit in Belgium is 28 m^3/hr and in this application, two cold plasma units in parallel are used to process the offgas. Since the volume of the inner vessel of the DAVINCH DV50 used in Belgium is 33 m^3, processing takes about 35 minutes.

During start-up and preheating, a fuel such as propane can be utilized with air as the source of oxygen. During operation following detonations in the DAVINCH chamber, the incoming gases to the Glid-Arc cold plasma reactor are rich in H_2 and CO and include enough oxidizer [O_2] to provide 99.9 to 99.99 percent oxidation after mixing downstream of the reactor and being held at 900°C-950°C for 0.5-1.0 second.

Additional Experience Since Early 2006

By the time data gathering for the International Technologies report had been completed (early 2006), the DAVINCH technology had been used to destroy about 600 World War II-era Japanese bombs recovered from beneath Kanda Port in Japan. The unit used was a DV45, which had an explosion containment capacity of 45 kg TNT-equivalent NEW. Between April and November 2006 a larger DAVINCH unit, the DV60, was used at Kanda Port to destroy another 659 Red and Yellow bombs. The Yellow bombs contained a 50:50 mix of lewisite and mustard agent and the Red bombs contained Clark I and Clark II vomiting agents. Following that operation, a modified version of DAVINCH, the DV65, was used at Kanda Port to destroy nearly 800 Red and Yellow bombs. In all, 2,050 such bombs have been destroyed by the DAVINCH technology at Kanda Port.

In July 2006, Kobe Steel, Ltd. contracted with the Belgian Ministry of Defense to install a DAVINCH system having a 50 kg TNT-equivalent explosion containment capacity—the DV50—at the military facility at Poelkapelle. This unit will destroy about 3,500 munitions over a 36-month period. Acceptance testing took place in January and February 2008 with 177 Clark agent-filled projectiles destroyed in 52 shots (detonation

Copyright © National Academy of Sciences. All rights reserved.

events) (see Figure 3-3). As of July 14, 2008, DAVINCH had destroyed 639 projectiles containing the Clark agents in 148 shots.[22] The DV50 is 7.92 m long and has both an inner and an outer vessel. The wall thickness of the outer vessel is about 170 mm and the wall thickness of the inner vessel is about 220 mm. The inner diameter of the outer vessel is 2.67 m. The DV50 has an internal volume of 33 m^3. The DV50 footprint at Poelkapelle, including the offgas treatment area and holding tank, is 20 m by 40 m, or about 8,600 ft^2.

The munition destruction record as of mid-July 2008 is summarized in Table 3-5. In acceptance testing at Poelkapelle, the DV50 has carried out 2.5 to 3 shots per 10-hour day for five days per week. During operations, the DV50 cycle times at Poelkapelle have been 60-70 minutes per shot and, in accordance with Belgian government policy, only three shots per day
have been carried out. The cycle time per shot includes the removal of between 40 kg and 107 kg of metal fragments (depending on the size and quantity of munitions being destroyed) by workers in PPE following each shot.
In operations at Poelkapelle, the placement of tubular donor charges around the munitions has resulted in smaller fragments and a more uniform distribution of metal fragments impinging on the surface of the inner vessel. Consequently, wear on the inner vessel walls has been reduced compared to previous operations in Japan, and the need to rotate the inner vessel to distribute wear has been eliminated. The expected inner vessel life is over 1,000 shots, according to the manufacturer.
Routine scheduled maintenance activities at Poelkapelle include the removal of condensate water from the cold plasma oxidizer, cleaning of piping, and removal of filter dust. These and other activities take about 30 minutes per day, an additional 3 hours per week, and yet another 3 hours per month.

Two unanticipated events took place at Poelkapelle. In one of them, there was some difficulty in opening the vessel lid. This was due to the deposition of dust on the traveling rail on which the lid moves laterally. Unscheduled downtime also occurred when a 21-cm projectile detonated while out of position in the vessel and after the vessel lid had been closed. It is possible that the projectile fell from the slings in which it had been placed and detonated while lying on the vessel floor rather than while hanging in the slings. As a result, the inner chamber, which is composed of a hard armor steel, developed two cracks about 5 cm long and less than 1 mm wide. The cracks did not extend to any of the four carbon steel layers placed around the inner chamber or to the outer chamber. To prevent their propagation the cracks were arrested by drilling holes at each end. Following this incident, more than 70 additional shots took place in the DAVINCH chamber without further incident.

As of late July 2008, there had been no lost worker days or injuries associated with DAVINCH operations.

In addition to operations involving the destruction of munitions containing chemical agent, a DV60 was used to destroy a simulated M55 rocket containing 3 kg of dimethyl methylphosphonate as a surrogate for the nerve agent sarin (GB). The burster was simulated using 0.78 kg TNT, and the propellant was simulated using 6.4 kg of

[22]Personal communication between Joseph Asahina, Chief of Technology, Kobe Steel, Ltd., and Margaret Novack, NRC, study director, July 23, 2008.

Copyright © National Academy of Sciences. All rights reserved.

smokeless powder granules. In this test, 22.2 kg of an emulsion explosive donor charge was used. The simulated rocket—without an SFT—was placed in a wooden box and placed in the DAVINCH vessel. Kobe Steel, Ltd. reported a DE of 99.999998 percent in the DV60 chamber and, following treatment of the offgas in a cold plasma oxidizer, a total DRE (chamber plus oxidizer) of 99.9999998 percent (Kitamura et al., 2007).

Future Developments for DAVINCH

In tests, Kobe Steel, Ltd. has used linear shaped charges on the SFT of a simulated overpacked M55 rocket to demonstrate the ability to cut open the overpack and aluminum rocket body and to access and initiate the explosion of the simulated rocket warhead burster.[23]

This is part of an activity to demonstrate the ability of a DAVINCH to process and destroy complete M55 rockets in their overpacks and SFTs. To date, the destruction of a complete overpacked M55 rocket containing both the rocket motor and agent has not been demonstrated with any technology. Kobe Steel, Ltd. claims that one intact M55 rocket can be destroyed per shot (cycle) in the existing DV65, and that in the as-yet-unbuilt and longer DV120, three intact rockets could be destroyed per shot. In both cases the DV65 and the DV120, the processing rate would be nine shots per 10-hour day. Overpacked leaking M55 rockets would be processed in the proposed DV120 at a rate of six shots per day.

In Poelkapelle, the DAVINCH DV50 will need to process a variety of items in addition to Clark agent-filled projectiles. These include mustard agent HD-filled munitions with an agent heel, old munitions that have been encased in concrete, 4-in. Stokes mortars, and Livens projectiles. These future applications may require modifying the DAVINCH process—for example, changing the method of placing donor charges around these items, using shaped charges to access the concrete-encased munitions, modifying the inner vessel, and, possibly, modifying the cold plasma oxidizer operating conditions. The extent to which the operation of the DAVINCH technology will have to be modified to process these items remains to be determined.

Kobe Steel, Ltd. is also developing a transportable version of a DAVINCH whereby the vessel and offgas processing equipment would be carried on two flatbed trailers. Although a scale model of the unit exists, the committee does not know the status of design and fabrication of such a unit nor does it know about the unit's explosion containment, processing rate, or the range of items it can process.

Thoughts on Design Changes and Upgrades

Based on operating experience to date, the DAVINCH technology appears to be fairly mature and well designed. As noted above, incremental changes to the technology

[23]Joseph Asahina, Chief of Technology, Kobe Steel, Ltd., "Destruction experiments of simulated over-packed chemical munitions using linear shaped charges," presentation to the committee, May 28, 2008.

Copyright © National Academy of Sciences. All rights reserved.

are ongoing. Other changes that could improve the capability of DAVINCH to destroy large numbers of munitions include the following:

- Development of a longer DAVINCH vessel—the DV120, for instance—to increase the processing rate and enable it to destroy large numbers of munitions in a reasonable amount of time.
- Placement of munitions in the inner vessel such that there is no possibility of their being dislodged and detonating on the vessel floor. This may entail a placement method other than hanging the munitions in slings from the linear rack at the top of the inner vessel.
- Demonstration of the ability of the DAVINCH to destroy munitions in multiple overpacks and with packing materials placed between the overpacks. Kobe Steel, Ltd. has demonstrated the ability to access and destroy simulated overpacked M55 rockets using shaped charges. Similar demonstrations using simulated overpacked projectiles would be an extension of this activity.
- Development of a procedure for the static firing of noncontaminated rocket motors that will allow more efficient disposal without using donor explosives.
- Consideration of the use of a catalytic oxidizer or a bulk oxidizer as an alternative to the Glid-Arc cold plasma thermal oxidizer.

DYNASAFE TECHNOLOGY

Changes to the Process Since Early 2006

The Dynasafe process for the destruction of chemical munitions described in the 2006 NRC International Technologies report (see Appendix A) remains generally the same. Between 2006 and the writing of the present report, the munitions handling system has become less labor intensive. In April 2006 a turnkey Dynasafe SDC2000 was commissioned for GEKA at Münster, Germany. Many types of recovered chemical warfare materiel in the German inventory were destroyed at this facility. Over 13,000 items were destroyed with no safety incidents while operating two shifts per day, five days a week. By 2007, Germany had completed all of the chemical munitions destruction required of it by the Organization for the Prohibition of Chemical Weapons under the pre-1945 requirements of the CWC.

At the time of the 2006 International Technologies report, the SDC1200 mobile version of Dynasafe technology consisted of eight containers that could be carried on three flatbed trailers. A new and expanded system has been developed that will fit into eleven 8 ft × 8 ft × 40 ft and 20 ft containers,[24] which fit onto standard trailers.

Dynasafe AB has been concerned that in the United States the secondary combustion chamber used for offgas treatment might be considered to be a form of

[24]To be exact, three 40-ft containers for the main system; two 20-ft containers for feeding and scrap removal; one 20-ft container as a control room; one 20-ft container for utilities; three 20-ft containers for the pollution control system; and one 20-ft container for spare parts.

Copyright © National Academy of Sciences. All rights reserved.

incineration. Information provided by UXB International has indicated that it would propose a flameless thermal oxidizer (FTO) to replace the secondary combustion chamber now used at GEKA. This FTO would be provided to UXB by Selas Fluid Processing Corporation, which calls it (when it is electrically heated) the Thermatrix ES FTO system. The FTO consists of an inlet dip tube for premixing the offgas, air, and fuel, followed by an oxidation zone and a bed packed with porous ceramic media, all contained inside a refractory-lined shell. The FTO has a design operating temperature of 1600°F, with minimum and maximum temperatures of 1400°F and 1800°F, respectively. The alumina ceramic media packing does not have a catalytic coating. The electrically heated ES FTO is rated for up to 800 Nm^3/hr.[25, 26, 27]

Other modifications for a U.S. application would reduce the liquid waste. Subsequently, the committee was informed that the offgas treatment system for use in the United States would consist of the following:[28]

- Equalization tank;
- Cyclone or filter for large-particle removal, with the particulates recycled to the process;
- Flameless thermal oxidizer;
- Fast quench system to minimize formation of dioxins and furans;
- Acidic and basic scrubbers;
- Fine-particle filter;
- Activated carbon baghouse filter with Sorbalite for removal of mercury and other metals;
- Ammonia injection system for nitrogen oxides removal; and
- Online instrumentation (stack gas analyzers).

The committee was confident that Dynasafe AB can provide an air pollution control system that will remove agent to below detectable levels. Dynasafe AB is an international company specializing in technology for destruction of conventional and chemical munitions. Two Dynasafe chambers were installed at the Army's Munitions Assessment and Processing System facility at the Aberdeen Proving Ground in Maryland. The system used in Germany has demonstrated a DRE of >99.9999999 percent DRE with no agent detectable at the exit of the air pollution control system. For this U.S. application, Dynasafe AB proposes to replace its incineration-like oxidation operation with a bulk oxidation facility similar if not identical to the systems to be installed at the main plants at BGCAPP and Pueblo Chemical Agent Destruction Pilot Plant (PCAPP). It also proposes installing a scrubber brine evaporation system, the operation of which will not influence agent removal.

---

[25]Here, Nm^3 means normal cubic meters, with normal standing for 0°C and 1 atm.

[26]Personal communication between Harley Heaton, Vice President for Research, UXB International, Inc., and Margaret Novack, NRC, study director, August 27, 2008.

[27]Information available at www.selasfluid.com.international/web/le/us/likelesfus.nsf/docbyalias-thermal.

[28]Personal communication between Harley Heaton, Vice President for Research, UXB International, Inc., and Douglas Medville, committee member, August 5, 2008.

Copyright © National Academy of Sciences. All rights reserved.

The acidic and basic scrubbers would produce no liquid effluents but would produce up to 500 lb per day of salts as a filter cake. When materials containing mercury or lead are processed, the salts may be determined to be a hazardous waste because they are listed by the Environmental Protection Agency (EPA) or a state or they fail EPA's toxicity characteristic leaching procedure (TCLP) test. If the Dynasafe SDC2000 is used to destroy chemical weapons in Kentucky or Colorado, the salts will be hazardous wastes because they will be listed wastes in those states. Since the rocket motors contain 2 percent lead stearate, the salts resulting from their processing might be hazardous because of the lead. If munitions containing mercury are being processed, a complex-building organosulfide substance (TMT 15) will be added to the scrubber solution to reduce mercury concentrations in the scrubbed gases.[29] The mercury complex would be precipitated from the scrubber solution and would be present in the filter cake.

Offgases of nitrogen, water vapor, and carbon dioxide would be produced up to 150 Nm^3/hr. The scrap metal could be released for unrestricted use.

With the addition of two valves, one on the air inlet to the chamber and one on the exhaust pipe from the chamber, the Dynasafe SDC2000 could conceptually be operated in a hold-test-release mode, although operating it in this way would reduce throughput and would require a redesign of the offgas treatment system. This two-valve concept has been proposed but not built or operated.[30]

Dynasafe proposes removing the SFTs from the rocket motors when they are received from the main plant.[31] During the removal, the fins would be secured to prevent their deployment. Dynasafe says that the firing line would remain shunted and the aft cap of the SFT (made from aluminum), which includes the firing line shunt, would be processed along with the motor. Because the firing line would remain shunted at all times, the operation to separate the rocket motor from the SFT would not present an explosion hazard. The SFT, which contains polychlorinated biphenyls (PCBs), would be shipped offsite to a Toxic Substances and Control Act (TSCA)-approved treatment, storage, and disposal facility (TSDF). Dynasafe AB has stated that a TSCA permit would be needed if the SFT were processed through the Dynasafe SDC2000.[32]

Dynasafe SDC2000 Tests for BGCAPP

To demonstrate that the Dynasafe SDC2000 could be considered for use at BGCAPP, a test plan was developed and testing was conducted at the GEKA plant in Münster, and at the Structo facilities in Kristinehamn, Sweden (UXB International, 2007). Two tests were carried out at GEKA. The main goal of the testing was to determine if the Dynasafe SDC could achieve a 99.9999 percent DE and satisfy the requirements of the state of Kentucky while processing mustard agent chemical weapons.

---

[29]More information on TMT 15 can be found at www.peroxygen-chemicals.com/content/tmt_faq.htm.

[30]Personal communication between Harley Heaton, Vice President for Research, UXB International, Inc., and Douglas Medville, committee vice chair, August 5, 2008.

[31]Personal communication between Harley Heaton, Vice President for Research, UXB International, Inc., and Richard Ayen, committee chair, August 3, 2008.

[32]Personal communication between Harley Heaton, Vice President for Research, UXB International, Inc., and Richard Ayen, committee chair, August 3, 2008.

Copyright © National Academy of Sciences. All rights reserved.

The secondary goal was to determine the operational ability of the Dynasafe SDC to process noncontaminated M67 rocket motors separated from M55 rockets. The goal of the test at the Structo facility was the same as the secondary goal at GEKA, but under slightly different conditions.

The SDC2000 system at Münster was limited by permit to a 2.3 kg TNT-equivalent NEW, which is one fourth of the weight of the propellant in an M55 rocket motor. For a new system constructed for BGCAPP, Dynasafe claims the NEW limit can be up to 10 kg depending on the choice of the inner chamber design specification[33] (see Figure 4-4 in Appendix A). This is just sufficient to withstand the unexpected detonation of a single rocket motor with its 19.3 lb (8.8 kg) of propellant.

Dynasafe proposes dropping the rocket motors into the hot detonation chamber rather than static firing, as proposed by CH2M HILL (see earlier discussion). It is not known if the rocket motors will move around energetically inside the chamber when ignition occurs. The vendor does not believe that this is a serious issue.[34] It expects that the motors don't have enough mass or velocity to damage the 7.5-cm-thick inner chamber wall~~s~~, let alone the 7.5-cm-thick outer chamber wall~~s~~. The vendor has stated that if future testing or calculations show that the issue is real, one solution is to make two cuts: the first to separate the motor from the warhead and the second cut between the forward closure and the propellant to remove the former. If the forward closure is either removed from the motor or is ejected, the Engineering Assessment Attachment of the UXB International 2007 report, states ". . . the case pressure will fall to the ambient (or nearly so), which will drop the burning rate to low values and cause the motor to be non-propulsive" (UXB International, 2007, p. 365).

The Dynasafe technology has obtained a permit to destroy chemical weapons in Germany but not in the United States.

Tests Conducted at GEKA

Mustard Agent HD Test. The HD testing was conducted by operating the SDC unit in its normal mode, which was in compliance with all the environmental permits and procedures approved by the appropriate authorities of Germany. Three HD runs were conducted using 100-mm mortar rounds. For each run, either two or three mortars at a time were fed in a single batch to the SDC approximately three times per hour.

The sampling for HD was at three ports, as shown in Figures 3-4a and 3-4b. These sampling ports were at the exit of the detonation chamber (Sampling Port 1), at the exit of the equalization tank and before the secondary combustion chamber (Sampling Port 1A), and at the exit of the quench (Sampling Port 2).

Before the test could begin, a full day was spent calibrating the in-line flow meters for the air feed to the secondary combustion chamber. These calibrations were made using EPA standard protocols to validate this critical measurement. After this step was completed, the HD tests began. The HD tests were completed over 3 days. On all 3 days the test ran for 3 hours. On the first and third days, the SDC processed three HD

[33]Personal communication between Harley Heaton, Vice President for Research, UXB International Inc., and Margaret Novack, NRC, study director, July 17, 2008.

[34] Site visit by Doug Medville, committee vice chair, to GEKA, Münster, Germany, August 2008.

Copyright © National Academy of Sciences. All rights reserved.

projectiles per feeding, one every 20 minutes for a total of 27. On the second day, only two HD projectiles were fed to the SDC per feeding every 20 minutes for a total of 18.

The results of the 3-day HD tests showed that a DE of >99.999999989 (nine nines) percent was achieved at Sampling Port 2 (after the secondary combustion chamber), with DEs ranging from 99.99481 percent to 99.99508 percent at Sampling Port 1 (before the secondary combustion chamber). A DE of 99.99988 percent was recorded at Sampling Port 1A. The results of this test would satisfy the requirements of the state of Kentucky for a DE of 99.9999 percent.

Propellant Processing Configuration. The purpose of this test was to observe the behavior of propellant and aluminum as found in a noncontaminated M55 rocket motor and to demonstrate the ability of added water to absorb energy released from the propellant as that energy is conveyed to the offgas treatment system. Actual rockets were not used in the test. Instead, a propellant having characteristics similar to those of an M55 rocket and aluminum strips of the same composition as the fins in an M55 rocket were used.

During the testing phase, the SDC was operated at its normal operating conditions and was fed containers with plastic bags holding 2.3 kg propellant, 2.3 kg aluminum pieces, and, in the later tests, water-filled 2-L plastic bottles with screw caps. Each container constituted a single feeding. During the 3 hours of testing, a processing rate of eight feedings per hour was maintained. The contents of each container in each hour were as follows:

Hour 1. 2.3 kg propellant, 2.3 kg aluminum strips, no water.

Hour 2. 2.3 kg propellant, 2.3 kg aluminum strips, 2.3 kg water.

Hour 3. 2.3 kg propellant, 2.3 kg aluminum strips, 4.6 kg water.

There was no problem feeding the propellant or the aluminum or adding the water in 2 of the 3 hours. However, there was a problem with dumping the aluminum scrap. The material did not appear to be burning while inside the unit but began to burn when the chamber was detached from the feed section and rotated prior to dumping. It was decided to continue emptying the chamber. Some pieces of burning aluminum were discharged into the scrap bin, and the fire brigade controlled the burning using CO_2 fire extinguishers. The scrap bin was then left to cool overnight. UXB said the test was a deliberate “overtest” of the ability of the SDC to handle aluminum. It reasoned that an M67 rocket motor normally contains only 0.28 kg aluminum per motor, giving an aluminum:propellant ratio of 3.2:100 rather than the 1:1 ratio in this test. More testing would appear to be warranted.

The addition of the water also had a measurable effect on the peak stack gas flow, which decreased from 950 Nm^3/hr without water to 860 Nm^3/hr when an extra 2.3 kg (per feed) of water was added at every feeding. Also, the gas temperature at the exit of the SDC increased from 350°C to 400°C during the first hour without water but leveled off at 440°C during the second and third hours, when water was added. This shows that the addition of water keeps the SDC from overheating when propellant is fed and decreases

Copyright © National Academy of Sciences. All rights reserved.

the peak flow rates out of the SDC. The use of water could allow an increase in the rate at which munitions are fed to the SDC.

Test Conducted at Structo

The purpose of this testing, which took place in Kristinehamn, Sweden, was to confirm that the SDC was capable of processing noncontaminated M55 rocket motors without jamming or "bridging" of the metal parts when the scrap was removed from the chamber. Fifty simulated motor cases 110 mm in diameter × 1,092 mm long were made. The tubes were as long as the cylindrical cases of the rocket motors plus the closed fins (the uncut tubes). Since there was a possibility that the fins might deploy during the actual processing, 20 of the 50 tubes were modified to simulate a motor case with opened and locked fins (the cut tubes).

During the tests, the SDC was operated in a cold mode, but the simulated rockets would not fit through the feed chamber at the top and had to be hand-fed through a chamber inspection door located on the side of the SDC outer closure. Since the feed chambers are sized according to the size of the different munitions, the vendor claims that this problem should be easily solved by enlarging the feed chamber on the SDC.

With the SDC chamber rotated 90 degrees from its normal vertical orientation, simulated rockets were loaded so as to randomly orient the tubes. Three tests were performed. In the first test, 30 uncut tubes were fed into and removed from the chamber. In the second test, 20 cut tubes with attached parts simulating fins were fed and emptied. Finally, all 50 tubes, both cut and uncut, were fed and emptied. In all three tests the tubes "bridged" in the chamber, hindering their removal. The manufacturer claims this problem can be avoided by redesigning the discharge chute when a new system is built for application at BGAD or Pueblo Chemical Depot (PCD).

Thoughts on Design Changes and Upgrades

The feed system and the scrap metal discharge system should be redesigned to resolve problems with processing whole M55 rocket motors. The redesigned systems would have to be tested to demonstrate their operability. Moreover, it would be prudent to obtain assurances that DDESB would grant approval to destroy whole noncontaminated rocket motors for the use of the SDC2000 system.

EDS TECHNOLOGY

The missions envisioned at the Blue Grass and Pueblo ACWA sites call for an ability to destroy more and larger chemical munitions than can be destroyed by the EDS Phase 1 (EDS-1). In response to the Non-Stockpile Chemical Materiel Project's (NSCMP's) requirement for similar capabilities, the EDS developer, Sandia National Laboratories, designed and fabricated the larger EDS Phase 2 (EDS-2). The discussion that follows focuses on the EDS-2. Because the EDS-2 was not fully described in the

Copyright © National Academy of Sciences. All rights reserved.

2006 International Technologies report, the following section has more detail than the preceding sections on the vendor-supplied technologies.

EDS-2

The EDS-2 can destroy munitions as large as 8-in. chemical projectiles. It can also destroy multiple chemical munitions at one time if the combined TNT-equivalent NEW of the rounds and of the shaped charges does not exceed the 4.8-lb NEW rating of the container.[35] For example, it can destroy multiple rounds of smaller chemical munitions such as 75-mm artillery projectiles, 4.2-in. mortars, and German Traktor rockets.[36] The EDS-2 is depicted in Figure 3-5.

The heart of the EDS-2 is an explosion containment vessel mounted on a flatbed trailer. The EDS-2 vessel has an inside diameter of 28 in., an inner length of 57 in., and a wall thickness of 3.6 in. It is fabricated from a 316 stainless steel forging and the door is fabricated from a separate forging. The vessel is designed to contain hundreds of detonations with explosive ratings of up to 4.8 lb TNT-equivalent NEW. It contains the explosive shock, metal fragments, and chemical agents released during the process that opens the munition. It also serves as a vessel for subsequent neutralization of the chemical agent and residual energetics from the munition. The neutralant is agitated during neutralization by rotating the containment vessel, which is heated by external band heaters.

The operating cycle of the EDS-2 includes loading an unpacked munition, detonating shaped charges to cut open the munition and destroy its energetics, destroying chemical agent with neutralizing chemicals, and cleanup/maintenance.

Loading

The operating cycle begins when an unpacked chemical munition is placed in a fragment suppression system (FSS) consisting of two steel half-cylinders, one above and one below the munition. The FSS takes the impact of small fragments in order to protect the wall of the EDS containment vessel. If multiple chemical munitions are to be treated simultaneously, they are placed in a rack supported in the FSS. The FSS also serves to mount and properly locate the shaped charges used for explosively opening the chemical munition in the EDS. The loaded FSS is placed inside the EDS-2 vessel using a movable loading table. Following preparation of the door sealing surface and installation of a new O-ring, the chamber door is closed and a leak test is conducted. While unpacking is the normal procedure, loading a munition in an overpack into the EDS and detonating through both the overpack and the munition has been done during NSCMP operations.[37]

---

[35]Allan Caplan, System Development Group Leader, NSCMP, CMA, "Explosive destruction system (EDS)—A mobile treatment system," presentation to the committee, May 7, 2008.

[36]U.S. Army, "RCRA pre-application meeting for Pine Bluff explosive destruction system (PBEDS)," briefing on the NSCMP, Pine Bluff, Arkansas, April 22, 2004.

[37]Personal communication between Allan Caplan, System Development Group Leader, NSCMP, CMA, and Margaret Novack, NRC, study director, November 5, 2008.

Copyright © National Academy of Sciences. All rights reserved.

Detonation

The explosives used include linear and conical shaped charges. The linear shaped charges are used to explosively cut open the chemical munition and access its contents for chemical treatment. For treatment of a single munition, a conical shaped charge is used to detonate the burster inside the chemical munition. When multiple munitions are processed, linear charges are used to access the agent as well as the bursters. During the loading process, detonators are attached to the explosive shaped charges and shorted for safety. The detonator lead wires are connected to the external control by wires leading through a pass-through in the door of the containment vessel. Three pairs of wires provide redundant detonation circuits if the first (and second) attempt to initiate the detonation fails. The system is very reliable—the detonation system has never failed in all the field deployments of EDS systems.[38] The chemical safety submittal for the EDS system to the DDESB was approved on a system wide basis, which facilitates use of the EDS in various jurisdictions.

Agent Neutralization

After detonation has taken place, a neutralizing reagent is pumped into the EDS-2 vessel to treat the chemical fill and any remaining explosives. Reagents used in EDS systems include 20 percent aqueous sodium hydroxide for phosgene, 90 percent monoethanolamine (MEA)/water for nitrogen mustard (HN) and sulfur mustard (HD), and 45 percent MEA/water for the nerve agent GB (NRC, 2001). Reagents have also been developed and demonstrated for the destruction of nerve agent VX and the blister agent lewisite.[39] Reactions take place at low pressures and low, but above ambient, temperatures. The solution containing neutralized chemical agent is retained in the vessel until analysis shows that the agent concentration is below its particular VSL. The liquid neutralant is treated as a hazardous waste and shipped to a permitted TSDF for treatment and disposal.

Cleaning and Maintenance

Following treatment of the chemical munition, the EDS-2 vessel is rinsed, cleaned, and inspected. This includes inspection of the sealing surface and the chamber door as well as replacement of the all-metal seal that contains the detonation and the O-ring seals that prevent release of the contents of the vessel. The vessel is washed with chemical reagent, if needed, and rinsed with water and detergent. Upon completion of a disposal campaign, final washes (e.g., water/acetic acid) are made. The resulting aqueous

[38]David Hoffman, CMA, "Transportable detonation chamber (TDC) at Schofield Barracks," presentation to the committee, May 29, 2008.

[39]Trish Weiss, EDS Systems Manager, Project Manager for NSCMP, "Explosive destruction system (EDS) lewisite and VX testing," presentation to the committee that wrote the International Technologies report, September 7, 2005.

Copyright © National Academy of Sciences. All rights reserved.

waste has traditionally been sent to a permitted TSDF for treatment and disposal. At the conclusion of the lewisite tests, the airborne levels of arsenic and mercury were found to be below the 8-hour time-weighted average limit adopted by the American Conference of Governmental Industrial Hygienists.[40]

The typical quantity of liquid wastes is 8-10 gallons per operating cycle. The expected source and nature of these wastes are presented in Table 2-2 of *Systems and Technologies for the Treatment of Non-Stockpile Chemical Warfare Materiel* (NRC, 2002).

Changes in the Process Since Early 2006

The operating sequence that evolved during the production-scale operations at Pine Bluff Arsenal permitted efficient use of crews and equipment (Friedman, 2007). Typically, a day is required to load a set of chemical munitions into an EDS unit, detonate the shaped charges, inject and heat the neutralizing reagent, agitate the chamber to mix the reagent and residual agent, and wet the vessel's inner walls. After the vessel cools overnight, the neutralant is analyzed to establish that it is suitable for further (off-site) treatment and disposal. During the second day of the work cycle, the vessel is drained and rinsed. Then the door is opened, debris is removed, and the vessel is cleaned and inspected to ensure that no damage occurred. The EDS unit is then ready for another cycle of operations. In the interest of safety and for staffing reasons, paired EDS-2 units carry out their detonations on alternate days. In this way, it was possible to destroy up to 30 small chemical munitions, such as 4.2-in. mortars, in a normal week.[41]

Additional Experience Since Early 2006

The original EDS-1 proved its worth in a series of field operations in the continental United States. The sites included Rocky Mountain Arsenal, Colorado (10 GB bomblets); Camp Sibert, Alabama (one CG mortar round); and Spring Valley in Washington, D.C. (15 mustard agent HD artillery rounds). One EDS-1 and two EDS-2s have been used in the ongoing project to destroy 1,220 recovered chemical munitions at Pine Bluff Arsenal (PBA), Arkansas, as described below. To update the history of EDS units, operations since 2004 are tabulated in Table 3-6.

The campaign at Pine Bluff is especially relevant to the potential ACWA applications because it involves the destruction of hundreds of old munitions, some of which were not suitable for safe dismantling. At least partly in response to NRC recommendations, the Army discontinued plans for a fixed facility at PBA (NRC, 2004). Instead, a team of mobile EDS units was deployed to PBA to destroy the 1,220 World War II chemical munitions stored there. Most of the 4.2 in.-mortars were empty, but more

---

[40]Trish Weiss, EDS Systems Manager, PMNSCMP, "Explosive destruction system (EDS) lewisite and VX testing," presentation to the committee that wrote the International Technologies report, September 7, 2005.

[41]Allan Caplan, System Development Group Leader, NSCMP, CMA, "Explosive destruction system (EDS)—A mobile treatment system," presentation to the committee, May 7, 2008.

Copyright © National Academy of Sciences. All rights reserved.

than 100 contained blister agents or unknown liquids. Only a few of the German Traktor rockets contained both chemical agent and propellant. There were also many other miscellaneous chemical munitions and samples.

In the destruction operations, munitions removed from storage were inspected to determine whether they contained agent and/or energetics and if they did, which type of agent/energetic was involved. Those containing agent or energetics were destroyed in one of the three EDS units (one EDS-1, two EDS-2s) deployed to Pine Bluff. Typically, only two were operated simultaneously. The third was kept on standby or was dispatched for use at other locations.

Future Plans

To accommodate future requirements for the EDS concept, the Army and Sandia National Laboratories have generated conceptual designs for a larger, more productive EDS in Phase 3 of the EDS program (EDS-3). The development work has not yet been funded pending identification of an application in the NSCMP—for instance, a large burial site, where many hundreds of chemical munitions might need to be treated. The requirements fall into two categories:

- A larger double-chambered EDS vessel that would accommodate more chemical munitions. One objective would be to destroy up to four 155-mm chemical projectiles simultaneously, thus increasing the throughput with these large chemical munitions. Another would be to destroy a complete M55 rocket, including agent and propellant, although this would necessitate enhancing the explosion containment capacity. It is forecast that an EDS-3 version could destroy up to 12 mortar rounds or 12 75-mm projectiles at once. Another high-throughput concept would employ two double-chamber vessels that would be able to process 12 4.2-in. mortars at a time and to complete five process cycles per week (60 mortars).[42]
- A new heating system based on the injection of steam into the containment vessel, which would entail replacing the external band system for heating the EDS-2 chamber. When combined with an active cooling system, this approach is expected to allow one detonation every day instead of one every other day by speeding the heating and cooling processes, which are currently considered to be rate limiting.

[42]Allan Caplan, System Development Group Leader, NSCMP, CMA, "Explosive destruction system (EDS)—A mobile treatment system," presentation to the committee, May 7, 2008.

Copyright © National Academy of Sciences. All rights reserved.

REGULATORY APPROVAL AND PERMITTING

General

The primary environmental regulations that apply to the treatment of chemical munitions include the National Environmental Policy Act (NEPA), the Clean Air Act (CAA), and RCRA. In addition, DOD Ammunition and Explosive Safety Standards (DOD 6055.9-STD) mandate DDESB approval of a Site Safety Submission for each application, although system wide approval can be obtained allowing use anywhere in the United States with minimal supplementary information.

NEPA requirements apply equally to all the EDTs. Under NEPA, the federal government must evaluate the environmental consequences of proposed actions and alternatives at federal facilities, considering public input. The NEPA process for ACWA was initiated shortly after passage of the National Defense Appropriations Act of 1997 (Public Law 104-208), which established the ACWA program. In 2002, the ACWA program published a final environmental impact statement (EIS). Pursuant to the EIS, a Record of Decision was issued in July of that year that called for neutralization followed by biotreatment at PCAPP and in February of 2003, for a Record of Decision calling for neutralization followed by supercritical water oxidation (SCWO) at BGCAPP.

The EDTs were not evaluated in the draft ACWA EIS of 2001. These technologies will need to be evaluated under NEPA. While an EIS could be required for these technologies, if their application is determined to have no significant impact, an environmental assessment could be all that is needed. Environmental assessments typically take far fewer resources and much less time to prepare than an EIS. Because the NEPA process can take several years to complete, evaluation of NEPA requirements seems desirable for the use of EDTs at Pueblo and Blue Grass.

From a regulatory perspective, all the EDTs evaluated in this report should be able to meet environmental regulatory requirements and achieve permitted status at both BGCAPP and PCAPP. The EDS has received permits in several states for destruction of chemical weapons. The TC-60 TDC has received a RCRA permit from the state of Hawaii for the destruction of chemical weapons. However, each EDT has some nuances that pose a challenge to regulatory approval and permitting. RCRA insists that a technology must demonstrate that it will be sufficiently protective of human health and the environment[43] and has stringent requirements for public involvement in the permitting process. Also, the ACWA program should know that thermal treatment technologies for treating EDT offgas may be of particular concern to the public.

Application of EDTs at ACWA sites will require RCRA operating permits. However, RCRA provides a research, development, and demonstration (RD&D)

[43]The EDTs, being technologies that do not fit into established waste treatment categories under RCRA, will probably be permitted under RCRA Subpart X—Miscellaneous Units. Subpart X entails a performance demonstration. Rather than meeting set requirements, permittees for Subpart X units must demonstrate that technologies will be sufficiently protective of human health and the environment.

Copyright © National Academy of Sciences. All rights reserved.

mechanism for obtaining permits for some technologies, particularly those that are new or that are intended to be used for waste materials whose destruction using the technology has not been yet demonstrated. The RD&D permit mechanism gives a permittee a lot of flexibility to adjust process and conditions to maximize treatment effectiveness, throughput, and efficiency. For both PCAPP and BGCAPP, the Army's plan, approved by state regulators, has been to begin the neutralization/biotreatment and neutralization/SCWO (respectively) processes under an RD&D permit and then, once the technologies have been demonstrated and become more routine, to transition seamlessly to a full RCRA operating permit.[44]

For the noncontaminated rocket motors, another concern involves PCB contamination of the M55 rocket SFTs. As noted in Chapter 1, M55 rocket SFTs are known to be contaminated with PCBs. If SFTs containing >50 ppm PCBs were to be treated using any of the EDTs along with or separately from the rocket motor itself, the EDT would require a facility permit under 40 CFR Part 761 of the TSCA. However, ACWA intends to separate the rocket warheads from their SFT segments, and the latter are to be disposed of off-site at a permitted TSCA facility. Also, Dynasafe has said it does not intend to process the SFTs through the Dynasafe SDC2000 facility.[45] The situation for the SFT segments encasing the noncontaminated rocket motors had not been resolved at the time this report was being prepared.[46,47]

Lastly, a regulatory concern with all EDTs, including the EDS, involves the disposition of heavy metals that may be present in the munitions to be treated. For example, lead is a component of the propellant used for the M55 rockets. Mercury is known to be a contaminant in some of the mustard agent formulations. The Army and the technology providers must ascertain what issues, if any, must be addressed in managing whatever heavy metals may be present in secondary wastes.

TECHNOLOGY-SPECIFIC REGULATORY CONSIDERATIONS

The following subsections provide information on the regulatory situation for each of the EDTs under consideration. As mentioned in the Preface, useful input on this topic was obtained in discussions with Colorado and Kentucky regulators. Many questions were asked about the acceptability of certain features of the various EDTs to the regulators. In both states and for many, if not most, of the questions asked, the response by a regulator began with the words "The public will. . . ." or "The public will not. . . ." Regulators in both states made it very clear that activist public positions and regulatory decision making are inextricably linked.

---

[44]Teleconference with Colorado Department of Public Health and Environment, May 22, 2008; teleconference with Kentucky Department of Environmental Protection, July 22, 2008.

[45]Personal communication between Harley Heaton, Vice President for Research, UXB International, Inc., and Richard Ayen, committee chair, August 3, 2008.

[46]As also noted In Chapter 1, some of the SFT segments encasing some rocket motors are difficult to remove from the rocket motor body. However, Noblis claims to have developed and tested an effective procedure for removing the SFT segments from the rocket motors.

[47]Personal communication between Tom Cain, Senior Principal Engineer, Noblis, and Richard Ayen, committee chair, September 19, 2008.

Copyright © National Academy of Sciences. All rights reserved.

TDC

The TDC system destroys the bulk of the agent and explosives in the chemical munitions by detonating donor explosives wrapped around the munitions. The agent and explosives are destroyed by the donor explosive detonation, achieving an initial DE of 99.99 percent for the agent. With the addition of thermal treatment of the offgas by catalytic oxidation (CATOX), the system achieves a DRE in excess of 99.9999 percent. Because of the offgas treatment system, the TDC would need to be added to the existing Title V Clean Air Act permit held by both BGCAPP and PCAPP; however, since the air emissions are considered a minor release and an addition to the air permit is not expected to be an issue.

As indicated previously, the TDC has been operated for munitions containing phosgene and chloropicrin chemical weapons in the United States (Schofield Barracks, Hawaii) under a RCRA emergency permit. Simpler versions of the technology have been operated at several locations within the United States for conventional weapons. The TDC technology, because it has not yet been applied for chemical weapons other than phosgene and chloropicrin in the United States, should be a good candidate for beginning operations through the use of an RD&D permit.

Considering that the TDC produces a relatively small amount of secondary waste, including scrap metal, pea gravel, and spent lime, off-site treatment and disposal of secondary wastes is not going to be a big concern. Much less secondary waste will be produced by the TDC than by the planned neutralization of the bulk of the chemical weapons at both BGCAPP and PCAPP. In addition, off-the-shelf treatment technologies are available in the United States for treatment of the secondary wastes produced by the TDC.

The primary concern with the TDC from a RCRA permitting perspective is the operation of the CATOX thermal treatment unit and the lack of a hold-test-release capability for the offgas. There may be some concern also about the formation of dioxins and furans in the treated offgas. Technically, the initial detonation combined with catalytic oxidation should preclude agent and other organics, including dioxins and furans, from being released into the atmosphere untreated.

The CATOX technology, while a form of thermal treatment, is not an incineration technology. It must also be remembered that the bulk of the destruction of the chemical agent within the munition (on the order of 99.99 percent) is accomplished by the initial detonation. The treatment of the offgas is intended to destroy the 0.01 percent of agent potentially remaining in the offgas. From this perspective, that the TDC employs a CATOX process for treatment of the offgas should be a very minor concern to the public. Special studies assessing risk, such as multipathway health-risk assessments (MPHRAs), which are often conducted for incinerator operations, are not necessary. Catalytic oxidation is not incineration. From the regulatory perspective, as long as the technology can be shown to protect human health and the environment, there should be no impediment to use of a CATOX technology for treatment of the offgas. However, if the TDC were operated with a hold-test-release capability, it would probably be more palatable to public interest groups.

Copyright © National Academy of Sciences. All rights reserved.

The TDC also has received DDESB approval for its application at Schofield Barracks, Hawaii. Because the system does not have systemwide approval, DDESB would have to approve its application at Pueblo or Blue Grass.

DAVINCH

The DAVINCH system destroys the vast majority of the agent and explosives in the chemical munitions by detonating donor explosives wrapped around the munitions. The agent is destroyed by this detonation, which achieves an initial DE of >99.9999 percent. With the addition of cold plasma for thermal treatment of the offgas, the system achieves a DRE in excess of 99.999999 percent. Because of the offgas treatment system, the DAVINCH would need to be added to the existing Title V CAA permit held by both BGCAPP and PCAPP; however, the air emissions are considered a minor release, and achieving the addition to the air permit is not expected to be an issue.

As indicated previously, the DAVINCH has not been operated for chemical weapons or any other explosive waste materials in the United States. For this reason, it should be an ideal candidate for beginning operations via an RD&D permit.

Considering that the DAVINCH produces a relatively small amount of secondary wastes, including scrap metal, dust, calcium chloride, and aluminum oxide, off-site treatment/disposal of secondary wastes is not going to be a primary concern. Much less secondary waste is produced by the DAVINCH than is produced by the planned neutralization of the bulk of the chemical weapons at both BGCAPP and PCAPP. In addition, off-the-shelf treatment technologies are available in the United States for treatment of the secondary wastes produced by the DAVINCH.

Because the DAVINCH employs a hold-test-release capability for the offgas, hold-test-release is not going to be a concern to public interest groups and should make the technology more palatable to regulators and public interest groups. The cold plasma technology, while a form of thermal treatment, is not an incineration technology. It must also be remembered that the bulk of the destruction of the chemical agent within the munition (on the order of 99.9999 percent) is accomplished by the initial detonation. The treatment of the offgas destroys more than 99.99 percent of the 0.0001 percent of agent potentially remaining in the offgas. From this standpoint, a cold plasma oxidation technology for treating the DAVINCH offgas should be of very little concern to the public. From the regulatory perspective, as long as the technology can be shown to be protective of human health and the environment, there should be no impediment to use of a cold plasma technology for treatment of the offgas.

Because the DAVINCH, like the TDC, has not received DDESB approval of a site safety submission for application within the United States, DDESB approval would be required to apply it at Pueblo or Blue Grass.

Dynasafe SDC

The Dynasafe system destroys most of the agent and explosives in the chemical munitions by deflagration or detonation and subsequent heating of the munitions in an electrically heated containment vessel. No donor charges are needed. The heated

Copyright © National Academy of Sciences. All rights reserved.

containment vessel causes deflagration or detonation of the explosives within the munition, releasing agent. Some treatment is accomplished by the initial deflagration or detonation, but the bulk of treatment is accomplished by the heat imposed from within the containment vessel, achieving an initial DE of 99.99 percent. With the addition of the secondary combustion afterburner for thermal treatment of the offgas, the Dynasafe system at Münster (Germany) achieves a DRE in excess of 99.9999 percent. However, the proposed U.S. version of the Dynasafe system would employ an FTO and there would be no secondary combustion chamber. Because of the offgas treatment system, the SDC would need to be added to the existing Title V CAA permit held by both BGCAPP and PCAPP; however, the air emissions are considered a minor release and getting the SDC added to the air permit is not expected to be a problem.

As already mentioned, the Dynasafe technology has not been operated for chemical weapons or other waste explosives in the United States and should be an ideal candidate for beginning operations via an RD&D permit.

Considering that the Dynasafe technology would produce a relatively small amount of secondary wastes, including scrap metal and a scrubber salts filter cake, off-site treatment and disposal of secondary wastes is not going to be much of a concern. The amount of secondary waste produced by the proposed U.S. version of the Dynasafe system will be much smaller than the amount of waste produced by the planned neutralization of the bulk of the chemical weapons at both BGCAPP and PCAPP. In addition, off-the-shelf treatment technologies are available in the United States for treatment of the secondary wastes produced by the SDC.

The main concern with the Dynasafe technology from the perspective of RCRA permitting would be the operation of the secondary combustion thermal treatment unit and the absence of a hold-test-release capability for the offgas. Technically, because the secondary combustion unit will employ an open flame, it would be defined as incineration. This could be a concern for public interest groups, which have long opposed incineration technologies, particularly for chemical agents. To avoid this, Dynasafe has proposed the use of a flameless thermal oxidizer in place of secondary combustion.

Technically, the initial deflagration or detonation combined with thermal treatment and secondary combustion should preclude agent and other organics from being released into the atmosphere untreated. The bulk of the destruction of the chemical agent within the munition (on the order of 99.99 percent) is accomplished by thermal treatment within the system. The treatment of the offgas is intended to destroy the 0.01 percent of agent that might remain in the offgas. From this perspective, whether the Dynasafe system employs secondary combustion or a flameless thermal oxidizer for treatment of the offgas should be a very minor concern to the public. But because the secondary combustion technology is incineration, if secondary combustion is used for the Dynasafe, the regulatory authorities may consider requiring in-depth studies, such as an MPHRA. Again, considering the fact that the offgas treatment technology is to be used to treat only the 0.01 percent of agent that may remain following initial treatment, the committee believes that a MPHRA is unnecessary. However, if Dynasafe employs secondary combustion and if the regulatory authorities determine that some type of risk assessment is needed, a screening-level MPHRA should suffice— a detailed MPHRA is not required unless the screening-level MPHRA shows the potential for concern. Of

Copyright © National Academy of Sciences. All rights reserved.

course, if a flameless system (which is not incineration) is used, a study assessing risk, often conducted for incinerator operations, is not necessary.

From the regulatory perspective, as long as the technology chosen for treatment of the offgas can be shown to be protective of human health and the environment, there should be no impediment to its use. However, if the Dynasafe system employs secondary combustion technology, a hold-test-release capability becomes more important for public interest groups. Even if a flameless system is used, the presence of a hold-test-release capability would make the technology more acceptable to the public. As reported by Dynasafe, the system can be operated in a hold-test-release mode, but when operated in this manner it may not be as productive as the earlier design.

The Dynasafe system also has not received DDESB approval for its application in the United States, which it would need for application at Pueblo or Blue Grass.

EDS

The EDS uses small shaped charges to open the chemical munition and consume the explosive in the burster and fuze. The agent is destroyed by the subsequent neutralization process, achieving a DRE of >99.9999 percent. Because no offgas treatment system is needed for the EDS, no addition to the CAA Title V permit for BGCAPP or PCAPP is needed. Similarly, because there is no offgas treatment, the potential production of dioxins and furans is not a concern.

The EDS has been operated under RCRA permits at a variety of locations throughout the United States, and regulators, the general public, and public interest groups have achieved a level of comfort with it. The system can therefore be operated under a full operating permit; a RCRA RD&D permit is not needed.

The main concern with the EDS from a RCRA permitting perspective is the amount of secondary waste, specifically hydrolysate, produced when chemical weapons are treated. Because it is a RCRA hazardous waste that may contain agent degradation products, it will require subsequent treatment at a RCRA-permitted TSDF. The hydrolysate produced by the system can be tested for the presence of agent prior to subsequent management, effectively providing the system with a hold-test-release capability.

Although the EDS produces large amounts of secondary wastes (primarily the 8 to 10 gallons of monoethanolamine (MEA)-based hydrolysate per detonation), the amount produced is much less than the amount of aqueous hydrolysate produced by the planned neutralization of the bulk of the chemical weapons at both BGCAPP and PCAPP. The disposal of EDS wastes by shipment to a TSDF for treatment has not been a problem in the many jurisdictions in which the EDS has operated. While environmental regulators will require that TSDFs be permitted for treatment of the waste hydrolysate, there is typically very little concern about the capability of the TSDFs to safely and effectively treat the waste. However, the general public and public interest groups may take issue with shipping the EDS hydrolysate to offsite locations, even considering its relatively small amount. If the EDS is selected for one or more applications at PCAPP, however, the Army will need to dispose of the MEA-based hydrolysate produced by the EDS in a treatment facility other than the planned biotreatment operation at PCAPP.

Copyright © National Academy of Sciences. All rights reserved.

The EDS also enjoys the advantage of having already achieved system wide approval of the Site Safety Submission from the DDESB. None of the other technologies evaluated in this report have received this type of broad approval.

REFERENCES

Asahina J., K. Koide, T. Shirakura, M. Ouchi, and T. Tada. 2007. Study on controlled detonation chamber system of chemical weapons (II): Implosion and sequential detonation. Science and Technology of Energetic Materials 68(2): 48-54.

BGCAPP (Blue Grass Chemical Agent Destruction Pilot Plant). 2004. Resource, Conservation, and Recovery Act Research, Development and Demonstration Permit Application. Richmond, Ky.: Blue Grass Army Depot.

Beerens, K., B. Vanclooster, and M. Katayama. 2008. Construction Record of DAVINCH at Poelkapelle. Presented to the 11th International Chemical Weapons Demilitarisation Conference in Interlaken, Switzerland, May. Available online at http://www.dstl.gov.uk/conferences/cwd/2008/index.php. Last accessed on February 17, 2009.

Bixler, B. 2006. Controlled detonation of chemical munitions. Presented at the 9th International Chemical Weapons Demilitarisation Conference in Luneburg, Germany, May. Available online at http://www.dstl.gov.uk/conferences/cwd/2006/index.php. Last accessed on February 17, 2009.

DiBerardo, R. 2007. Environmental characterization of the TC-60 Controlled Detonation Chamber. Presented at the 10th International Chemical Weapons Demilitarisation Conference in Brussels, Belgium, May. Available online at http://www.dstl.gov.uk/conferences/cwd/2007/. Last accessed on February 17, 2009.

DiBerardo, R., T.A. Blades, and N. McFarlane. 2007. Demonstration/Validation of the TC-60 Controlled Detonation Chamber Porton Down, U.K., Final Demonstration Test Report, ECBC-SP-021, June. Aberdeen Proving Ground, Md.: Edgewood Chemical and Biological Center.

Friedman, L. 2007. Pine Bluff Explosive Destruction System (PBEDS). Presented at the 10th International Chemical Weapons Demilitarisation Conference in Brussels, Belgium, May. Available online at http://www.dstl.gov.uk/conferences/cwd/2007/. Last accessed on February 17, 2009.

Katayama, M., and M. Ueda. 2006. Optimal treatment of detonation chamber off-gas. Presented at the 9th International Chemical Weapons Demilitarisation Conference in Luneburg, Germany, May. Available online at http://www.dstl.gov.uk/conferences/cwd/2006/index.php. Last accessed on February 17, 2009.

Kitamura, R., M. Ueda, and J.K. Asahina. 2007. Surrogate test for M55 nerve agent rocket mortar by DAVINCH. Presented at the 10th International Chemical Weapons Demilitarisation Conference in Brussels, Belgium, May. Available online at http://www.dstl.gov.uk/conferences/cwd/2007/. Last accessed on February 17, 2009.

Copyright © National Academy of Sciences. All rights reserved.

Lefebvre, M.H. 2008. Controlled Detonation Chamber (CDC)—Achievements & Challenges. Presented to the 11th International Chemical Weapons Demilitarisation Conference in Interlaken, Switzerland, May. Available online at http://www.dstl.gov.uk/conferences/cwd/2008/index.php. Last accessed on February 17, 2009.

Orfeuil, M. 1987. Electric Process Heating: Technologies/Equipment/Applications. Columbus, Ohio: Battelle Press.

NRC (National Research Council). 2001. Evaluation of Alternative Technologies for Disposal of Liquid Wastes from the Explosive Destruction System. Washington, D.C.: The National Academies Press.

NRC. 2002. Systems and Technologies for the Treatment of Non-Stockpile Chemical Warfare Materiel. Washington, D.C.: The National Academies Press.

NRC. 2004. Assessment of the Army Plan for the Pine Bluff Nonstockpile Facility. Washington, D.C.: The National Academies Press.

NRC. 2006. Review of International Technologies for Destruction of Recovered Chemical Warfare Materiel. Washington, D.C.: The National Academies Press.

Stock, T.H., H. Heaton, H. Weigel. And H. Moskal. 2007. The Static Detonation Chamber—Agent destruction efficiency in a 10 cm HD mortar destruction campaign. Presented at the 10th International Chemical Weapons Demilitarisation Conference in Brussels, Belgium, May. Available online at http://www.dstl.gov.uk/conferences/cwd/2007/. Last accessed on February 17, 2009.

UXB International, Inc. 2007. Static Detonation Chamber Testing Using a Dynasafe SDC 2000. Final Report. Richmond, Ky.: Blue Grass Chemical Agent Destruction Pilot Plant.

FIGURE 3-1 The DAVINCH Glid-Arc cold plasma thermal oxidizer.
SOURCE: Personal communication between Frank Augustine, Chief Technology Officer, Versar, Inc., and Margaret Novack, NRC, study director, July 7, 2008.

FIGURE 3-2 Process flow diagram for DAVINCH. SOURCE: Joseph Asahina, Chief of Technology, Kobe Steel, Ltd., Ryusuke Kitamura, Kobe Steel Ltd., and Koichi Hayashi, Kobe Steel, Ltd., "DAVINCH detonation system—Recent improvements and path forward," presentation to the committee, May 28, 2008.

FIGURE 3-3 Items Destroyed in the DAVINCH DV50 at Poelkapelle, Belgium.
SOURCE: Adapted from Beerens et al., 2008.

FIGURE 3-4a Dynasafe SDC2000 flow diagram showing sampling ports. ET, equalization tank. SOURCE: UXB International, 2007.

FIGURE 3-4b Dynasafe SDC2000 flow diagram showing sampling ports (continued). ID, induction. SOURCE: UXB International, 2007.

Copyright © National Academy of Sciences. All rights reserved.

FIGURE 3-5 Drawing of the EDS-2 vessel on its trailer. SOURCE: Allan Caplan, System Development Group Leader, Non-Stockpile Chemical Materiel Project, CMA, "Explosive destruction system (EDS)—A mobile treatment system," presentation to the committee, May 7, 2008.

Copyright © National Academy of Sciences. All rights reserved.

TABLE 3-1 Concentrations of Volatile Organic Compounds at the Inlet and Outlet of Air Filtration Unit #2 of the TDC of CH2M HILL (parts per billion by volume)

Volatile Organic Compound	Inlet Concentration	Outlet Concentration	Ambient Concentration
Methane	756.7	810.3	637.5
Propane	3,437.5	3,142.8	ND
Acetone	99.2	624.0	1,416.3
Chloromethane	4.3	4.1	4.0
Dichlorodifluoromethane	11.7	11.5	14.1
Methyl ethyl ketone	11.6	53.0	47.6
Toluene	6.0	184.8	105.1
Trichlorofluoromethane	7.4	6.1	8.3

NOTE: ND, nondetect.

SOURCE: DiBerardo, 2007.

Copyright © National Academy of Sciences. All rights reserved.

TABLE 3-2 Emissions to the Air of Metals from the TDC of CH2M HILL

Metal	Emission Rate (lb/hr)
Antimony	<0.0000158
Arsenic	0.000439
Barium	<0.00000342
Beryllium	<0.00000191
Cadmium	0.0000145
Chromium	<0.0000381
Cobalt	<0.00000624
Copper	<0.0000123
Iron	0.00138
Lead	<0.00000816
Mercury	0.00000767
Nickel	<0.0000316
Selenium	<0.000047
Silver	<0.00000416
Thallium	<0.0000233
Vanadium	0.0000323
Zinc	0.000285

SOURCE: DiBerardo, 2007.

TABLE 3-3 Stack Emissions of Particulate Matter, Dioxin/Furan, HCl, and Semivolatile Organic Compounds from the TDC of CH2M HILL

Emission Type	Amount
Particulate matter	0.03 lb/hr
Dioxin/furan	10^{-13} g/Nm^3 TEQ
HCl	0.02 ppmv
Semivolatile organic compounds	<0.03 ppbv

NOTE: TEQ, [international] toxic equivalency (the amount of 2,3,7,8-TCDD [2,3,7,8-tetrachlorodibenzo-p-dioxin] with toxicity equivalent to the complex mixture of 210 dioxin and furan isomers with 4 to 8 chlorine atoms found in flue gases).

SOURCE: DiBerardo, 2007.

Copyright © National Academy of Sciences. All rights reserved.

TABLE 3-4 Selected Total Metals Concentrations in Solid Waste from TDC of CH2M HILL (milligrams per kilogram)

Test Parameter Total Metals	Fresh Pea Gravel	Fresh Lime	Spent Pea Gravel (from Detonation Chamber Floor)	Spent Lime (from Lime Injection Systems)
Barium	5	100	31	50
Chromium total	8.81	40	53	23.8
Copper	4	80	9,380	3,400
Iron	14,300	885	30,100	5,440
Lead	2.17	20	1,840	4,400
Nickel	5.75	80	84.3	24.8
Zinc	15.6	24.4	3,850	1,900

NOTE: No significant metal increase for antimony, arsenic, beryllium, cadmium, cobalt, selenium, silver, thallium, or vanadium

SOURCE: DiBerardo, 2007.

Copyright © National Academy of Sciences. All rights reserved.

TABLE 3-5 Munition Destruction by DAVINCH at Poelkapelle, Belgium, through July 14, 2008

Description of Procedure	Munition Size (All Clark Fill)			
	7.7 cm Shell	10.5 cm Shell	15 cm Shell	21 cm Shell
Estimated total number of munitions	750	1,750	200	25
Shot configuration	Two packs, 3 rounds/pack	Two packs, 3 rounds/pack	One/shot	One/shot
Explosive loading, kg TNT-equivalent NEW	14.3	20.9	19.6	21.3
Number destroyed in acceptance testing, January-February 2008	102	48	17	10
Number of shots, acceptance testing	17	8	17	10
Average number/shot, acceptance testing	6	6	1	1
Shots/day, acceptance testing	3	3	2.5	2.5
Total number destroyed as of July 14, 2008	102	486	26	25

SOURCES: Beerens et al., 2008; Joseph Asahina, Chief of Technology, Kobe Steel, Ltd., Ryusuke Kitamura, Kobe Steel, Ltd., and Koichi Hayashi, Kobe Steel, Ltd., "DAVINCH detonation system—Recent improvements and path forward," presentation to the committee, May 28, 2008; personal communication between Joseph Asahina, Chief of Technology, Kobe Steel, Ltd. and the committee, July 23, 2008.

Copyright © National Academy of Sciences. All rights reserved.

TABLE 3-6 Recent Deployments of EDS Units

Date	Site	Munitions Destroyed
2004	Dugway Proving Ground (Utah)	15 GB- or H-filled RCWM; 7 DOT bottles
2004-2006	Dover Air Force Base	9 HD 75-mm projectiles
2005	Aberdeen Proving Grounds (Maryland)	8 cylinders (7 AC, 1 CK)
2006 to present	Pine Bluff Arsenal	1,065 to date; 4.2 in. mortars (HD); German Traktor rockets (HN-1)

NOTE: AC, hydrogen cyanide; CK, cyanogen chloride; HD, distilled mustard; HN-1, nitrogen mustard; RCWM, recovered chemical warfare munitions.

Copyright © National Academy of Sciences. All rights reserved.

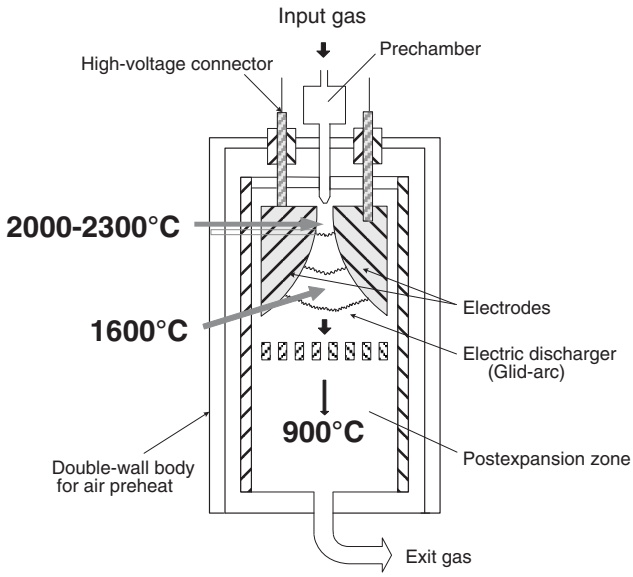

FIGURE 3-1 The DAVINCH Glid-Arc cold plasma thermal oxidizer.
SOURCE: Personal communication between Frank Augustine, Chief Technology Officer, Versar, Inc., and Margaret Novack, NRC, study director, July 7, 2008.

Copyright © National Academy of Sciences. All rights reserved.

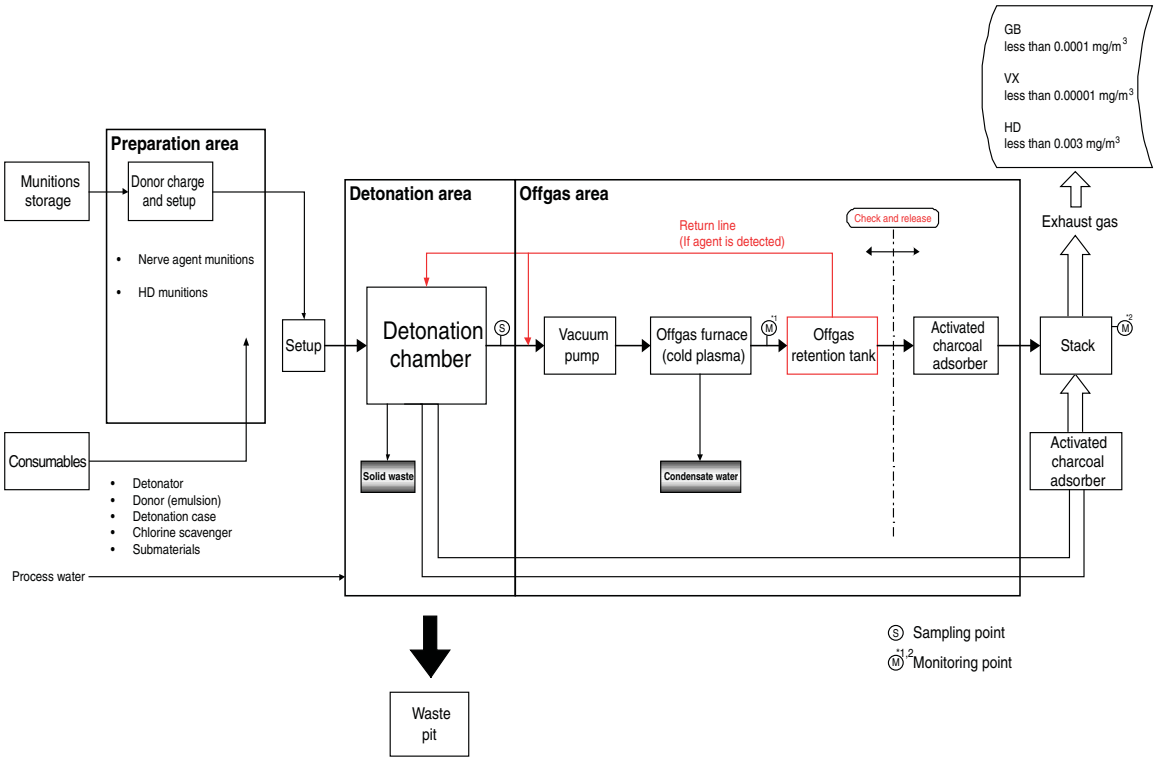

FIGURE 3-2 Process flow diagram for DAVINCH. SOURCE: Joseph Asahina, Chief of Technology, Kobe Steel, Ltd., Ryusuke Kitamura, Kobe Steel Ltd., and Koichi Hayashi, Kobe Steel, Ltd., "DAVINCH detonation system—Recent improvements and path forward," presentation to the committee, May 28, 2008.

Copyright © National Academy of Sciences. All rights reserved.

	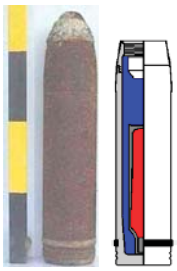	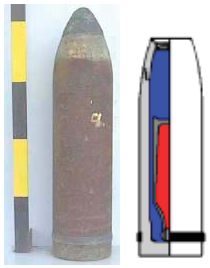		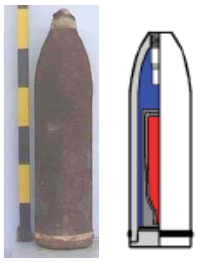		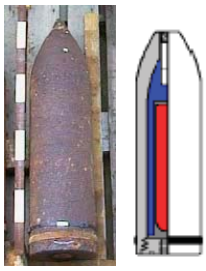
Munition type	7.7 cm CLARK	10.5 cm CLARK Gr 15	10.5 cm CLARK Lg F H Gr 15	15 cm CLARK Gr 12 Verst.	15 cm CLARK Gr 12 n/a	21 cm CLARK
Typical mass of energetics TNT NEW (kg)	0.675	0.850	1.330	2.500	2.750	8.380
Typical mass of OCW agent (kg)	0.135	0.368	0.290 or 0.410	0.800	1.480	3.850
Estimated items (2008-2010)	750	1,750		200		25

FIGURE 3-3 Items Destroyed in the DAVINCH DV50 at Poelkapelle, Belgium.
SOURCE: Adapted from Beerens et al., 2008.

Copyright © National Academy of Sciences. All rights reserved.

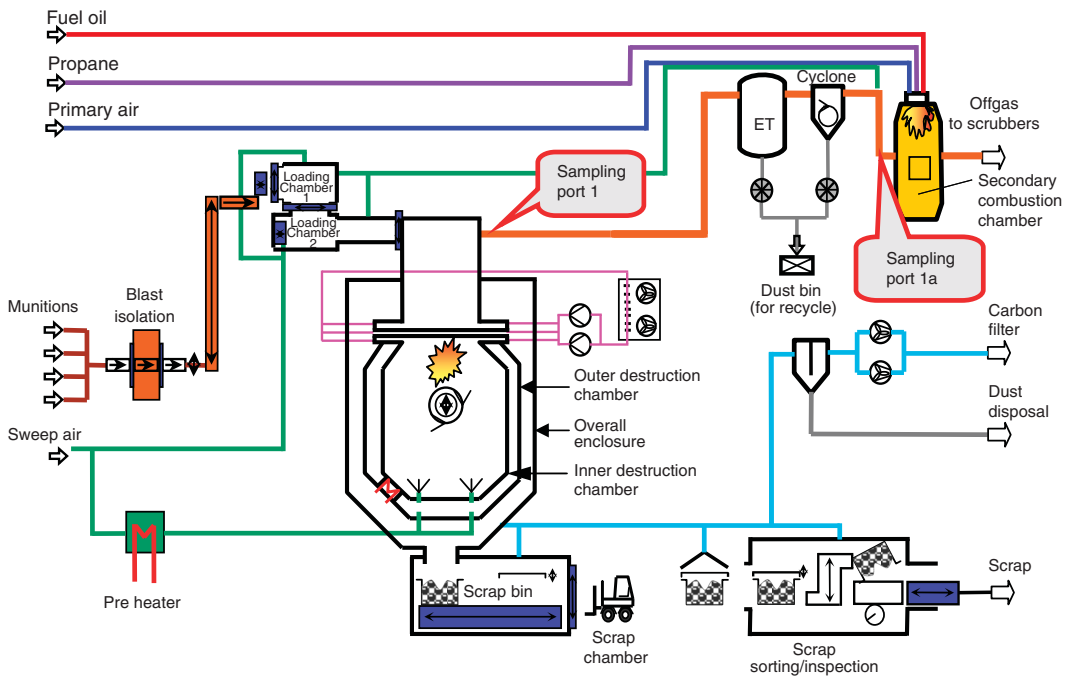

FIGURE 3-4a Dynasafe SDC2000 flow diagram showing sampling ports. ET, equalization tank. SOURCE: UXB International, 2007.

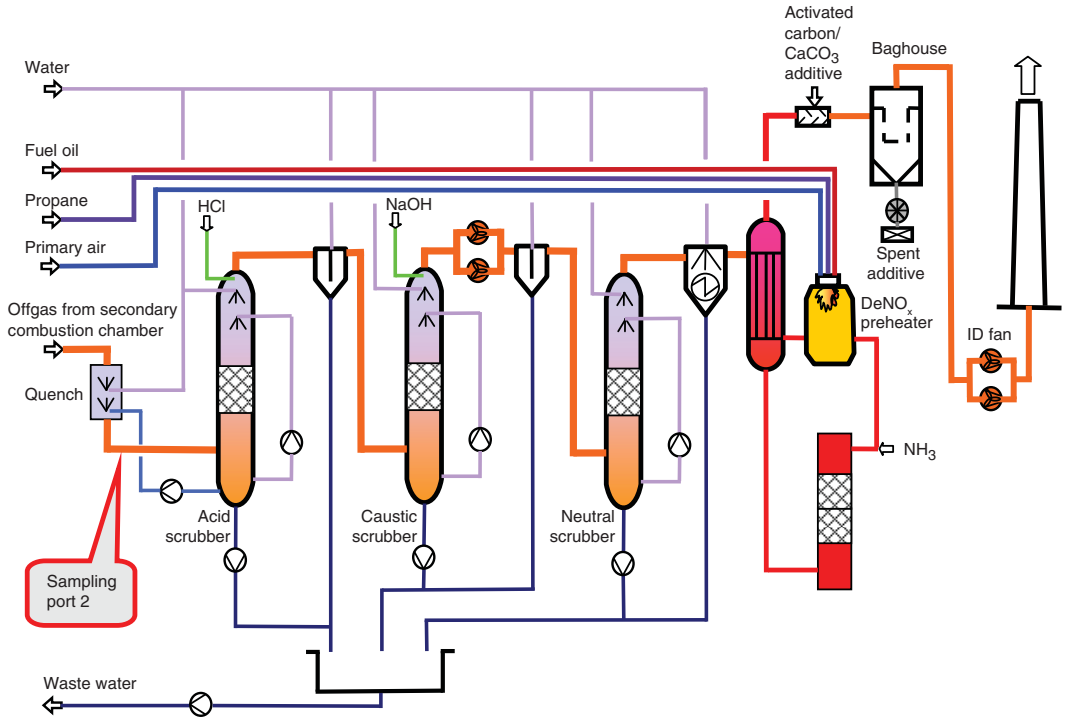

FIGURE 3-4b Dynasafe SDC2000 flow diagram showing sampling ports (continued). ID, induction. SOURCE: UXB International, 2007.

Copyright © National Academy of Sciences. All rights reserved.

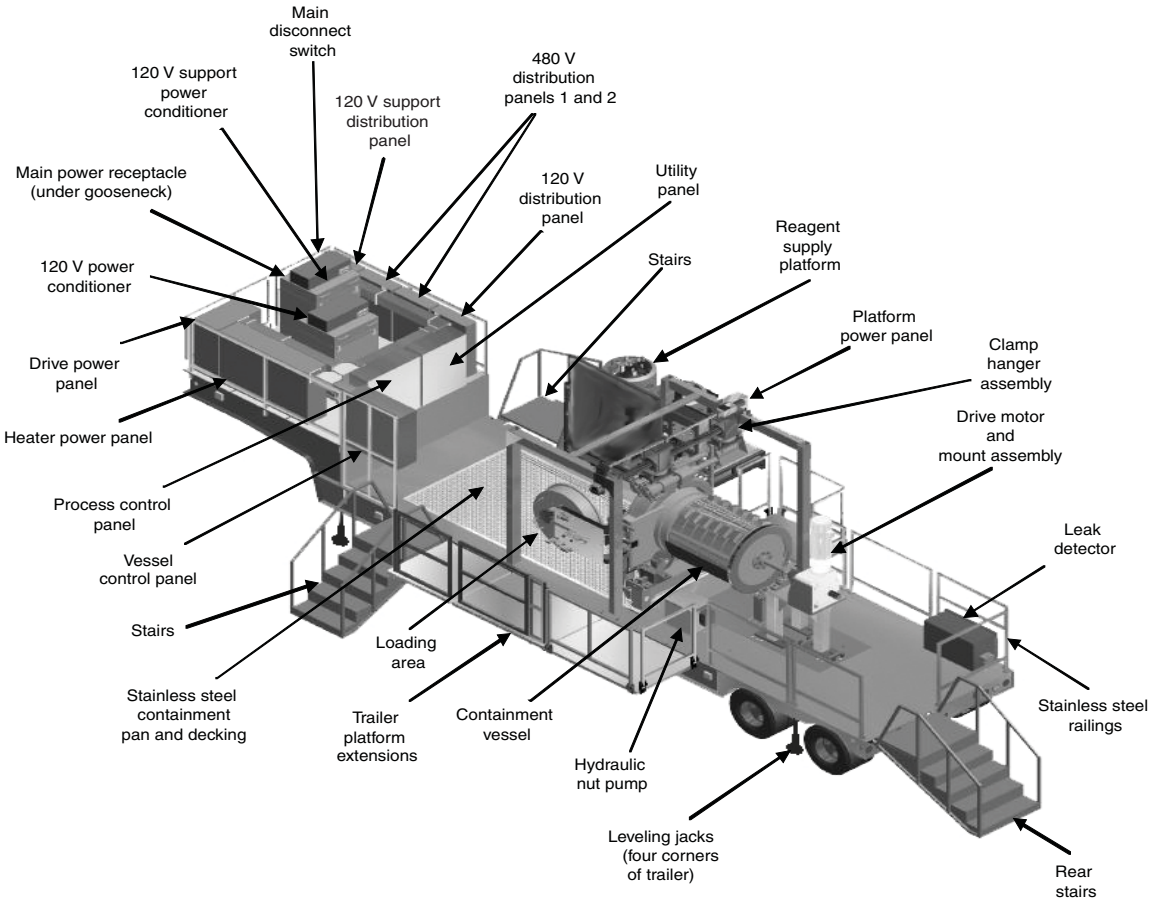

FIGURE 3-5 Drawing of the EDS-2 vessel on its trailer. SOURCE: Allan Caplan, System Development Group Leader, Non-Stockpile Chemical Materiel Project, CMA, "Explosive destruction system (EDS)—A mobile treatment system," presentation to the committee, May 7, 2008.

Copyright © National Academy of Sciences. All rights reserved.

Assessment of Explosive Destruction Technologies for Specific Munitions at the Blue Grass and Pueblo Chemical Agent Destruction Pilot Plants
http://www.nap.edu/catalog/12482.html

4
Rating of Explosive Destruction Technologies for Proposed BGCAPP and PCAPP Applications

INTRODUCTION

This chapter presents the committee's evaluation of the explosive destruction technologies (EDTs) under consideration. When evaluating a technology such as an EDT, various factors must be considered. One of the important factors is the economics of the technology. This includes the capital cost of the equipment, the operating costs, utility costs, waste disposal costs, and closure costs. These life-cycle costs have not been assessed by the committee in this study. An analysis of proprietary capital cost data was not part of the committee's task, nor did the committee have sufficient resources to predict the other components of the life-cycle costs. Therefore, the recommendations generated by the committee relate only to what might be termed "technical acceptability," in this case the eight evaluation factors discussed in Chapter 2. The four requirements for the EDTs that the committee was asked to consider are listed in Table 4-1. Some judgment has been used when one of the requirements in Table 4-1 appears to be more suited to a particular EDT owning, say, to the number of items to be processed or the time available for processing, among other considerations, but cost as such was not considered. Therefore, certain recommendations made by the committee might require modification when the life-cycle costs of the various EDTs are fully understood.

BASIS FOR ASSESSMENT

Eight factors were used to evaluate the suitability of a technology for a particular requirement. The factors used to assess the various EDTs were process maturity, process efficacy, process throughput, process safety, the public or the regulatory acceptability in a U.S. context, secondary waste issues, destruction verification capability, and process flexibility. These factors are discussed in detail in Chapter 2. The EDTs considered in this chapter are discussed in detail in Chapter 3, and the four EDTs that are candidates for destroying chemical weapons are described in Appendix A and Chapter 3. The methodology for assessing the technologies was as follows:

- For each of the four requirements—BG-1, BG-2, BG-3, and P-1 (see Table 4-1)—the committee members independently assessed each of three or four

Copyright © National Academy of Sciences. All rights reserved.

Assessment of Explosive Destruction Technologies for Specific Munitions at the Blue Grass and Pueblo Chemical Agent Destruction Pilot Plants
http://www.nap.edu/catalog/12482.html

EDT candidates with respect to the eight factors and assigned the technology a value between 1 and 10. A committee member's assessment was based on available information, committee discussions, and individual expertise.

- The independent ratings of the committee members were averaged to obtain a number from 0-10, reflecting the committee's collective judgment about each EDT with respect to the various factors—safety, throughput (to which Table 4-2 applies), efficacy, and so on.
- For example, an EDT assessed by the committee as excelling in a particular evaluation factor for a particular requirement was rated at 10. Indeed, it was possible for two or more technologies to receive a score of 10 if they were both (or all) outstanding. Ratings of less than 10 reflected shortcomings of varying degrees. If an EDT had serious problems but they could be corrected while retaining all the main features of the process, it might be assigned a rating of 4, the lowest rating given in the course of this exercise.
- For each technology, the ratings were summed, and the summed ratings (see Tables 4-3 through 4-6, which appear in association with the discussions for Requirements BG-1 through P-1, respectively) formed the basis for the committee's recommendations. If there were small differences between the selected EDT and one of the other EDTs, the committee noted this. Small differences in the summed ratings, up to about five points, were not considered to be significant by the committee. The evaluation factors were not weighted, but it would be possible for the Army to assign its own weighting factors and generate revised summed ratings.

The Army's Explosive Destruction System (EDS) would not be able to satisfy Requirements BG-1, BG-2 and BG-3, so it was not considered for those requirements. After discussions with Assembled Chemical Weapons Alternatives (ACWA),[1] it was decided to not evaluate the TC-60 transportable detonation chamber (TDC) for the destruction of noncontaminated rocket motors using either a static firing approach or a donor charge approach for Requirement BG-1. The TC-60 TDC is not designed for such an application; moreover, CH2M HILL offers the D-100 system, which is designed to destroy conventional weapons and, if testing is successful, should be capable of being used for static firing of the noncontaminated rocket motors. Also, as indicated in Chapter 3, a D-100 system is already installed at the Blue Grass Army Depot (BGAD).

Thus, the D-100 system was evaluated for Requirement BG-1, and the TC-60 TDC was evaluated for Requirement BG-2. For Requirement BG-3, the committee evaluated the combination of the two CH2M HILL technologies (the D-100 for the noncontaminated rocket motors and the TC-60 TDC for the mustard agent-filled projectiles). This was done with the concurrence of ACWA.[2] Further, this combination of systems from CH2M HILL was compared with only single systems from other vendors for Requirement BG-3. It is expected that ACWA will be able to consider the

[1]Personal communication between Joseph Novad, Deputy Program Manager, ACWA, and Margaret Novack, NRC, study director, September 23, 2008.

[2]Personal communication between Joseph Novad, Deputy Program Manager, ACWA, and Richard Ayen, committee chair, September 23, 2008.

Copyright © National Academy of Sciences. All rights reserved.

Assessment of Explosive Destruction Technologies for Specific Munitions at the Blue Grass and Pueblo Chemical Agent Destruction Pilot Plants
http://www.nap.edu/catalog/12482.html

committee's evaluations and recommendations for Requirements BG-1 (noncontaminated rocket motors only) and BG-2 (mustard agent projectiles only) and come to its own conclusions on the use of such combinations.

REQUIREMENT BG-1: DESTRUCTION OF APPROXIMATELY 70,000 NONCONTAMINATED M55 ROCKET MOTORS AT BLUE GRASS

Requirement BG-1 applies to the rocket motor component of M55 rockets but not to the warhead component. Therefore, Requirement BG-1 does not involve the processing of agent and can be considered to be a conventional munitions disposal application. The committee assumed that the rocket motor will be removed from its associated shipping and firing tube (SFT) segment and, owing to its polychlorinated biphenyl content, will be disposed of in a Toxic Substances Control Act (TSCA)-approved treatment facility. The M55 rocket motor contains 19.3 lb M28 double base (nitroglycerin and nitrocellulose) cast grain propellant.[3] The D-100 from CH2M HILL, the detonation of ammunition in a vacuum integrated chamber (DAVINCH) DV65 from Kobe Steel, Ltd., division, and the Dynasafe SDC2000 were evaluated for this requirement.

The M28 propellant in M55 rocket motors contains 2 percent lead stearate—a significant amount— and the detonator contains a smaller amount of lead azide (BPBGT, 2004). All of the technologies considered for this requirement face the issue of working with this quantity of lead and disposing of the lead-containing residues. For those technologies that require operators to insert materials into the detonation chamber through a large open door—all except the Dynasafe SDC2000—exposure to dust containing lead and other particulates is possible. Operators of these systems should wear respiratory protection when working near the open door.

Finding 4-1. When processing noncontaminated rocket motors, operators of the DAVINCH DV65 or the CH2M HILL D-100 could be exposed to substantial amounts of dust containing lead when working near the open door of the detonation chamber.

Recommendation 4-1. When processing rocket motors, operators of the DAVINCH DV65 or the CH2M HILL D-100 should be required by the Army to wear respiratory protection when working near the open door of the detonation chamber to minimize exposure to lead.

Process Maturity

D-100

As described in Chapter 3 and as discussed above, BGAD and CH2M HILL propose using a CH2M HILL D-100 system already installed at BGAD to destroy

[3]Information at www.fas.org/man/dod-101/sys/land/m55.htm

Copyright © National Academy of Sciences. All rights reserved.

Assessment of Explosive Destruction Technologies for Specific Munitions at the Blue Grass and Pueblo Chemical Agent Destruction Pilot Plants
http://www.nap.edu/catalog/12482.html

noncontaminated M55 rocket motors. Other D-100 systems and other CH2M HILL destruction chambers for conventional weapons from CH2M HILL's product line have been or are in routine operation at military bases and used for destruction of a wide variety of conventional munitions. A transportable T-10 model with a Department of Defense Explosive Safety Board (DDESB) approval for up to 4.3 lb total explosives was used at the Massachusetts Military Reservation to destroy over 25,000 munitions ranging from small arms to 105-mm projectiles (Quimby, 2007). This same system had been deployed at five sites as of May 2007. At Camp Navajo Army National Guard Base in Arizona, several types of white phosphorus munitions, including 162 81-mm mortars, were destroyed. The system was used at four sites in California to destroy 28,858 munitions in 15 days, although a more typical throughput is 25 munitions per day. The system was also employed at Redstone Arsenal, Alabama, for destruction of smoke-producing fills, riot agent fills, and incendiary fills. A D-200 was installed at the Crane Naval Surface Warfare Center in 2002. Of more direct relevance to this requirement, two D-100 systems, the same model proposed for use by BGAD in its static firing proposal, have been installed at the Milan Army Ammunition Plant in Tennessee.[4] CH2M HILL reported that the systems were inactive as of the writing of this report.[5] However, they had been used for 3 years to destroy munitions that included 25,000 155-mm M483 projectiles containing M42 or M46 submunition grenades (CH2MHILL, 2007).[6] The D-100 system at BGAD is available for this requirement and its DDESB approval for 49.3 lb TNT equivalent total explosives is adequate.[7]

However, as of the writing of this report, the Resource Conservation and Recovery Act (RCRA) permit for the D-100 at BGAD was in process. Also, the committee was not aware of any previous use of the D-100 or related systems for destruction of rocket motors.

DAVINCH

DAVINCH is a mature technology that should be able to destroy M55 rocket motors. The DV65 has an inside diameter of 2.6 m and a length of 6.9 m; the M55 rocket motor body is only about 1 m. The M55 rocket motor contains 8.8 kg of double base propellant. In testing the destruction of a simulated M55 rocket—i.e., both the rocket motor and a surrogate-filled warhead—another 22.2 kg of donor charge was used, for a total TNT-equivalent explosive loading of 31 kg, well within the 65-kg containment capability of the DV65. Thus, a scale-up of the DAVINCH would not be required for application to Requirement BG-1, although for increased throughput, a proposed, but not yet built, longer version of the DAVINCH, the DV120, might be used.

---

[4]Personal communication between Brint Bixler, Vice President, CH2M HILL, and Margaret Novack, NRC, study director, July 10, 2008.

[5]Personal communication between Brint Bixler, Vice President, CH2M HILL, and Richard Ayen, committee chair, August 29, 2008.

[6]Personal communication between Brint Bixler, Vice President, CH2M HILL, and Richard Ayen, committee chair, August 29, 2008.

[7]Personal communication between Brint Bixler, Vice President, CH2M HILL, and Richard Ayen, committee chair, July 23, 2008.

Copyright © National Academy of Sciences. All rights reserved.

Assessment of Explosive Destruction Technologies for Specific Munitions at the Blue Grass and Pueblo Chemical Agent Destruction Pilot Plants
http://www.nap.edu/catalog/12482.html

Although the DAVINCH technology has been permitted to operate in Japan and in Belgium and has destroyed over 2,500 items of recovered chemical weapons materiel as of late May 2008, it has not yet been permitted to operate in the United States. Also, as is the case with the other EDTs, the DAVINCH has not had an opportunity to demonstrate an ability to destroy M55 rocket motors.

SDC2000

Dynasafe proposes to use the model SDC2000 for destruction of the noncontaminated rocket motors. Dynasafe has extensive experience with this system in Germany and Taiwan.[8] See Chapter 3 for descriptions of the production experience in Germany and of the testing done to obtain destruction efficiencies (DEs)for mustard agent and to obtain information on the feeding and discharging of the rocket bodies. The feed system at Münster, Germany, was too small to accommodate the long rocket motors, but the vendor states that the feed system can be enlarged if a new system is built for the Blue Grass Chemical Agent Destruction Pilot Plant (BGCAPP).

The aluminum fires experienced in the simulated rocket motor testing at Münster were attributed to the use of too much aluminum. More extensive experience in Taiwan was cited as an indication that aluminum fires will not be an issue at BGCAPP. The only aluminum components of rocket motors are the fins; the bodies are steel. Also, the multiple vessel rotations used to remove scrap from the detonation chamber are considered by the manufacturer to be part of the normal operation of the system.

Requirement BG-1 Ratings for Process Maturity

For the process maturity criterion for Requirement BG-1, the committee assigned a rating of 8 to the DAVINCH DV65, a rating of 8 to the CH2M HILL D-100, and a rating of 6 to the Dynasafe SDC2000. The committee downgraded the Dynasafe SDC2000 by two points because of slight uncertainties over the new air pollution control system and the apparently solvable problems experienced during the simulated rocket motor testing.

Process Efficacy

D-100

The D-100 and related systems appear to be reliable and robust, as evidenced by their extensive use to date. The T-10 system has destroyed over 163,000 munitions since 2000; the more than 3-year campaign at Milan Army Ammunition Plant used two D-100s to destroy 25,000 155-mm projectiles containing submunition grenades (CH2M HILL,

[8]Personal communication between Harley Heaton, Vice President for Research, UXB International, Inc., and Margaret Novack, NRC, study director, July 17, 2008.

Copyright © National Academy of Sciences. All rights reserved.

Assessment of Explosive Destruction Technologies for Specific Munitions at the Blue Grass and Pueblo Chemical Agent Destruction Pilot Plants
http://www.nap.edu/catalog/12482.html

2007).[9] The static firing concept (see Chapter 3), which does not involve fragmentation of the munition, appears to offer an advantage over approaches where fragmentation occurs. Note, however, that the committee did not meet with or communicate with military personnel involved in operating these systems to obtain information on maintenance needs.

DAVINCH

In limited testing to date, the DAVINCH has demonstrated the ability to destroy a simulated M55 rocket contained in a wooden box. Additional testing carried out with a variety of linear-shaped charges has demonstrated the ability to access the agent, burster, and propellant through both an overpack and the fiberglass SFT.

If, as proposed by Kobe Steel, Ltd., a DV65 were used to destroy four rocket motors per shot, then 17,500 shots (detonation events) would be required. The loading would be fairly high: 35.2 kg energetics and 8.8 kg propellant per rocket. The associated donor charge would have to be sufficient to destroy the propellant but not so large as to exceed the 65 kg explosive containment capacity of the DV65. The DAVINCH may well be able to process this number of shots. The inner vessel is replaceable; it can be rotated to distribute wear around its surface and is reinforced with four layers of steel around its outer perimeter.

Although various versions of the DAVINCH have been used to destroy over 2,500 items of recovered chemical warfare materiel, the destruction of about 70,000 M55 rocket motors at BGAD would represent an increase of more than an order of magnitude in the number of items processed and the number of shots, especially since these would presumably be destroyed in a single DAVINCH vessel. Rocket motors would be destroyed in the same way as projectiles: by placing external donor charges on the rocket motors, hanging them in slings so they are suspended in the middle of the inner vessel, and detonating the donor charges. A static firing stand would not be used.[10]

SDC2000

The testing at Münster involved the feeding of 2.3 kg propellant, along with 2.3 kg aluminum and bottles of water, to the SDC2000 (UXB, 2007). The primary objective was to show that the water effectively controlled the temperature rise during the rocket firing, which it did. The vendor claims that the modifications that would be built into a new system for BGCAPP would accommodate the 1-m-long rocket motors and that the aluminum fires experienced at Münster would not occur during operations at BGCAPP because the ratio of aluminum to steel would be much lower than that at Münster. The M67 rocket motor contains only 0.28 kg aluminum, not 2.3 kg. Additional testing using a more appropriate amount of aluminum is needed. The net explosive weight (NEW) limit

[9]Personal communication between Brint Bixler, Vice President, CH2M HILL, and Richard Ayen, committee chair, August 29, 2008.

[10]Personal communication between Joseph Asahina, Chief of Technology, Kobe Steel, Ltd., Douglas Medville, committee member, and Richard Ayen, committee chair, September 27, 2008.

Copyright © National Academy of Sciences. All rights reserved.

Assessment of Explosive Destruction Technologies for Specific Munitions at the Blue Grass and Pueblo Chemical Agent Destruction Pilot Plants
http://www.nap.edu/catalog/12482.html

for the SDC2000 system at Münster was set by permit at 2.3 kg, about one-fourth the NEW of the rocket motor.

For a new system constructed for BGCAPP, Dynasafe claims the NEW limit can be up to 10 kg depending on the choice of the inner chamber option. This is just sufficient to withstand the unexpected detonation of a single rocket motor with its 19.3 lb (8.8 kg) of propellant. Finally, Dynasafe proposes to drop the rocket motors into the hot detonation chamber and to not employ static firing, as proposed by CH2M HILL. The committee expects that the motors will move around energetically inside the chamber when the heat of the chamber causes them to fire. The extent to which this could be an operational problem is not known, but the vendor's analysis indicates that the problem would not be serious (UXB, 2007). The system appears to be robust and reliable.

Requirement BG-1 Ratings for Process Efficacy

None of the EDTs being considered for Requirement BG-1 has demonstrated the destruction of whole M55 rocket motors, although some testing has been done using the DAVINCH and the SDC2000. The static firing concept proposed for the D-100 appears to be effective because the rockets are not allowed to move energetically around the chamber when they fire and are not subjected to fragmentation. The committee decided that reliability was the most important subfactor for this evaluation factor, and the rating would be based primarily on past performance on all munitions. All have favorable reliability records. Thus, for Requirement BG-1, the committee rated all three—the DAVINCH DV65, the Dynasafe SDC2000, and the CH2M HILL D-100—at 9.

Process Throughput

The throughput rates shown in Table 4-2 (and applicable for Requirements BG-1, BG-2, and BG-3) represent peak rather than average throughput rates. Actual processing rates will likely be slower during routine operations because of the downtime associated with both scheduled and unscheduled maintenance. This will reduce system availability and, accordingly, the average processing rate. The lower end of the projected campaign lengths in Table 4-2 assumes production is always at the peak rate. The upper end of the projected campaign length is twice the lower end and is an attempt to take into account downtime for any reason.

D-100

As indicated previously, the D-100 system for conventional weapons, with its 49.3 lb NEW limit, is expected to be able to accommodate up to six rocket motors per cycle, firing the motors sequentially in a firing stand. A throughput rate of 18 munitions per hour is anticipated. If the system operated for 10 hours per day, 18 motors per hour, 6 days per week, the 70,000 motors would be destroyed in about 1.25 years. The committee thus projected a campaign length of between 1.2 years and about 2.5 years.

Copyright © National Academy of Sciences. All rights reserved.

Assessment of Explosive Destruction Technologies for Specific Munitions at the Blue Grass and Pueblo Chemical Agent Destruction Pilot Plants
http://www.nap.edu/catalog/12482.html

DAVINCH

The DAVINCH manufacturer claims that the existing DV65 can process four M55 rocket motors per shot with a throughput rate of nine shots per 10-hour day—a cycle time of slightly over 1 hour. If 36 rocket motors are destroyed per 10-hour day, the 70,000 motors would be destroyed in 1,945 days, or 6.23 years, assuming 6-day operating weeks. The committee thus projected a campaign length from about 6.2 years to about 12.5 years. A proposed longer and higher explosive containment capacity version of the DAVINCH, the DV120, could also be used to destroy the rocket motors. This version would be used to destroy nine rocket motors per shot and would have a throughput of eight shots per day. If this version were to be used, the rocket motors would be destroyed in 972 days, or 162 6-day operating weeks (3.11 years). The committee thus projected a campaign length ranging from about 3.1 years to about 6.2 years. This could be acceptable if it is less than the expected duration of operations for BGCAPP.

Based on operating experience to date, the DAVINCH manufacturer states that about 30 minutes per day, an additional 3 hours per week, and still another 3 hours per month are required for routine maintenance activities. While these routine activities do not affect peak throughput, unscheduled corrective maintenance activities will probably take place over a 3- to 6-year operating period and could reduce this throughput.

SDC2000

The throughput rate expected by the vendor for the SDC2000 is high, 10 motors per hour, 10 hours per day, for a total of 100 motors per day (UXB, 2007).[11] This translates to about 700 operating days to destroy all the noncontaminated rocket motors. The committee thus projected a campaign that would take about 2.2 years to about 4.5 years.

Requirement BG-1 Ratings for Process Throughput

For the process throughput factor for Requirement BG-1, the committee assigned a rating of 10 to the CH2M HILL D-100, a rating of 5 to the DAVINCH DV65, and a rating of 8 to the Dynasafe SDC2000.

[11]Personal communication between Harley Heaton, Vice President for Research, UXB International, Inc., and Margaret Novack, NRC, study director, July 17, 2008.

Copyright © National Academy of Sciences. All rights reserved.

Process Safety

D-100

Use of the D-100 with static firing would not require donor explosives to be attached to the rocket motors. This would minimize the amount of explosives in the work area and the handling of those explosives.

The rocket motors must be handled manually, so exposure to lead is a possibility. The motors must be loaded into firing racks. Ignition wires must be connected to the igniters, and new igniters might need to be installed.

DAVINCH

Personnel protective equipment (PPE) should not be needed when handling noncontaminated rocket motors at Blue Grass, except when working within the chamber or near the open door, where exposure to lead could occur. The rocket motors and their donor charges can be inserted into the inner DAVINCH vessel by a robotic arm, with no worker exposure to energetics during that operation.

Since donor charges are needed to access the rocket motors, these explosives need to be stored in the vicinity of the DAVINCH. This could create an additional hazard.

SDC2000

Once the munitions are transported to the SDC2000, the processing is automatic and no donor explosives have to be attached. Overall, few manual operations are associated with the static detonation chamber (SDC) for Requirement BG-1.

Requirement BG-1 Ratings for Process Safety

For the process safety criterion for Requirement BG-1, the committee assigned a rating of 8 to the CH2M HILL D-100, a rating of 8 to the DAVINCH DV65, and a rating of 9 to the Dynasafe SDC2000.

Public and Regulatory Acceptability in a U.S. Context

D-100

RCRA permits have been issued for the two D-100 systems at Milan Army Ammunition Plant and for several other CH2M HILL detonation chambers for conventional weapon destruction. The RCRA permit for the D-100 at BGAD is in progress.

Copyright © National Academy of Sciences. All rights reserved.

Assessment of Explosive Destruction Technologies for Specific Munitions at the Blue Grass and Pueblo Chemical Agent Destruction Pilot Plants
http://www.nap.edu/catalog/12482.html

DAVINCH

Although the DAVINCH technology has not so far been permitted for destroying either energetics such as the M55 rocket motors or chemical agent in the United States, from a regulatory perspective, it should be able to meet environmental regulatory requirements and achieve permitted status for processing and destroying non-contaminated rocket motors at Blue Grass.

SDC2000

The Dynasafe SDC2000 has not been issued regulatory permits in the United States but has operated in Germany, where emissions testing based on U.S. regulatory requirements has been performed. The committee anticipates that U.S. regulatory bodies would grant environmental permits based on satisfactory testing prior to full-scale operations. The manufacturer indicates it would change the design of the pollution abatement system for use in the United States, converting the secondary combustion chamber to an electrically heated oxidizer.

Requirement BG-1 Ratings for Public and Regulatory Acceptability in a U.S. Context

The CH2M HILL D-100 and smaller and larger models of the same technology have been permitted and operated in a production mode at several locations in the United States. It should be the easiest to permit and to be highly acceptable to the public. It is rated a 10. Neither the DAVINCH nor the Dynasafe SDC2000 have been permitted or operated in the United States. Both are rated a 7.

Secondary Waste Issues

D-100

Secondary waste will consist of spent rocket motor bodies and dust resulting from pulsed jet cleaning of the particulate filter. The dust from the filter will contain lead from the lead stearate in the propellant. It could possibly be defined as a RCRA hazardous waste, but the motor bodies are not expected to be so defined. Contamination of the rocket bodies with agent is not an issue since the rocket bodies have never been exposed to agent. This is true for any EDT used for Requirement BG-1.

DAVINCH

The volume of solid and liquid wastes other than metal rocket motor casing and fin fragments is expected to be low: about 0.9 kg of filter dust and 0.2 m^3 of condensate

Copyright © National Academy of Sciences. All rights reserved.

Assessment of Explosive Destruction Technologies for Specific Munitions at the Blue Grass and Pueblo Chemical Agent Destruction Pilot Plants
http://www.nap.edu/catalog/12482.html

water and cooler blowdown per shot. Again, the dust from the filter will contain lead and could be defined as a RCRA hazardous waste. Although agent contamination is not an issue, the offgases will require treatment. Their volume and constituents will depend on the materials that are detonated and combusted in the DAVINCH vessel—that is, rocket propellant and, possibly, overpacking materials.

SDC2000

The SDC2000 generates up to 150 Nm^3/hr of nitrogen, water vapor, and carbon dioxide offgas. If used in the United States, the manufacturer states that the acidic and basic scrubbers would produce no liquid effluents but would produce up to 500 lb/day of salts as a filter cake**.** Since the rocket motors contain 2 percent lead stearate, the salts resulting from their processing could be defined as hazardous waste owing to the lead content. The scrap metal can be released for unrestricted use.

Requirement BG-1 Ratings for Secondary Waste Issues

Neither the D-100 nor the DAVINCH DV65 will produce waste streams much larger than the minimum possible. Both were rated at 9. Because of the production of salts from the scrubber, the SDC 2000, is rated lower, at 7.

Destruction Verification Capability

Destruction of M55 rocket motors per Requirement BG-1 does not involve chemical agent, so compliance with the provisions of the Chemical Weapons Convention (CWC) treaty should not be an issue for any EDT used for this purpose. Therefore, a rating N/A (not applicable) applies.

Process Flexibility

Process flexibility was considered to be not applicable to Requirement BG-1, which involves a single feedstock, noncontaminated rocket motors.

Summary Assessment for Requirement BG-1

D-100

The D-100 has many advantages. It is designed for the destruction of conventional weapons, and Requirement BG-1 is just such an operation. The pollution control system of the D-100 is more appropriate for conventional munitions than those of the other technologies. The waste streams are minimal. The projected length of the

Copyright © National Academy of Sciences. All rights reserved.

campaign would average 1.2 to about 2.5 years, the shortest of all the EDTs considered. A program to demonstrate that the D-100 will work as expected has been proposed, but no testing has been done. Tests with actual rocket motors would be needed before this technology could be selected for Requirement BG-1.

DAVINCH

The DAVINCH technology could be used to destroy noncontaminated motors from the M55 rockets at BGAD. However, the large number of rocket motors would take between 6.2 and 12.5 years, assuming that the throughput rates estimated by the technology provider can be maintained. Although no significant technical issues have been identified that would lead the committee to question the ability of the DAVINCH to destroy propellant, both DAVINCH and its offgas treatment system would need to be demonstrated before the applicable regulatory permits could be issued. Based on prior experience, the manufacturer estimates that it will take 18-24 months for fabrication and installation of a DAVINCH unit at Blue Grass, with additional time required for the above-mentioned testing. Limited testing demonstrated that a DAVINCH system is capable of destroying a simulated rocket motor, but tests with actual rockets would be needed before this technology could be selected for Requirement. BG-1.

SDC2000

Information is needed on many aspects of the SDC2000, including the nature of the flameless oxidizer and the ability of Dynasafe to obtain DDESB approval to feed whole rocket motors. The system has not been permitted in the United States. On the plus side, the throughput rate is very acceptable, and the process has many inherently safe features. Additional testing would be needed before this technology could be selected for Requirement BG-1.

Overall Ratings for Requirement BG-1

Table 4-3 summarizes the ratings for three EDT technologies for requirement BG-1. The D-100 static firing system would be the most satisfactory EDT to meet Requirement BG-1. The fact that three such systems have been installed and two have been permitted and operated in the United States is a major plus. One of the three units is already installed at BGAD and is available for this requirement. Larger and smaller systems from the same CH2M HILL product line have been built and operated. The summed rating for the D-100 unit is 54 out of a possible 60. The Dynasafe feed chambers and the discharge chute would have to be resized. The DAVINCH DV65 and the Dynasafe SDC2000 are both rated 46. Neither has been permitted or operated in the United States, and their throughput rate is lower than that of the D-100.

Copyright © National Academy of Sciences. All rights reserved.

Assessment of Explosive Destruction Technologies for Specific Munitions at the Blue Grass and Pueblo Chemical Agent Destruction Pilot Plants
http://www.nap.edu/catalog/12482.html

Finding 4-2. The CH2M HILL D-100 detonation chamber for conventional munitions, using static firing of the rocket motors, is best suited for Requirement BG-1. The DAVINCH DV65 and the Dynasafe SDC2000 are acceptable second choices.

Recommendation 4-2. For Requirement BG-1, if testing is successful, the Army should use the CH2M HILL D-100 detonation chamber at BGAD, with static firing of the rocket motors. The Army should consider the Dynasafe SDC2000 and the DAVINCH DV65 as acceptable second choices.

REQUIREMENT BG-2: DESTRUCTION OF APPROXIMATELY 15,000 MUSTARD AGENT H-FILLED 155-MM PROJECTILES AT BLUE GRASS

Implementation of Requirement BG-2 would allow an EDT to process all the mustard agent H munitions, including leakers, stored at BGAD in parallel with the disposal processing of nerve agent VX and GB projectiles through BGCAPP. The Program Manager for Assembled Chemical Weapons Alternatives (PMACWA) staff indicated that this would shorten the overall schedule for the destruction of the BGAD stockpile by 8 months. Although the U.S. Army's EDS technology has proven its ability to process the type of munitions that are associated with Requirement BG-2, its low processing rate (one 155-mm projectile in 2 days) would necessitate a very long campaign: about 100 to 200 years for a single EDS. The EDS was therefore eliminated from further consideration for Requirement BG-2 (and also for Requirement BG-3). Because the CH2M HILL D-100 is designed for destruction of conventional weapons only, it, too, was eliminated.

Process Maturity

TC-60 TDC

Several versions of the TDC have been used extensively for the destruction of chemical weapons. A TC-10 system and a TC-60 system were used at Poelkapelle in Belgium to destroy 3,200 recovered chemical munitions. A TC-25 system was tested at Porton Down in the United Kingdom in 2003. A TC-60 was extensively tested at Porton Down from 2004 to 2006. As described in Chapter 3, this same system was permitted and operated at Schofield Barracks in Hawaii to destroy 71 munitions containing phosgene and chloropicrin. CH2M HILL claims that the Army owns this TC-60 system, and it might be made available for Requirement BG-2.[12] Of special interest is the upgrading of the system at Porton Down between 2004 and 2006 and the well-documented subsequent destruction of mustard agent-filled 25-pounder projectiles (see Chapter 3).

[12]Personal communication between Brint Bixler, Vice President, CH2M HILL, and Jim Pastorick, committee member, September 3, 2008.

Copyright © National Academy of Sciences. All rights reserved.

Assessment of Explosive Destruction Technologies for Specific Munitions at the Blue Grass and Pueblo Chemical Agent Destruction Pilot Plants
http://www.nap.edu/catalog/12482.html

However, the design and operating issues encountered during the recent Schofield Barracks operations point to the need for the Army to continue to correct design deficiencies, especially considering the large number (15,000) of munitions involved in Requirement BG-2. As noted in Chapter 3, these deficiencies were being corrected as this report was being written. Also, the TC-60 TDC has little experience with destruction of 155-mm projectiles. In the 2008 campaign at Schofield Barracks, 38 phosgene-filled 155-mm projectiles were destroyed. No mustard agent-filled 155-mm projectiles have been destroyed.

DAVINCH

DAVINCH is a mature technology for chemical agent destruction. It had destroyed over 2,500 recovered chemical warfare materiel items (as of late May 2008) in Japan and Belgium, including lewisite, mustard agent, and agents Clark I and II in bombs and a variety of projectiles. Although the DAVINCH has not been used to destroy mustard agent-filled M104 and M110 155-mm projectiles, it should be able to do so. In Japan, it destroyed over 1,600 Yellow bombs containing a 50/50 mix of mustard agent and lewisite. The mustard agent fill in those bombs was 9.45 kg as compared to 5.31 kg mustard agent in the 155-mm projectile. Their explosive weight was 2.3 kg as compared to 0.186 kg in the 155-mm projectile. In Poelkapelle, Belgium, the DAVINCH destroyed 150-mm Clark agent-filled munitions that were comparable in size to the 155-mm projectiles at BGAD (50 cm length vs. 68 cm length for the 155-mm projectiles). The Belgian artillery rounds have a NEW of 2.5 to 2.75 kg, while the 155-mm projectiles have a NEW of 0.186 kg. Thus, the DAVINCH has demonstrated the ability to destroy munitions having a greater NEW and containing more agent than the 155-mm projectile.

Scale-up is not required since the DAVINCH DV65 has an inside diameter of 2.6 m and a length of 6.9 m, more than sufficient to destroy the 155-mm diameter, 68-cm-long projectiles at BGAD.

DAVINCH has not been permitted in the United States. Before it can obtain a RCRA operating permit, the equivalent of trial burns with agent or agent surrogate will have to be conducted to demonstrate the ability of the system to achieve the required degree of agent destruction.

SDC2000

The Dynasafe SDC is a mature technology for destruction of the type of chemical weapon in Requirement BG-2. As reported in Chapter 3, more than 13,000 recovered munitions were destroyed at the Münster, Germany, facility. Also described in Chapter 3 is the 3-day test series carried out at Münster to demonstrate that the Dynasafe SDC2000 system could effectively destroy mustard agent-filled munitions. Three extensively monitored runs were conducted using distilled (sulfur) mustard agent HD-filled 100-mm mortar rounds. For each run, either two or three mortars at a time were fed as a single batch to the SDC approximately three times per hour. HD sampling was conducted at three sampling points in the pollution abatement system. The results of the three-day HD tests showed that an overall process DE of >99.999999989 percent (nine nines) was

Copyright © National Academy of Sciences. All rights reserved.

Assessment of Explosive Destruction Technologies for Specific Munitions at the Blue Grass and Pueblo Chemical Agent Destruction Pilot Plants
http://www.nap.edu/catalog/12482.html

achieved. The technology has not been demonstrated in the United States. Also, Dynasafe has indicated it would not use the same version of the air pollution control system used at Münster in the United States. As noted in Chapter 3, Dynasafe has provided some information on its planned new system, but the system has not been designed, built, or tested.

Requirement BG-2 Ratings for Process Maturity

For the process maturity evaluation factor for Requirement BG-2, the committee assigned a rating of 8 to both the TC-60 TDC and the DAVINCH DV65 and gave a rating of 7 to the Dynasafe SDC2000.

Process Efficacy

TC-60 TDC

Reliability is a concern for the TC-60. As described in Chapter 3, operational problems were observed during the Schofield Barracks operations. Problems were encountered with the detonator initiation system. The lime feed system appeared to not be operating properly and was subsequently found to be feeding lime too slowly. At the end of the campaign, approximately 50 gallons of aqueous fluid with a pH of 1 was unexpectedly found in the expansion tank.[13] As noted in Chapter 3, these problems were being corrected as this report was being written. A heat exchanger failed, indicating improper selection of materials of construction or a failure to prevent acid gases from migrating past the lime feed system to the heat exchanger. This same heat exchanger had also failed during testing at Porton Down. It was redesigned using new materials of construction and rebuilt to allow completion of the Schofield Barracks operation.[14] Robustness is also a concern. It is not clear that the TC-60 could process 15,000 mustard agent projectiles without very high levels of maintenance.

However, the TC-60's approach to munitions destruction is fundamentally sound and, as already noted, the operating problems were being corrected and the heat exchanger that failed has been replaced with a unit with improved materials of construction. Use of the TC-60 is continuing, and it can be expected that more improvements will be made. The current schedule for BGCAPP provides about 5 years to make these improvements. As shown by the testing of the TC-60 on mustard agent-filled 25-pounder projectiles at Porton Down, the DEs are high enough (see Chapter 3). Mustard agent concentrations during the testing were below the limit of detection at the entrance to the final filtration/activated carbon adsorption operation.

---

[13]Communication via teleconference between Dave Hoffman, Chemical Materials Agency (CMA), and the committee, August 18, 2008.

[14]Personal communication between Brint Bixler, Vice President, CH2M HILL, and Richard Ayen, committee chair, August 15, 2008.

Copyright © National Academy of Sciences. All rights reserved.

Assessment of Explosive Destruction Technologies for Specific Munitions at the Blue Grass and Pueblo Chemical Agent Destruction Pilot Plants
http://www.nap.edu/catalog/12482.html

DAVINCH

The DAVINCH has proved to be robust and reliable, having destroyed over 2,500 items of recovered chemical warfare materiel through late July 2008. The items contained a variety of fills, including mustard agent, lewisite, and Clark agents.

If used to destroy mustard agent-filled 155-mm projectiles at Blue Grass, the explosive loading would be well within the capability of the DAVINCH units—that is, even if a 20- to 30-kg donor charge is used, the combined explosive weight of the projectile burster (0.186 kg) and the donor charge would still be less than the explosive containment capabilities of the DV65.

The DE appears to be more than adequate, based on results to date. The DE for agent in the DAVINCH vessel for a 50:50 mix of mustard agent and lewisite has been 99.9999 percent. In a separate test an additional agent DE of >99.99 percent (below agent detection limits) was achieved in the cold plasma oxidizer that treats the offgas. In theory, the two DEs could be multiplied together to obtain an overall DE. However, analytical limits of detection would prevent confirmation of that result.

If the DV65 is used, 7,500 shots would be required to process the 15,000 155-mm mustard agent H projectiles at BGAD, and this large number of shots could adversely impact the inner vessel. This number of shots is well in excess of the cumulative number of shots conducted in all DAVINCH vessels to date. The larger proposed DV120 would absorb the impact of 3,750 shots. These quantities should be acceptable since as noted above, the inner vessel is replaceable and can be rotated to distribute wear around its surface. Furthermore, it can be strengthened by several layers of steel plates on its outer surface, as has been done with the DV50 in use in Belgium. The system is not transportable.

SDC2000

The Dynasafe SDC2000 has also demonstrated the ability to process the types of munitions associated with Requirement BG-2. DEs are high enough, although they have not been demonstrated with the proposed new air pollution control system. Reliability has been good during the operations in Germany. The system is not transportable.

Requirement BG-2 Ratings for Process Efficacy

For the process efficacy evaluation factor for Requirement BG-2, the committee gave the TC-60 TDC a rating of 4 and the DAVINCH DV65 and the Dynasafe SDC2000 ratings of 9.

Copyright © National Academy of Sciences. All rights reserved.

Assessment of Explosive Destruction Technologies for Specific Munitions at the Blue Grass and Pueblo Chemical Agent Destruction Pilot Plants
http://www.nap.edu/catalog/12482.html

Process Throughput[15]

TC-60 TDC

TC-60 TDC operations at Porton Down showed that one detonation every 35 minutes is possible. A 35-minute cycle would correspond to 17 detonations per 10-hour shift. At this rate, 882 days of operation (2.83 years) would be required to destroy the 15,000 projectiles. The committee thus projected a campaign length ranging from about 2.8 years to about 5.7 years.

DAVINCH

The DAVINCH DV65 is capable of destroying two 155-mm projectiles per shot for nine shots per 10-hr day. At this throughput of 18 projectiles per day, it would take 834 days, or 139 six-day weeks (2.7 years), to destroy the 15,000 mustard agent H projectiles at BGAD. The committee thus projected a campaign length ranging from about 2.7 years to about 5.3 years for the DV-65. The DAVINCH manufacturer estimates that the larger proposed DV120 will be able to destroy four 155-mm projectiles per shot, again doing this nine times per 10-hour day. If this estimate is correct, the processing time would be 417 days, or 1.34 years. The committee thus projected a campaign length ranging from about 1.3 years to about 2.7 years for the DV-120.

SDC2000

The Dynasafe SDC2000 can destroy one 155-mm projectile per cycle and can conduct three cycles per hour.[16] This corresponds to 30 projectiles per 10-hour day. Operation in this mode would result in the destruction of the 15,000 mustard agent H projectiles at BGAD in 500 operating days (1.6 years). The committee thus projected a campaign length ranging from about 1.6 years to about 3.2 years.

Requirement BG-2 Ratings for Process Throughput

For the process throughput criterion for Requirement BG-2, the committee assigned ratings of 8 to the TC-60 TDC and the DAVINCH DV65. The Dynasafe SDC2000 was rated at 10.

---

[15] The reader is reminded that footnote *b* in Table 4-2 explains the use of ranges for projected throughputs.

[16] Personal communication between Harley Heaton, Vice President for Research, UXB International, Inc., and Margaret Novack, NRC, study director, July 17, 2008.

Copyright © National Academy of Sciences. All rights reserved.

Assessment of Explosive Destruction Technologies for Specific Munitions at the Blue Grass and Pueblo Chemical Agent Destruction Pilot Plants
http://www.nap.edu/catalog/12482.html

Process Safety

TC-60 TDC

The TDC has been operated extensively in both production and testing modes, and the committee is not aware of incidents causing injuries. ECBC reported that TC-60 operations were conducted safely during their 2004-2006 testing at Porton Down (DiBerardo et al., 2007).

The TDC requires individual handling of the agent-containing munitions, manual attachment of the explosives to the munitions, and manual hanging of the munitions in the detonation chamber. In the event of a misfire, there would be additional risk for the operations personnel because they would have to open the chamber containing the munitions and their donor explosives to correct the cause of the misfire. Also, this technology requires the storage of explosives in the vicinity of the unit, which creates an additional hazard.

DAVINCH

The DAVINCH vessels, consisting of inner and outer steel chambers, have been safely operated over a 6-year period, first in Japan and later in Belgium. Some of the munitions destroyed are heavier than those found in the 155-mm projectiles at BGAD and contain more agent and explosives. To date, there have been no incidents that the committee is aware of that have compromised either worker or public safety and there have been no releases of agent or offgas containing residual quantities of agent.

DAVINCH operations involve munition handling, the manual placement of donor explosives around the munition, and the placement of a detonator into the donor explosive. When handling the mustard agent-filled 155-mm projectiles at BGAD, PPE may be required, although if the projectiles are inserted into the DAVINCH vessel using a robotic arm, as is done in Japan, that operation should not expose workers to explosives or agent.

Since donor charges are used to destroy the munition, they need to be stored in the vicinity of the DAVINCH. This could create an additional hazard.

SDC2000

The Process Safety section for the SDC2000 for Requirement BG-1 applies.

Requirement BG-2 Ratings for Process Safety

For the process safety factor for Requirement BG-2, the committee assigned a rating of 7 to the TC-60 TDC, a rating of 8 to the DAVINCH DV65, and a rating of 9 to the Dynasafe SDC2000.

Copyright © National Academy of Sciences. All rights reserved.

Assessment of Explosive Destruction Technologies for Specific Munitions at the Blue Grass and Pueblo Chemical Agent Destruction Pilot Plants
http://www.nap.edu/catalog/12482.html

Public and Regulatory Acceptability in a U.S. Context

TDC

The TC-60 TDC has been permitted and operated in the United States but only for the destruction of phosgene and chloropicrin. For this reason, although eventually a full RCRA operating permit would be required, operations could be initiated under a research, development, and demonstration (RD&D) permit. To allow continued operation of the TC-60 TDC, BGCAPP's Title V CAA permit would need to be modified. When obtaining the permits for operation of the TC-60 TDC in Hawaii, there was no public opposition. As previously discussed and as indicated in Appendix A, permits have been obtained for similar systems built for destruction of conventional weapons in the United States. The TC-60 TDC uses a catalytic oxidizer but no open flame in the pollution abatement system. The catalytic oxidizer does not appear to be a liability for the public or the regulatory authorities. Noise levels are not extreme. The system is transportable, a positive factor.

DAVINCH

Although the DAVINCH technology has not been permitted for destroying either energetics or chemical agent in the United States, from a regulatory perspective, it should be able to satisfy environmental regulations and obtain permitted status for processing and destroying mustard agent-filled 155-mm projectiles at BGAD.

The use of DAVINCH for destroying the 155-mm projectiles will require a RCRA operating permit. Since it has not yet been used to destroy either energetics or chemical weapons in the United States, it should be an ideal candidate for beginning operations under a RCRA RD&D permit.

Public perceptions of DAVINCH may be favorable in light of the high degree of agent destruction (99.9999 percent for the vessel itself and an additional >99.99 percent destruction of any agent remaining in the offgas in the cold plasma oxidizer) and also because all process residuals can be held, tested, and recycled through the DAVINCH vessel and cold plasma oxidizer for further treatment (if needed) prior to release.

Since there are no DAVINCH units operating in the United States on which to base a perception, the public reaction to using DAVINCH for destroying the 155-mm mustard agent-filled projectiles might be favorable. It could also, however, be ambivalent if it is perceived that what happens in the cold plasma oxidizer is a form of incineration.

SDC2000

The Dynasafe SDC2000 has not been permitted in the United States. It has operated in Germany, and emissions testing based on U.S. regulations has been performed. The committee anticipates that regulatory bodies would grant a permit based on satisfactory testing prior to full-scale operations. The vendor indicates it would be prepared to change the design of the pollution abatement system for use in the United

Copyright © National Academy of Sciences. All rights reserved.

Assessment of Explosive Destruction Technologies for Specific Munitions at the Blue Grass and Pueblo Chemical Agent Destruction Pilot Plants
http://www.nap.edu/catalog/12482.html

States, converting the secondary combustion chamber to a flameless oxidizer and making other changes (see Chapter 3). The committee cannot anticipate either a favorable or an adverse public reaction to this system since it has not yet been designed, built, or tested.

Requirement BG-2 Ratings for Public and Regulatory Acceptability in a U.S. Context

The TC-60 TDC has been permitted and operated in the United States, and no public or regulatory opposition was encountered in the process. However, it does not have the hold-test-release feature of the DAVINCH. The TDC is rated a 9.

The DAVINCH has not been permitted but has a hold-test-retreatment capability, which is a positive. It is rated a 7.

The Dynasafe SDC has not received an operating permit in the United States, and the design of its pollution abatement system will be different from that of the system used at Münster; it has not, however, been specified in full or built and tested. The Dynasafe SDC was assigned a rating of 7.

Secondary Waste Issues

TDC

The TC-60 TDC produces relatively small amounts of secondary waste. These are described in Chapter 3. It is likely that the spent lime and spent pea gravel will not be a RCRA hazardous waste for mercury since the Levinstein mustard agent in the projectiles at BGAD contains low levels of mercury. Overall, the secondary waste, including the spent activated carbon, is not expected to contain compounds of regulatory concern. The scrap metal is thermally decontaminated to a ≤1 vapor screening level (VSL) prior to removal from the detonation chamber. As explained in Appendix A, this thermal decontamination is accomplished by purging the detonation chamber with hot air.

DAVINCH

When processing 155-mm mustard agent H projectiles, several waste streams will be produced. These include fragments of metal from the munition bodies, burster wells, and other metal parts; dust; small quantities of liquids from spray decontamination of the DAVINCH vessel; condensate water from the cold plasma oxidizer; activated carbon from the filters; and the treated offgases from the process. The metal parts will have been explosively treated in the vessel to a point where they can be released or recycled. This treatment includes exposure of the metal munition fragments to detonations of conventional explosives (see Appendix A). Following treatment in the cold plasma oxidizer, the process offgas enters a retention tank for testing. If the quantity of agent in the offgas exceeds the VSL, it is recycled through the DAVINCH vessel and the cold plasma oxidizer for further treatment.

The volumes of each waste stream resulting from the processing of 155-mm projectiles are not known, but absent a large volume of liquid wastes, they are expected

Copyright © National Academy of Sciences. All rights reserved.

Assessment of Explosive Destruction Technologies for Specific Munitions at the Blue Grass and Pueblo Chemical Agent Destruction Pilot Plants
http://www.nap.edu/catalog/12482.html

to be small. (Note: The total weight of all substances recovered from destruction of a similar munition, the 150-mm Clark projectile in Belgium, is 42 kg per one munition shot). The original total munition weight was 40 kg. The TC-60 TDC would be expected to produce about the same relative amount of recovered substances. The Dynasafe SDC2000, with the proposed new air pollution control system, would produce more recovered substances because of filter cake production. The EDS would also produce more recovered substances because of hydrolysate production.

SDC2000

Offgases from the SDC2000 are up to 150 Nm^3/hr of nitrogen, water vapor, and carbon dioxide. The acidic and basic scrubbers would produce no liquid effluents but would produce up to 500 lb per day of salts as a filter cake, which would need to be tested for contaminants of regulatory concern. The scrap metal resulting from the munition bodies is suitable for unrestricted release; however, this waste is a listed waste in Kentucky and can therefore be sent only to a hazardous waste treatment, storage, and disposal facility (TSDF) or to a recycler that is allowed to receive this waste, such as the Rock Island smelter.

Requirement BG-2 Ratings for Secondary Waste Issues

The DAVINCH produces a relatively small amount of secondary waste and is designed as a hold-test-release system, which ensures that offgases are free of agent or other compounds of regulatory concern. It is rated a 9. The TC-60 TDC generates a small volume of waste that is not, however, expected to contain contaminants of regulatory concern. The discharged scrap metal is ≤1 VSL. It does not have a gaseous emission hold-test-release feature. The TC-60 TDC is rated an 8. The amount of secondary waste produced by the proposed SDC2000 system for BGCAPP is not well known because of the proposed changes to the air pollution control system, but it promises to be modest. However, it will not be as low as the secondary waste from the TC-60 TDC or the DAVINCH. The discharged scrap metal is acceptable for unrestricted use. The Dynasafe SDC2000 was rated a 7.

Destruction Verification Capability

TC-60 TDC

As reported in Chapter 3, well-monitored testing was carried out at Porton Down during March 2006. During this testing, 101 mustard agent-containing 25-pounder projectiles were destroyed. No agent was detected in the offgas from the pollution abatement system, and the overall DE was determined to be >99.9999 percent.[17] Because

[17]Brint Bixler, Vice President, CH2M HILL, "Destruction of chemical weapons using CH2M Hill's transportable detonation chamber," presentation to the committee, May 8, 2008.

Copyright © National Academy of Sciences. All rights reserved.

Assessment of Explosive Destruction Technologies for Specific Munitions at the Blue Grass and Pueblo Chemical Agent Destruction Pilot Plants
http://www.nap.edu/catalog/12482.html

the munition bodies are shattered into small pieces by the detonation, they cannot be re-used.

The TC-60 TDC presently does not have the ability to hold and test the gases it generates before they are released to the atmosphere.

DAVINCH

The DAVINCH technology would destroy the 155-mm projectile bodies by fragmenting them through use of donor explosives. As a result, the munition bodies could not be refilled. Destruction of the mustard agent fill in these projectiles would take place in the DAVINCH vessel, where in tests to date, a 99.9999 percent destruction and removal efficiency (DRE) has been demonstrated. Additional agent destruction in the vessel offgases takes place in the cold plasma oxidizer, where a DE of >99.99 percent of any remaining mustard agent has also been demonstrated. The process provides for the retention and testing of postoxidizer offgases and, if need be, recycling them through the system for any additional agent destruction needed before release.

SDC2000

The Dynasafe SDC2000 at Münster is not designed for nor does it operate in a hold-test-release mode. As indicated in the Dynasafe description in Appendix A and as more recently confirmed by the vendor, such a system has been designed but has not been built or tested. [18] Operation in the hold-test-release mode reduces the throughput rate by an unspecified amount. The throughput rates presented in this report do not apply to operation in the hold-test-release mode.

As reported in Chapter 3, testing was carried out on the Dynasafe SDC2000 system at Münster, Germany, to determine the DE for mustard agent HD. Three HD destruction tests were conducted using 100-mm mortar rounds. The results of the 3-day HD tests showed the absence of any detectable agent near the end of the process and an overall DE for the system of >99.999999989 percent (nine nines). DEs for the detonation chamber only were measured at 99.99481 percent and 99.99508 percent.

Requirement BG-2 Ratings for Destruction Verification Capability

For evaluating the verifiability of the destruction for Requirement BG-2, the committee assigned a rating of 9 to the TC-60 TDC, a rating of 10 to the DAVINCH DV65, and a rating of 9 to the Dynasafe SDC2000.

[18]Personal communication between Harley Heaton, Vice President for Research, UXB International, Inc., and Margaret Novack, NRC, study director, July 17, 2008.

Copyright © National Academy of Sciences. All rights reserved.

Process Flexibility

Process flexibility was considered to be not applicable to Requirement BG-2, which involves a single feedstock, 155-mm mustard agent-filled projectiles.

Summary Assessment for Requirement BG-2

TC-60 TDC

The TC-60 TDC could execute Requirement BG-2 in a reasonable time as a consequence of its higher throughput. The high probability of being able to obtain an operating permit is also an advantage. Its current lack of an ability to hold-test-release is a disadvantage, as is the need to store explosives near the unit during operations. The need for additional upgrading of the unit operations downstream of the detonation chamber to improve robustness and reliability had a slight adverse impact on its rating for maturity.

DAVINCH

The DAVINCH technology is capable of destroying the approximately 15,000 mustard agent-filled 155-mm projectiles at BGAD. It has destroyed more than 2,500 comparable bombs and projectiles, some containing mustard agent, in previous and ongoing applications overseas. The large number of projectiles, combined with the relatively low processing rate of the DAVINCH technology (estimated destruction rate of 18 per day in an existing unit and 36 per day in a proposed longer version) imply a campaign length range of about 2.7 to about 5.3 years for the DV65 and about 1.3 to about 2.7 years for the proposed DV120, assuming that the throughput rates claimed by the technology developer can be maintained over these time periods. The large number of detonations involved could adversely affect the DAVINCH inner vessel, although as noted above for Requirement BG-1, this is mitigated by (1) four layers of steel placed around the outer perimeter of the inner vessel and (2) periodic rotation of the inner vessel to distribute the impacts of high-velocity metal parts on the vessel walls. If need be, the inner vessel can be replaced per the DAVINCH design.

The DAVINCH technology has not been permitted in the United States, hence RCRA and other permits and appropriate performance testing will have to be obtained for any application. In the United States public awareness of the DAVINCH is low and reactions to its characteristics—thermal treatment in both the vessel and in the plasma oxidizer—are unknown.

SDC2000

The Dynasafe SDC2000 also could execute Requirement BG-2 in a reasonable time based on its throughput. In addition, it has a proven record of destroying a similar number of munitions in Germany without any reported problems. It has a distinct safety

Copyright © National Academy of Sciences. All rights reserved.

Assessment of Explosive Destruction Technologies for Specific Munitions at the Blue Grass and Pueblo Chemical Agent Destruction Pilot Plants
http://www.nap.edu/catalog/12482.html

advantage for Requirement BG-2 as it minimizes handling by the operating staff and does not necessitate storing additional explosives in proximity to the unit during operations. It has not been permitted in the United States, and this introduces uncertainty. The vendor has indicated that a new pollution control system would be used. This system has been outlined but not described in detail. It has not yet been designed, built, or tested.

Overall Ratings for Requirement BG-2

The TC-60 TDC received a summed rating of 53 out of a possible 70. The DAVINCH DV65 and the Dynasafe SDC2000 received summed ratings of 59 and 58, respectively (see Table 4-4).

Finding 4-3. The DAVINCH DV65 and the Dynasafe SDC2000 are rated approximately equally and slightly higher than the TC-60 TDC for Requirement BG-2.

Recommendation 4-3. The Army should give preference to the use of the DAVINCH DV65 or the Dynasafe SDC2000 for Requirement BG-2, the destruction of 15,000 mustard-filled projectiles at BGCAPP. The TC-60 TDC is rated lower but would also be acceptable.

REQUIREMENT BG-3: DESTRUCTION OF APPROXIMATELY 70,000 NONCONTAMINATED M55 ROCKET MOTORS AND APPROXIMATELY 15,000 MUSTARD AGENT H-FILLED 155-MM PROJECTILES AT BLUE GRASS

As was the case for Requirement BG-1, the EDS is not evaluated for Requirement BG-3 because it is not able to destroy rocket motors. The D-100 is not able to process mustard agent-filled projectiles and is likewise not evaluated. As noted in the introduction to this chapter, however, the combination of two CH2M HILL technologies, the D-100 and the TC-60 TDC, is evaluated for Requirement BG-3. The D-100 is used for destruction of the 70,000 noncontaminated M55 rocket motors, and the TC-60 TDC is used for the destruction of the 15,000 mustard agent-filled 155-mm projectiles.

Process Maturity

D-100 and TC-60 TDC Combination

See the discussion in the section “Process Maturity” for the D-100 for Requirement BG-1 and the discussion in that same section for the TC-60 TDC for Requirement BG-2.

Copyright © National Academy of Sciences. All rights reserved.

Assessment of Explosive Destruction Technologies for Specific Munitions at the Blue Grass and Pueblo Chemical Agent Destruction Pilot Plants
http://www.nap.edu/catalog/12482.html

DAVINCH

The discussions provided for Requirements BG-1 and BG-2 apply.

SDC2000

See the discussions for the SDC2000 in the "Process Maturity" sections for Requirements BG-1 and BG-2.

Requirement BG-3 Ratings for Process Maturity

For the process maturity criterion for Requirement BG-3, the committee assigned a rating of 6 to the D-100 and TC-60 TDC combination, a rating of 8 to the DAVINCH DV65, and a rating of 7 to the Dynasafe SDC2000.

Process Efficacy

D-100 and TC-60 TDC Combination

See the discussion in the section "Process Efficacy" for the D-100 for Requirement BG-1 and the discussion in the section of the same name for the TC-60 TDC for Requirement BG-2.

DAVINCH

The discussions provided for Requirements BG-1 and BG-2 apply.

SDC2000

See the discussions in the "Process Efficacy" sections for Requirements BG-1 and BG-2.

Requirement BG-3 Ratings for Process Efficacy

For the evaluation of process efficacy for Requirement BG-3, the committee assigned a rating of 7 to the D-100 and TC-60 TDC combination and ratings of 9 to both the DAVINCH DV65 and the Dynasafe SDC2000.

Copyright © National Academy of Sciences. All rights reserved.

Assessment of Explosive Destruction Technologies for Specific Munitions at the Blue Grass and Pueblo Chemical Agent Destruction Pilot Plants
http://www.nap.edu/catalog/12482.html

Process Throughput

D-100 and TC-60 TDC Combination

The committee projects the D-100 would require about 1.2 to about 2.5 years to destroy the 70,000 noncontaminated M55 rocket motors, and the TC-60 TDC would require about 2.8 to about 5.7 years to destroy the 15,000 mustard agent-filled projectiles. However, parallel operation is possible. Thus, depending on whether the campaigns are done sequentially or in parallel, the projected campaign length range would be either 2.8 to 5.7 years for parallel operation or 4.1 to 8.2 years for sequential operation.

DAVINCH

Processing 70,000 rocket motors and 15,000 155-mm projectiles in the DV65 at the throughput rates provided by the manufacturer (36/day and 18/day, respectively) would take 2,779 days or 463 weeks (8.9 years) assuming a 6-day operating week. The committee thus projects a campaign length range of about 8.9 to about 17.8 years. Using the larger proposed DV120, the time required would be 1,389 days or 232 weeks (4.5 years), again for a 6-day operating week and assuming that the manufacturer's stated throughput rates of 72 rocket motors and 36 155-mm projectiles per day can be achieved and sustained. The committee thus projects a campaign length range of 4.5 to 8.9 years.

SDC2000

The Dynasafe SDC2000 could destroy the 70,000 noncontaminated rocket motors in 700 days at a rate of 100 per 10-hour day and the 15,000 mustard agent-filled projectiles in 500 days at a rate of three per hour in a 10-hour day. A total of 1,200 operating days (200 6-day weeks, 3.85 years) would be required.

Requirement BG-3 Ratings for Process Throughput

Throughput rates for each technology and requirement are given in Table 4-2, as are the schedule implications for these rates. These are best-case times and do not reflect downtimes for scheduled and unscheduled maintenance, facility downtime, ramp-ups, and changeovers. They are only intended to illustrate the relative times required for destroying the noncontaminated rocket motors and/or 155-mm mustard agent-filled projectiles at BGAD using each technology.

Requirement BG-3 is the requirement that benefits the most from employing a technology with a high throughput. The projected campaign length range for the D-100 and TC-60 combination would be about 2.8 to about 5.7 years if the campaigns are done in parallel or about 4.1 to about 8.2 years if the campaigns are done sequentially. This combination was assigned a rating of 8. The projected campaign length range for the DV65 is about 8.9 to about 17.8 years, and the projected campaign length range for the

Copyright © National Academy of Sciences. All rights reserved.

Assessment of Explosive Destruction Technologies for Specific Munitions at the Blue Grass and Pueblo Chemical Agent Destruction Pilot Plants
http://www.nap.edu/catalog/12482.html

proposed DV120 is about 4.5 to about 8.9 years. The DAVINCH technology was therefore rated a 5. The projected campaign length range for the SDC2000 is about 3.9 to about 7.7 years, and it was rated a 9.

Process Safety

D-100 and TC-60 TDC Combination

See the discussion in the section "Process Safety" for the D-100 for Requirement BG-1 and the discussion in the section of that same name for the TC-60 TDC for Requirement BG-2.

DAVINCH

See the discussions in the section "Process Safety" for the DAVINCH for Requirements BG-1 and BG-2.

SDC2000

The discussions in the sections "Process Safety" for Requirements BG-1 and BG-2 for the SDC2000 apply.

Requirement BG-3 Ratings for Process Safety

For the process safety criterion for Requirement BG-3, the committee assigned a rating of 7 to the D-100 and TC-60 TDC combination, a rating of 8 to the DAVINCH DV65, and a rating of 9 to the Dynasafe SDC2000.

Public and Regulatory Acceptability in a U.S. Context

D-100 and TC-60 TDC Combination

See the discussion in the section "Public and Regulatory Acceptability" for the D-100 for Requirement BG-1 and the discussion in the section of the same name for the TC-60 TDC for Requirement BG-2.

DAVINCH

The earlier discussions for Requirements BG-1 and BG-2 apply to the regulatory aspects of destroying M55 rocket motors and mustard agent projectiles in the DAVINCH.

Copyright © National Academy of Sciences. All rights reserved.

Assessment of Explosive Destruction Technologies for Specific Munitions at the Blue Grass and Pueblo Chemical Agent Destruction Pilot Plants
http://www.nap.edu/catalog/12482.html

SDC2000

The discussions for Requirements BG-1 and BG-2 apply. When processing noncontaminated rocket motors, the scrubber salts might be hazardous owing to the presence of lead.

Requirement BG-3Ratings for Public and Regulatory Acceptability in a U.S. Context

The D-100 and TC-60 TDC combination was given a rating of 9 because both systems have been through the permitting process in the United States—the D-100 at Milan Army Ammunition Plant and the TC-60 at Schofield Barracks. The TC-60 has had some operating experience in the United States, and the D-100 has had considerable experience. The DAVINCH was assigned a lower rating, 7, since it has not yet received an operating permit in the United States. The SDC2000 was also rated at 7.

Secondary Waste Issues

D-100 and TC-60 TDC Combination

See the discussion in the "Secondary Waste Issues" section for the D-100 for Requirement BG-1 and the discussion in the "Secondary Waste Issues" section for the TC-60 TDC for Requirement BG-2.

DAVINCH

The same waste streams noted in the previous discussions on use of the DAVINCH for Requirements BG-1 and BG-2 apply.

SDC2000

The discussions for Requirement BG-1 and BG-2 apply.

Requirement BG-3 Ratings for Secondary Waste Issues

For the secondary waste issues evaluation factor for Requirement BG-3, the committee assigned a rating of 8 to the D-100 and TC-60 TDC combination, a rating 9 to the DAVINCH DV65, and a rating of 7 to the SDC2000.

Copyright © National Academy of Sciences. All rights reserved.

Assessment of Explosive Destruction Technologies for Specific Munitions at the Blue Grass and Pueblo Chemical Agent Destruction Pilot Plants
http://www.nap.edu/catalog/12482.html

Destruction Verification Capability

This criterion is not applicable to the destruction of noncontaminated M55 rocket motors (Requirement BG-1) but is applicable to mustard agent-filled projectiles (Requirement BG-2).

D-100 and TC-60 TDC Combination

See the section "Destruction Verification Capability" for Requirement BG-2 for the TC-60 TDC.

DAVINCH

See the section "Destruction Verification Capability" for Requirement BG-2 for DAVINCH DV65.

SDC2000

See the section "Destruction Verification Capability" for Requirement BG-2 for the SDC2000.

Requirement BG-3 Ratings for Destruction Verification Capability

For the destruction verification evaluation factor for Requirement BG-3, the committee assigned a rating of 8 to the D-100 and TC-60 TDC combination, a rating of 10 to the DAVINCH DV65, and a rating of 9 to the SDC2000.

Process Flexibility

D-100 and TC-60 TDC Combination

The D-100 and TC-60 TDC combination provides sufficient flexibility to destroy both rocket motors and projectiles.

DAVINCH

The DAVINCH technology possesses sufficient flexibility to destroy both rocket motors and projectiles.

Copyright © National Academy of Sciences. All rights reserved.

Assessment of Explosive Destruction Technologies for Specific Munitions at the Blue Grass and Pueblo Chemical Agent Destruction Pilot Plants
http://www.nap.edu/catalog/12482.html

SDC2000

One issue previously discussed is that the NEW limit for the SDC2000 system at Münster is limited by permit to 2.3 kg, which is one-fourth the NEW of the rocket motor. For a new system constructed just for BGCAPP, Dynasafe claims the NEW limit can be up to 10 kg depending on choice of inner chamber. This is still relatively close to the NEW of a rocket motor, which is 8.8 kg propellant.

The Dynasafe SDC2000 has the ability to destroy 155-mm mustard agent H projectiles. Again, with only the one agent-filled feedstock, process flexibility is not a significant issue. Leaking munitions will have been previously identified and placed in overpacks. Depending on DDESB approvals and other factors, overpacked munitions may or may not be processed in the SDC2000.

Requirement BG-3 Ratings for Process Flexibility

The D-100 and TC-60 TDC combination, the SDC2000, and the DAVINCH DV65 are all sufficiently flexible and are rated 9.

Summary Assessment for Requirement BG-3

D-100 and TC-60 TDC Combination

The D-100 and TC-60 TDC combination is a strong candidate for Requirement BG-3. The projected campaign length for the combination would be about 2.8 to about 5.7 years if the campaigns are carried out in parallel or about 4.1 to about 8.2 years if done sequentially. Again, the Army must continue to upgrade the unit operations of the TC-60 TDC. The D-100 and similar systems have carried out campaigns of the same magnitude as would be encountered for Requirement BG-3.

DAVINCH

The DAVINCH technology would be a strong candidate for Requirement BG-3, especially if the proposed DV120 vessel were used to increase throughput. The technology is robust, has operating experience in destroying both bombs and projectiles in applications in two countries, and is capable of achieving high DREs, reducing agent concentrations to below limits of detection. It has the ability to hold and test waste streams and, if necessary, to reprocess gaseous waste streams by recycling them through the vessel and offgas treatment system.

Copyright © National Academy of Sciences. All rights reserved.

Assessment of Explosive Destruction Technologies for Specific Munitions at the Blue Grass and Pueblo Chemical Agent Destruction Pilot Plants
http://www.nap.edu/catalog/12482.html

SDC2000

The Dynasafe SDC2000 is also a strong candidate for Requirement BG-3. This EDT could execute Requirement BG-3 in a reasonable length of time based on its throughput. It has destroyed large numbers of munitions in Germany without any reported problems. It has a distinct safety advantage with respect to Requirement BG-3 because it minimizes handling by the operating staff and does not require the storing of additional donor explosives near the unit during operations. It has not been permitted in the United States, however, and this introduces uncertainty. The vendor has indicated that it will use a new pollution control system, which has been outlined but not designed, built, or tested.

Overall Ratings for Requirement BG-3

The summed rating for the D-100 and TC-60 combination is 62, the summed rating for the DAVINCH DV65 is 65, and the summed rating for the SDC2000 is 66. The EDS is not suitable for Requirement BG-3. Thus, the D-100 and TC-60 TDC combination, the DAVINCH DV65, and the SDC2000 are all rated about the same and are all viable candidates (Table 4-5).

Finding 4-4. The CH2M HILL D-100 and TC-60 TDC combination, the DAVINCH DV65, and the Dynasafe SDC2000 technologies are rated approximately the same, and are all acceptable candidates for Requirement BG-3, although the time needed for use of a single DV65 operating 60 hours per week might be considered excessively long by the Army. All will require testing or further testing before a final selection can be made.

Recommendation 4-4. If the results of testing on rocket motor destruction are favorable for all of the explosive destruction technologies suitable to this task, the Army could use either the CH2M HILL D-100 and TC-60 TDC combination, the DAVINCH DV65, or the Dynasafe SDC2000 technology for Requirement BG-3. The campaign length for use of a single DV65 operating at 60 hours per week might be considered excessively long by the Army.

REQUIREMENT P-1: DESTRUCTION OF ALL LEAKERS AND REJECT MUNITIONS AT PUEBLO COMPRISING APPROXIMATELY 1,000 ROUNDS OF A MUSTARD AGENT HD/HT-FILLED MIXTURE OF 4.2-in. MORTARS, AND 105- AND 155-mm PROJECTILES

Table 1-3 in Chapter 1 lists currently stored overpacked munitions at Pueblo Chemical Depot (PCD). Most are 105-mm and 155-mm HD- or HT-filled projectiles.[19] This list is expected to grow to about 1,000 munitions as destruction of munitions proceeds in the main processing unit at the Pueblo Chemical Agent Destruction Pilot

[19] HT is distilled mustard mixed with bis[2-(2chloroethylthio) ethyl] ether.

Copyright © National Academy of Sciences. All rights reserved.

Assessment of Explosive Destruction Technologies for Specific Munitions at the Blue Grass and Pueblo Chemical Agent Destruction Pilot Plants
http://www.nap.edu/catalog/12482.html

Plant (PCAPP) facility. According to the PMACWA, processing these units in an EDT will significantly shorten the schedule and reduce risk to the operating staff by minimizing the requirement for intermediate storage with multiple handling requirements. The EDT can also be used to destroy contaminated energetics and bursters as indicated in Figure 1-2.

The processing of these approximately 1,000 rounds can be spread out over a long period of time (1 year at least). Thus, a significant characteristic of Requirement P-1 is that it does not require as high a throughput rate as Requirements BG-1, BG-2, and BG-3. In addition, the explosive load of these munitions is relatively small.

Process Maturity

TC-60 TDC

See the TC-60 "Process Maturity" section for Requirement BG-2. In addition to the points made there, it should be noted that in the destruction campaign of recovered chemical warfare materiel in Hawaii in 2008, one munition was destroyed while still contained within a prop charge can.[20] Destruction of a munition in this manner may at times offer some advantages, especially by reducing risk to the operators who would otherwise have to remove a leaking munition from its overpack. Destruction of munitions while still in their overpacks might be employed for Requirement P-1.[21]

DAVINCH

This is a mature technology for chemical agent destruction that demonstrated the ability to destroy artillery projectiles in Belgium that were similar to the 105-mm and 155-mm projectiles at Pueblo and to destroy recovered bombs in Japan that had a 50 percent mustard agent fill, the same agent stored at PCD. In both Japan and Belgium, donor explosives were successfully used to shatter thick-walled steel munitions (the largest Belgian shell was 28 mm thick). The largest munition destroyed in Japan, the 50-kg Yellow bomb, had a diameter of 200 mm and a length of 1 m. The largest item destroyed in Belgium, the 21-cm shell, had a diameter of 210 mm and a length of 0.8 m. Both of these exceed the size of the 155-mm M104 and M110 projectiles at PCD. The manufacturer has done testing on the disposal of munitions in overpacks and munitions encased in concrete during a campaign in Belgium concurrent with the preparation of this report.

DAVINCH has not been RCRA-permitted in the United States. It would have to undergo the equivalent of trial burns with agent or an agent surrogate. This could delay implementation of the DAVINCH at PCD.

---

[20]David Hoffman, CMA, "Transportable detonation chamber (TDC) at Schofield Barracks," presentation to the committee, May 29, 2008.

[21]Personal communication between Allan Caplan, System Development Group Leader, Non-Stockpile Chemical Materiel Project, and James Pastorick, committee member, August 27, 2008.

Copyright © National Academy of Sciences. All rights reserved.

Assessment of Explosive Destruction Technologies for Specific Munitions at the Blue Grass and Pueblo Chemical Agent Destruction Pilot Plants
http://www.nap.edu/catalog/12482.html

SDC2000

See the SDC2000 discussion in the section "Process Maturity" for Requirement BG-2. SDC2000 is a mature technology for destruction of this type of chemical weapon. As indicated in Chapter 3, over 13,000 recovered munitions were destroyed at the Münster facility. Also described in Chapter 3 is the 3-day test series carried out at Münster, Germany, to demonstrate that the Dynasafe system could effectively destroy mustard agent-filled munitions. The technology has not been demonstrated in the United States. Also, the manufacturer has indicated it will modify the air pollution control system used at Münster for use in the United States. The modified system must therefore be designed, built, and tested. The manufacturer claims that munitions in overpacks can be fed directly into the system.

EDS-2

The EDS Phase 2 (EDS-2) is a mature technology for chemical agent destruction and has been demonstrated in the United States for all the weapons types that would be encountered at PCD. It has performed very satisfactorily in an assignment similar to Requirement P-1—namely, the destruction of over 1,200 old chemical munitions at Pine Bluff Arsenal. In the course of doing so, an efficient procedure for operating paired EDS-2s was developed. In the current evaluation, it is assumed that a pair of EDS-2s would be operated at PCD to provide an adequate throughput for Requirement P-1. Because the EDS-2 donor charge is used solely to cut open the munition and detonate the burster charge, the quantity of explosive is relatively small. The EDS-2 is routinely operated in a hold-test-release mode.

The throughput rate of the EDS-2 is low, especially for large munitions like the 155-mm projectile, and the process produces more liquid waste than the vendor-supplied EDTs, but neither problem seems serious in the context of the task to be done at PCD.

Requirement P-1 Ratings for Process Maturity

For the process maturity evaluation factor for Requirement P-1 the committee assigned a rating of 8 to both the TC-60 TDC and the DAVINCH DV65, a rating of 7 to the Dynasafe SDC2000, and a rating of 10 to the EDS-2.

Process Efficacy

TC-60 TDC

See the "Process Efficacy" section for the TC-60 TDC under Requirement BG-2. See also the comments on destruction of munitions in overpacks in the preceding section "Process Maturity" for Requirement P-1, above.

Copyright © National Academy of Sciences. All rights reserved.

Assessment of Explosive Destruction Technologies for Specific Munitions at the Blue Grass and Pueblo Chemical Agent Destruction Pilot Plants
http://www.nap.edu/catalog/12482.html

DAVINCH

The DAVINCH technology should be able to process the roughly 1,000 leaking and reject munitions at PCD. It has, to date, safely destroyed over 2,500 chemical bombs and projectiles in applications in Japan and Belgium, some of which have been larger and contained more explosives than the largest projectile to be destroyed at PCD (2.75 kg TNT-equivalent in the 150-mm shell vs. 0.19 kg TNT-equivalent in the 155-mm projectile). The explosive capacity is adequate to dispose of the leakers and rejects in at least some of the overpacks used. The DV60 system (nearly identical to the DV65) has been reliable and robust to date, having been used to destroy more than 1,600 bombs in Japan that were filled with a 50:50 mustard:lewisite agent mix.

SDC2000

The Dynasafe SDC2000 has demonstrated the ability to process the types of munitions associated with Requirement P-1. However, it has not been demonstrated in the United States. DEs are high, with final agent concentrations below limits of detection, although they have not been demonstrated with the new air pollution control system proposed for use in the United States. Reliability was good during the operations in Germany.

EDS-2

The EDS-2 has proven it is able to process the types of munitions that are associated with Requirement P-1. Agent is destroyed to below acceptable levels, typically 1 VSL. The system is transportable, robust, and very reliable.

Requirement P-1 Ratings for Process Efficacy

For the process efficacy factor for Requirement P-1, the committee assigned a rating of 4 to the TC-60 TDC, ratings of 9 to both the DAVINCH DV65 and the Dynasafe SDC2000, and a rating of 10 to the EDS-2.

Process Throughput

TC-60 TDC

The TC-60 TDC has demonstrated throughput of one munition per 35-minute cycle in operations at Porton Down in the United Kingdom. At this rate and assuming that one munition is destroyed per cycle, 17 munitions would be destroyed per 10-hour day, or 102 munitions per 6-day operating week. The 1,000 munitions at Pueblo would be destroyed in about 10 weeks. The campaign is projected to last about 10 to 20 weeks.

Copyright © National Academy of Sciences. All rights reserved.

Assessment of Explosive Destruction Technologies for Specific Munitions at the Blue Grass and Pueblo Chemical Agent Destruction Pilot Plants
http://www.nap.edu/catalog/12482.html

Even if the throughput is decreased significantly when munitions in overpacks are processed, the rates should still be more than adequate.

DAVINCH

The time required for processing leaking projectiles and mortar rounds in a DAVINCH vessel at Pueblo will depend on the number of each type of munition, the DAVINCH unit used, and possibly, the configuration of the munitions—for example, the type of overpack used. The DAVINCH manufacturer claims that the DV65 can process six 4.2-in. mortar rounds per shot and six 105-mm projectiles per shot, both for nine shots per 10-hour day. For the larger 155-mm projectile, two items would be processed per shot, again at a rate of nine shots per day.

If the inventory of leaking munitions at Pueblo consists of about 1,000 items (about 500 known leakers and a similar number of yet-to-be-found leakers and reject munitions) and if it is assumed that they exist in equal proportions (one-third 4.2-in. mortar rounds, one-third 105-mm projectiles, and one-third 155-mm projectiles), then at the processing rates claimed, it would take 6.1 days to destroy the mortar rounds, another 6.1 days to destroy the 105-mm projectiles, and 19 days to destroy the 155-mm projectiles. The total time would be 31 days, or about 5 six-day operating weeks. The projected campaign length range is thus from about 5 weeks to about 10 weeks.

SDC2000

Assume as for the DAVINCH that about 333 each of 155-mm projectiles, 105-mm projectiles, and 4.2-in. mortar rounds are to be destroyed. The throughput rates given in Table 4-7 in Appendix A are 40 munitions per 10-hour day for 155-mm projectiles and 120 munitions per day for both 105-mm projectiles and 4.2-in. mortars. Thus, the total operating time is about 15 days, and the projected campaign length range is about 5 to 10 weeks. These are very short times, and they argue for using a smaller system than the SDC2000. It would be especially beneficial if a transportable version of the Dynasafe technology could be used, although the committee is not aware that any such system exists. The throughput rate for overpacked munitions of the size that will be processed at PCD is anticipated to be about one munition per hour.[22]

EDS-2

The EDS-2 has a relatively low throughput of one 155-mm projectile every 2 days but can destroy six 4.2-in. mortars in the same period. It has been demonstrated that two 105-mm projectiles can be destroyed per detonation, but it is likely that six 105s can be done at once.[23] In ongoing operations at the Pine Bluff Arsenal, three EDSs—one EDS

[22]Personal communication between Harley Heaton, Vice President for Research, UXB International, Inc., and Margaret Novack, NRC, study director, July 17, 2008.

[23]Personal communication between Allan Caplan, System Development Group Leader, Non-Stockpile Chemical Materiel Project, and Margaret Novack, NRC, study director, August 19, 2008.

Copyright © National Academy of Sciences. All rights reserved.

Assessment of Explosive Destruction Technologies for Specific Munitions at the Blue Grass and Pueblo Chemical Agent Destruction Pilot Plants
http://www.nap.edu/catalog/12482.html

Phase 1 (EDS-1) and two EDS-2s, only two of them operated at a time—destroyed 1,065 munitions in less than 3 years. If, as in the throughput calculation for the DAVINCH, it is assumed that the 1,000 munitions at PCD are equally divided among mortars, 105-mm projectiles, and 155-mm projectiles, destroying the 155-mm projectiles would take 333 operating cycles, or 666 days. The mortars would require 56 cycles, or 112 days. If the 105-mm projectiles can be done six at a time (not yet verified), these items would require 56 cycles, or 112 operating days. Overall, it would require 890 operating days to destroy all the munitions under consideration at PCD. The projected campaign will take from about 2.9 to about 5.7 years. A pair of EDS-2s operating as at Pine Bluff could complete the mission in 445 operating days, for a projected campaign length of about 1.4 years to about 2.9 years.

The EDS can theoretically dispose of munitions in some of the overpacks used. This requires that larger shaped charges be used to cut through both the overpack and the munition. This process is complicated by the need to accurately aim the shaped charges at the munition, which cannot be seen inside the overpack, and by the possibility that the munitions in the overpacks will not open properly. This is likely to adversely affect throughput and safety and adds complexity and uncertainty to the process of disposing of overpacked munitions in the EDS. Removing the overpacked munitions from their overpacks before processing might be preferable.

Requirement P-1 Ratings for Process Throughput

The throughput of the EDS-2 is marginal for Requirement P-1. If only one EDS-2 is used, the campaign is projected to last from of about 2.8 to about 5.7 years. Alternatively, the Army could choose to use more than one EDS, significantly reducing the length of the campaign. The EDS-2 is rated 10. The TC-60 TDC, the DAVINCH DV65, and the Dynasafe SDC2000 all have more than adequate throughput capacity for this requirement and are also rated 10.

Process Safety

TC-60 TDC

See the TC-60 section “Process Safety” for Requirement BG-2. The ability to destroy a leaking or reject munition while it is still in its overpack, as was done once during the campaign at Schofield Barracks, will enhance operational safety.

DAVINCH

The same factors affecting process safety that were discussed for Requirement BG-2 (processing mustard agent-filled 155-mm projectiles at BGAD) apply to the processing of the three munition types at PCD since the same DAVINCH operations are involved. The large explosive containment capacity allows the DAVINCH system to dispose of munitions in some of the overpacks used.

Copyright © National Academy of Sciences. All rights reserved.

Assessment of Explosive Destruction Technologies for Specific Munitions at the Blue Grass and Pueblo Chemical Agent Destruction Pilot Plants
http://www.nap.edu/catalog/12482.html

SDC2000

See the section "Process Safety" for Requirement BG-2 for the SDC2000. The manufacturer claims that the munitions in overpacks can be fed directly into the system and that the high temperature in the chamber will cause the overpacks and munitions to be breached and the agent released.

EDS-2

The EDS-2 necessitates individual handling of the munitions and manual attachment of shaped charges to the munitions. The likelihood of a misfire is greatly reduced by redundant firing circuits. This technology requires the storage of modest quantities of explosives in the vicinity of the unit, which creates an additional hazard. The destruction of a munition in an overpack through the use of larger shaped charges has been demonstrated but is not done routinely at Pine Bluff and is not feasible for some overpacked munitions at PCD. The added complexity and uncertainty associated with destroying munitions in overpacks might create a hazard if the munitions cannot be fully opened. Thus, removal of the overpacked munitions from their overpacks before processing might be preferable.

Requirement P-1 Ratings for Process Safety

For the process safety factor for Requirement P-1, the committee rated the TC-60 TDC at 7, the DAVINCH DV65 at 8, the Dynasafe SDC2000 at 9, and the EDS at 7.

Public and Regulatory Acceptability in a U.S. Context

TC-60 TDC

See the TC-60 section "Public and Regulatory Acceptability" for Requirement BG-2.

DAVINCH

The same factors involved in evaluating the public and regulatory acceptability of the DAVINCH for processing 155-mm mustard agent-filled projectiles at Blue Grass should also apply to Pueblo.

Copyright © National Academy of Sciences. All rights reserved.

Assessment of Explosive Destruction Technologies for Specific Munitions at the Blue Grass and Pueblo Chemical Agent Destruction Pilot Plants
http://www.nap.edu/catalog/12482.html

SDC2000

See the section "Public and Regulatory Acceptability" for Requirement BG-2 for the SDC2000.

EDS-2

The EDS systems (EDS-1 and EDS-2) have been permitted for use at several locations in the United States. They have not experienced significant public opposition even for their use in urban locations. In addition, the EDS has already received regulatory approval for operation in Colorado for destroying GB-filled bomblets. Its routine use in a hold-test-release mode and the absence of an oxidizing offgas treatment operation have contributed to EDS acceptance. The DDESB has approved it on a systemwide basis.

Requirement P-1 Ratings for Public and Regulatory Acceptability in a U.S. Context

The TC-60 TDC has been permitted in the United States and encountered no public or regulatory opposition. However, because it does not have as much experience in the United States as the EDS, it is rated at 9. The DAVINCH DV65 was assigned a still lower rating of 7 because it has not been permitted in the United States. The Dynasafe SDC2000 would have a pollution abatement system that is not completely described and has not been built or tested. It is rated a 7. The EDS is rated at 10 because it has been granted several operating permits in the United States and has had no significant public opposition to its use.

Secondary Waste Issues

The mercury concentrations in the HD and HT mustard agent contained in the munitions at PCAPP are expected to be significantly higher than concentrations in the H mustard agent contained in the munitions at BGCAPP.[24] Thus, wastes generated at an EDT installation at PCAPP by any of the candidate technologies should be tested for mercury to determine if concentrations are above levels of regulatory concern.

TC-60 TDC

See the "Secondary Waste Issues" section discussion of the TC-60 TDC for Requirement BG-2. Also, note the discussion on mercury concentrations above.

[24]Personal communication between Richard Ward, Chief Scientist, PMCSE, CMA, and Richard Ayen, committee chair, at the CMA Committee meeting on September 19, 2008.

Copyright © National Academy of Sciences. All rights reserved.

Assessment of Explosive Destruction Technologies for Specific Munitions at the Blue Grass and Pueblo Chemical Agent Destruction Pilot Plants
http://www.nap.edu/catalog/12482.html

DAVINCH

See the section "Secondary Waste Issues" for Requirement BG-2 for the DAVINCH DV65. Also, note the discussion on mercury concentrations above.

Although the actual volume and constituents of the waste streams generated can be estimated, these have yet to be determined since they will depend on the nature of the overpacks used and the internal constituents of the munitions.

SDC2000

Note the preceding discussion of mercury concentrations. The scrap metal resulting from the munition bodies is suitable for unrestricted release; however, it is a listed waste in Colorado and can therefore be sent only to a hazardous waste TSDF or to a recycler allowed to receive it, such as the Rock Island smelter.

EDS-2

The EDS-2 produces between 8 and 10 gallons of liquid secondary waste per detonation. This puts it at a disadvantage in comparison with the vendor-supplied technologies. However, for Requirement P-1, where there are only a small number of munitions and a much larger volume of liquid secondary waste is produced in the main processing units of PCAPP, this disadvantage seems minimal. The concentration of agent in the liquid waste is measured to ensure it is low enough to be released. The ability to control mercury emissions (see discussion on mercury concentrations above) has been demonstrated.

The solid wastes are primarily scrap metal from destruction of the munition bodies, bursters, and fuzes. The release level for this material is ≤1VSL. If problems arise with residual mustard contamination in the scrap metal, the metal could be decontaminated by thermal treatment in the main plant.

Requirement P-1 Ratings for Secondary Waste Issues

For the secondary waste issues criterion for Requirement P-1,the committee assigned a rating of 8 to the TC-60 TDC, a rating of 9 to the DAVINCH DV65, a rating of 7 to the Dynasafe SDC2000, and a rating of 6 to the EDS-2.

Destruction Verification Capability

TC-60 TDC

See the TC-60 "Destruction Verification Capability" section for Requirement BG-2.

Copyright © National Academy of Sciences. All rights reserved.

DAVINCH

See the "Destruction Verification Capability" section for Requirement BG-2 for the DAVINCH DV65.

SDC2000

See the "Destruction Verification Capability" section for Requirement BG-2 for the SDC2000.

EDS-2

The EDS-2 has the ability to hold, test, and verify that agent destruction has been completed to the extent required before the secondary liquid waste is released from the unit and passed to storage. Munition bodies are destroyed.

Requirement P-1 Ratings for Destruction Verification Capability

The committee assigned ratings of 10 to the EDS and the DAVINCH for this factor because of their ability to hold and test effluents prior to release. The Dynasafe SDC2000 and the TC-60 TDC received lower ratings of 9.

Process Flexibility

TC-60 TDC

The TC-60 TDC is highly flexible in the size and number of munitions that it can process. It is expected to be able to destroy the munitions in their overpacks if destruction in overpacks was allowed by the applicable regulatory permits and DDESB. One munition was destroyed in its overpack during the operations at Schofield Barracks.

DAVINCH

The DAVINCH technology is flexible in that the vessel size can be adjusted to accommodate the explosion containment requirements for the three munitions to be destroyed at Pueblo, the quantity of donor explosives needed can be adjusted to ensure that the agent is accessed, and a variety of agents can be destroyed in the vessel (although this last capability is not necessary for Requirement P-1). The large explosive containment capacity allows the DAVINCH system to dispose of munitions in some of the overpacks used.

Copyright © National Academy of Sciences. All rights reserved.

Assessment of Explosive Destruction Technologies for Specific Munitions at the Blue Grass and Pueblo Chemical Agent Destruction Pilot Plants
http://www.nap.edu/catalog/12482.html

The impact on processing operations of handling, placing explosive charges around, and destroying overpacked munitions needs to be demonstrated. Leaking munitions may require handlers to wear a higher level of PPE, observe more stringent safety precautions, and allow more time per shot for placing donor and shaped charges, especially if the munitions are contained within overpacks. As a result, throughput rates could be lower than those estimated by the manufacturer.

SDC2000

The Dynasafe SDC2000 has great flexibility in the size and number of munitions that it can process. The manufacturer claims that the munitions in overpacks can be fed directly into the system and that the high temperature in the chamber will cause the overpacks and munitions to be breached and the agent released.

EDS-2

The EDS-2 has been demonstrated to destroy all the types of munitions specified in requirement P-1. It has a low throughput of one 155-mm projectile every 2 days but can destroy six 4.2-in. mortars in the same period. However, for Requirement P-1, this is not a significant concern. It can destroy some munitions in overpacks, but the 12 × 56-in. single round containers are too large to fit in the EDS-2 chamber. Only 31 105-mm projectiles are singly overpacked in these large single round containers. They could be unpacked for destruction, as is done at Pine Bluff.

Requirement P-1 Ratings for Process Flexibility

All four technologies have adequate flexibility for Requirement P-1 and were rated at 10.

Summary Assessment for Requirement P-1

See Table 4-6 for a summation of the overall ratings for Requirement P-1.

TC-60 TDC

The TC-60 TDC could execute Requirement P-1 and is expected to be able to destroy munitions in overpacks if allowed by permits and DDESB approval.

DAVINCH

The DAVINCH technology should be capable of destroying the roughly 1,000 leaking and reject munitions (projectiles and mortar rounds) at PCD since it has destroyed a

Copyright © National Academy of Sciences. All rights reserved.

Assessment of Explosive Destruction Technologies for Specific Munitions at the Blue Grass and Pueblo Chemical Agent Destruction Pilot Plants
http://www.nap.edu/catalog/12482.html

greater number of similar items elsewhere and has demonstrated the ability to destroy mustard agent. The time required to accomplish this should be well within the time available. The technology has not been permitted in the United States. The public is not very aware of the DAVINCH technology, but it is nonetheless likely to be accepting of it

SDC2000

The Dynasafe SDC2000 could execute Requirement P-1 in the required time. It has not been permitted in the United States. The pollution abatement system for an installation in the United States has not been designed, built, or tested, another disadvantage.

EDS-2

The EDS-2 is well suited for Requirement P-1. The committee notes that three EDS-2s will soon be available for Requirement P-1. Two are completing their assignment at Pine Bluff Arsenal and a third is under construction. The EDS has an advantage over the other three systems with respect to maturity and its hold, test, release feature is a further advantage.

Summary Finding and Recommendation for Requirement P-1

The EDS-2 has the highest summed rating, 73 out of a possible 80. The DAVINCH DV65 is second with a rating of 71. The Dynasafe SDC2000 has a rating of 68 and the TC-60 TDC is rated at 65.

Finding 4-5. The EDS-2 is well suited for Requirement P-1. It has an advantage over the other three systems with respect to "maturity." Its hold-test-release feature is an advantage. The DAVINCH DV65 is a close second choice. The Dynasafe SDC2000 the TC-60 TDC are also acceptable choices.

Recommendation 4-5. For Requirement P-1, the Army should use one or more EDS-2 units or the DAVINCH DV65 technology. The Dynasafe SDC2000 and the TC-60 TDC are also acceptable choices.

REFERENCES

BPBGT (Bechtel Parsons Blue Grass Team). 2004. Blue Grass Chemical Agent-Destruction Pilot Plant Resource Conservation and Recovery Act Research, Development and Demonstration Permit Application, Volume I, Revision 2. Richmond, Ky.: Bechtel Parsons Blue Grass Team.

Copyright © National Academy of Sciences. All rights reserved.

Assessment of Explosive Destruction Technologies for Specific Munitions at the Blue Grass and Pueblo Chemical Agent Destruction Pilot Plants
http://www.nap.edu/catalog/12482.html

CH2M HILL (CH2M HILL Demilitarization, Inc.). 2007. Explosives Safety Submission, Munitions and Explosives of Concern, Commercially Developed Transportable Controlled Detonation Chambers–Models T-25, T-30, and T-60. Chantilly, Va.: CH2M HILL Demilitarization, Inc.

DiBerardo, R., T.A. Blades, and N. McFarlane. 2007. Demonstration/Validation of the TC-60 Controlled Detonation Chamber at Porton Down, U.K., Final Demonstration Test Report, ECBC-SP-021, June. Aberdeen Proving Ground, Md.: Edgewood Chemical and Biological Center.

J. Quimby, "Current status of transportable controlled detonation chambers (CDCs) offered by CH2M HILL," Presentation to the National Defense Industrial Association Global Demilitarization Symposium and Exhibition in Reno, Nevada, in May 2007. Available online at http://www.dtic.mil/ndia/2007global_demil/2007global_demil.html. Last accessed February 18, 2009.

UXB (UXB International, Inc.). 2007. Static Detonation Chamber Testing Using a Dynasafe SDC2000. Richmond, Ky.: Blue Grass Chemical Agent Destruction Pilot Plant.

Copyright © National Academy of Sciences. All rights reserved.

Assessment of Explosive Destruction Technologies for Specific Munitions at the Blue Grass and Pueblo Chemical Agent Destruction Pilot Plants
http://www.nap.edu/catalog/12482.html

TABLE 4-1 Requirements Proposed for EDT Processing of Chemical Stockpile Items at Blue Grass Army Depot and Pueblo Chemical Depot

Requirement No.	Requirement Description
BG-1	Requirement BG-1 is the processing of about 70,000 M55 rocket motors at Blue Grass and about 15, 000 munitions that are not contaminated with agent. Current plans call for shipment of these noncontaminated rocket motors to an off-site location for processing; destruction in an EDT is being considered as an alternative
BG-2	Destruction of all 155-mm mustard agent H projectiles at Blue Grass.
BG-3	Destruction of both noncontaminated M55 rocket motors and mustard agent H projectiles at Blue Grass.
P-1	Destruction of all leakers and reject munitions at Pueblo. About 1,000 mustard agent-filled munitions—a mixture of 4.2-in. mortars, 105-mm projectiles, and 155-mm projectiles—would be destroyed.

Copyright © National Academy of Sciences. All rights reserved.

Assessment of Explosive Destruction Technologies for Specific Munitions at the Blue Grass and Pueblo Chemical Agent Destruction Pilot Plants
http://www.nap.edu/catalog/12482.html

TABLE 4-2 Throughput Rates of Five EDTs and Their Implications for Schedule: Requirements BG-1, BG-2, and BG-3[a, b,]

Requirement	TC-60 TDC	D-100	DV65	Proposed DV120	SDC2000
BG-1: 70,000 rocket motors	N/A	180/day 389 days 65 weeks 1.25-2.50 yrs	36/day 1,945 days 324 weeks 6.23-12.46 yr	72/day 972 days 162 weeks 3.11-6.22 yr	100/day 700 days 117 weeks 2.25-4.5 yr
BG-2: 15,000 155-mm mustard agent projectiles	17/day 882 days 147 weeks 2.83-5.66 yr	N/A[c]	18/day 834 days 139 weeks 2.67-5.34 yr	36/day 417 days 70 weeks 1.34-2.68 yr	30/day 500 days 84 weeks 1.60-3.20 yr
BG-3: 70,000 rocket motors and 15,000 mustard agent projectiles (combined BG-1 and BG-2)	N/A[d]	N/A[d]	2,779 days 463 weeks 8.90-17.8 yr	1,389 days 232 weeks 4.46-8.92 yr	1,200 days 200 weeks 3.85-7.70 yr

[a]Ten-hour operating days, 6-day work weeks, and 52 weeks of operation/year are assumed.

[b]Ranges are shown for the processing times, e.g., the expected processing time (campaign length) for the use of the D-100 to destroy the 70,000 rocket motors at Blue Grass is from 1.25 years to 2.50 years. The lower number is based entirely on the lowest demonstrated elapsed time between detonation events, the number of munitions expected to be destroyed in each detonation event, and operation of the system at this maximum capacity. The inputs for these calculations are shown in the table. Thus, it is expected that 180 rocket motors can be destroyed per day if the D-100 system is operated at its maximum capacity. The 70,000 rocket motors could be destroyed in 389 processing days, corresponding to 65 weeks, or 1.25 years. This is the lower number of the range shown. The second number shown is the upper end of the range and results from doubling the number for the lower end of the range. This is an attempt to account for the effects of scheduled and unscheduled maintenance and other causes of delay.

Note that in certain cases the Army may choose to operate in a fashion that does not relate to the throughput rate capability of the EDT. For example, rocket warheads might br processed through the main plant more slowly than the rocket motors could be destroyed in an EDT. In that case, the Army might choose to destroy the rocket motors in an EDT at the same rate as the warheads are treated in the main plant.

[c] The D-100 is not intended for destroying chemical munitions.

[d] Refer to the entry for Requirement BG-2 for the TC-60 TDC and the entry for Requirement BG-1 for the D-100. Both of these units in combination are necessary to meet Requirement BG-3 because the D-100 is not intended for destroying chemical munitions.

Copyright © National Academy of Sciences. All rights reserved.

TABLE 4-3 EDT Ratings Summary for Requirement BG-1, Destruction of Approximately 70,000 Noncontaminated M55 Rocket Motors at Blue Grass

	Evaluation Factor								
EDT Technology	Process Maturity	Process Efficacy	Process Throughput	Process Safety	Public and Regulatory Acceptability in a U.S. Context	Secondary Waste Issues	Destruction Verification Capability	Process Flexibility	Total
D-100	8	9	10	8	10	9	N/A	N/A	54
DAVINCH DV65	8	9	5	8	7	9	N/A	N/A	46
SDC2000	6	9	8	9	7	7	N/A	N/A	46

NOTE: The above values for each evaluation factor are the average of each committee member's rating on a scale of 0-10. These average values were then summed to arrive at the totals given in the last column. Small differences in the summed ratings, up to about five points, were not considered to be significant by the committee. There was no weighting.

Copyright © National Academy of Sciences. All rights reserved.

TABLE 4-4 EDT Ratings Summary for Requirement BG-2, Destruction of 15,000 Mustard Agent H 155-mm Projectiles at Blue Grass

	Evaluation Factor								
EDT Technology	Process Maturity	Process Efficacy	Process Throughput	Process Safety	Public and Regulatory Acceptability in a U.S. Context	Secondary Waste Issues	Destruction Verification Capability	Process Flexibility	Total
TC-60 TDC	8	4	8	7	9	8	9	N/A	53
DAVINCH DV65	8	9	8	8	7	9	10	N/A	59
SDC2000	7	9	10	9	7	7	9	N/A	58

NOTE: The above values for each evaluation factor are the average of each committee member's rating on a scale of 0-10. These average values were then summed to arrive at the totals given in the last column. Small differences in the summed ratings, up to about five points, were not considered to be significant by the committee. There was no weighting.

Copyright © National Academy of Sciences. All rights reserved.

TABLE 4-5 EDT Ratings Summary for Requirement BG-3, Destruction of Approximately 70,000 Noncontaminated M55 Rocket Motors and 15,000 Mustard Agent H 155-mm Projectiles at Blue Grass

	Evaluation Factor								
EDT Technology	Process Maturity	Process Efficacy	Process Throughput	Process Safety	Public and Regulatory Acceptability in a U.S. Context	Secondary Waste Issues	Destruction Verification Capability	Process Flexibility	Total
D-100 and TC-60 TDC Combination	6	7	8	7	9	8	8	9	62
DAVINCH DV65	8	9	5	8	7	9	10	9	65
SDC2000	7	9	9	9	7	7	9	9	66

Note: The above values for each evaluation factor are the average of each committee member's rating on a scale of 0-10. These average values were then summed to arrive at the totals given in the last column. Small differences in the summed ratings, up to about five points, were not considered to be significant by the committee. There was no weighting.

Copyright © National Academy of Sciences. All rights reserved.

TABLE 4-6 EDT Ratings Summary for Requirement P-1, Destruction of All Leakers and Reject Munitions at Pueblo Comprising Approximately 1,000 Rounds of a Mustard Agent HD/HT-Filled Mixture of 4.2-in. Mortars and 105- and 155-mm Projectiles

	Evaluation Factor								
EDT Technology	Process Maturity	Process Efficacy	Process Throughput	Process Safety	Public and Regulatory Acceptability in a U.S. Context	Secondary Waste Issues	Destruction Verification Capability	Process Flexibility	Total
TC-60 TDC	8	4	10	7	9	8	9	10	65
DAVINCH DV65	8	9	10	8	7	9	10	10	71
SDC2000	7	9	10	9	7	7	9	10	68
EDS*	10	10	10	7	10	6	10	10	73

[a] These ratings are based on the use of two EDS-2 units.

NOTE: The above values for each evaluation factor are the average of each committee member's rating on a scale of 0-10. These average values were then summed to arrive at the totals given in the last column. Small differences in the summed ratings, up to about five points, were not considered to be significant by the committee. There was no weighting.

Copyright © National Academy of Sciences. All rights reserved.

Copyright © National Academy of Sciences. All rights reserved.

Appendix A

Chapter 4 from the 2006 NRC report *Review of International Technologies for Destruction of Recovered Chemical Warfare Materiel*

Copyright © National Academy of Sciences. All rights reserved.

4

Tier 1 International Munitions Processing Technologies

INTRODUCTION

In the course of its information gathering, the committee recognized that one particular type of international technology has risen to prominence in addressing the cleanup of old and abandoned chemical weapons at sites in other countries. Detonation-type destruction technologies rely on the ability of the energy from explosive charges within a containment vessel to efficiently destroy recovered chemical munitions and the agent and energetics contained therein.

There are several versions of detonation-type technologies. An earlier version of the controlled detonation chamber (CDC) was reviewed by a previous National Research Council committee.[1] Since then, this technology has undergone further development and implementation in several European venues. Meanwhile, two more recent examples of detonation-type technologies that are in use or being developed for destroying recovered chemical warfare munitions have come to the committee's attention, namely, the Japanese detonation of ammunition in vacuum integrated chamber (DAVINCH) technology and the Swedish Dynasafe technology. The committee considers these two technologies and the latest CDC technology as sufficiently capable and mature to warrant Tier 1 status for further consideration by the Non-Stockpile Chemical Materiel Project (NSCMP) as an alternative to the explosive destruction system (EDS) currently used by NSCMP, or as a complementary means of processing recovered non-stockpile munitions.

MEASUREMENT OF PERFORMANCE FOR DETONATION TECHNOLOGIES

A discussion of the Tier 1 detonation-type technologies will be informed by first considering appropriate means for gauging their performance. A measure of performance for detonation processes would be useful to the U.S. Army because it would allow comparing the relative effectiveness of different technologies. Also, although the level of performance and the precise test used to measure such performance is ultimately a decision for federal and state regulators, any information the U.S. Army might obtain or generate on the performance of these technologies would certainly be helpful in obtaining regulatory approvals to deploy such technologies. Moreover, the process of developing a detailed test procedure could form the basis for reaching a consensus with regulators. Furthermore, many members of the public interested in the destruction of CWM distinguish between destruction efficiency (DE) and destruction and removal efficiency (DRE).[2] Thus, an accepted measure of performance for detonation technologies will assist the Army in addressing questions from the public (see also discussion of public involvement in Chapter 2 and DREs in Chapter 3).

However, determining such a measure of performance for detonation processes appears to offer unusual challenges, and, based on the information available to the committee, the committee believes the Army should specify requisite documentation from vendors and employ engineering contractors to review it to determine if the data provide a consistent and reliable measure of performance. For other processes,

[1]See the National Research Council report *Systems and Technologies for the Treatment of Non-Stockpile Chemical Warfare Materiel* (2002).

[2]For a definition of destruction efficiency, see <http://www.basel.int/techmatters/popguid_may2004_uk_pros%20and%20cons.pdf>.

$$DE = 100 \times ((\text{input} - \text{output})/\text{input})$$

For destruction of a chemical weapon, input would be the quantity of agent in a munition and output would be the quantity of agent in all the final residual streams after the detonation process has destroyed that munition. For comparison, the definition of destruction and removal efficiency is

$$DRE = 100 \times [(\text{feed rate} - \text{emission rate})/(\text{feed rate})]$$

where emission rate is the rate at which the selected organic compound exits the process in the exhaust gas stream. The DRE thus focuses on air emissions while DE focuses on total destruction.

procedures have been established or are obvious and straightforward. Thus, the trial burn approach is well established for incinerators. A selected organic compound (which is more difficult to destroy than the typical waste burned in the incinerator during normal permitted operation) is fed at a known rate to the process. The mass of each effluent stream is measured, along with the concentration of the selected organic compound. The degree of destruction is then calculated. For incinerators, this is the DRE, which refers to "the percent of waste material that is either destroyed or otherwise removed from the waste feed" (ATSDR, 2005, p. 18).

In the equation DRE = 100 × [(feed rate − emission rate)/(feed rate)], the feed rate is the measured amount of chemical in the wastes fed to the incinerator and the emission rate is the measured amount of a chemical in the stack exhaust (ATSDR, 2005). The DRE measures the effectiveness of the treatment process as a whole.

For neutralization, hydrolysis, and many other processes that treat agent, the procedure is straightforward. Agent is fed at a known rate or in a known amount to the process. The mass of each effluent stream is measured, along with the concentration of the agent. Generally, there is no formal DRE that applies to neutralization and hydrolysis processes, although one can perform such a calculation.

Detonation processes destroy whole munitions, in discrete events. A procedure for determining the degree of destruction for a detonation process should ideally involve feeding complete munitions into the process; the feeding of neat agent in place of complete munitions would not give meaningful information.[3]

One possible approach involves determining the mass of the liquid in the munitions and the concentration of agent in the liquid, then measuring the mass and agent concentration in all the streams leaving the process. This approach could also involve measuring agent retained within the system, i.e., within the detonation chamber, but this could be difficult. Information thus obtained could then be used to calculate the DRE. The committee anticipates that the DRE will be a more important number than the DE. It would also be helpful to gather and report additional information gained from analysis of effluent streams, such as quantity of dioxins and furans produced, quantities of Schedule 2 compounds, and the proportions of the three valence states of arsenic. Comparison of these measurements with similar EDS performance measurements would also be important.

The DRE reflects how well the offgas management system is designed as well as how effectively the detonation destroys agent. Both are important. In evaluating detonation-type technologies, the degree of agent destruction in the actual detonation event should be measured. Of course, permits and regulatory approvals of such systems will typically entail process monitoring to ensure that they are operating as designed. Hence, in addition to being able to demonstrate an acceptable DRE, technologies must be able to demonstrate that agent is effectively destroyed and that secondary waste streams, including gases vented into the atmosphere, do not contain agent above agreed-on levels.

[3]As used here "complete munitions" means munitions containing either agent or a chemical surrogate that is more difficult to destroy than the chemical agent that is most resistant to destruction.

CONTROLLED DETONATION CHAMBER TECHNOLOGY

Description

The CDC, previously known as the Donovan blast chamber or the contained detonation chamber, was developed and is manufactured by DeMil International, Inc., of Huntsville, Alabama. The CDC was applied earlier to replace open detonation operations for destruction of conventional high-explosive munitions. It provides a contained environment that prevents the release of blast fragments, heavy metals, and energetic by-products. It was later proposed that a CDC could be used to destroy chemical warfare materiel (CWM) by detonation in its enclosed environment. The working assumption was that the heat and pressure of a contained explosion would destroy the chemical agent, especially in the wet environment produced by inclusion of water bags in the detonation chamber. Initial tests on World War I munitions recovered in Belgium indicated that a high level of agent destruction could be achieved. The preliminary results were reviewed in an NRC report (NRC, 2002).

Following the encouraging results of the Belgian tests, the U.S. Army has supported further testing in cooperation with the British Defence Science and Technology Laboratory at Porton Down, England. This further testing involved extensive modification of the basic Donovan blast chamber system to make it suitable for destruction of chemical munitions in an U.S. regulatory context. The Belgian tests were performed with a relatively small T-10 unit that had undergone only modest modifications to make it suitable for destroying toxic chemicals. The systems that have evolved from the Porton Down tests are much larger (requiring two 40-foot trailers for transport of the TC-25 or eight for the TC-60 vs. one for the T-10). The larger systems can process larger weapons, and most of the manual handling of munitions has been eliminated (Bixler, 2005).

Description of Original Test Unit

As tested in Belgium, the CDC consisted of three main components: the detonation chamber, an expansion chamber, and an emissions control unit, the latter comprising a particle filter and a bank of activated carbon adsorption beds (NRC, 2002). The maximum explosive rating of the T-10 mobile unit is 12 pounds of TNT-equivalent, including the donor charge used to access the burster and the agent.

The detonation chamber is connected to a larger expansion chamber. A projectile wrapped in explosive is mounted in the

detonation chamber. The floor of the chamber is covered with pea gravel, which absorbs some of the blast energy. The gravel is renewed periodically because it fractures during the explosions. Bags containing water are suspended near the projectile to help absorb blast energy and to produce steam, which reacts with agent vapors. After the detonation chamber is loaded, its entry port is sealed and the exit from the expansion chamber is closed. After the explosive is detonated, the chambers are kept sealed for about 2 minutes to maintain heat and pressure. The gases are then vented through the main duct to the baghouse and the carbon adsorption beds. Gases are monitored at several points in the CDC system for agent, carbon monoxide, and volatile organics as well as for agent at the exit duct outlet. The concentrations of particulates suspended in the vapors, such as soot, gravel dust, and metal oxides, were also monitored during the Phase 1 tests (De Bisschop and Blades, 2002). Water vapor from the explosives and from the explosion-quenching water bags collects on the charcoal filters.[4]

After the detonation, the atmosphere in the detonation chamber clears fairly rapidly as air is drawn through the system to remove residual organic vapors, thereby permitting reentry for placement of the next round. During the tests in Belgium, 15 chemical munitions were treated in the CDC in 3 hours, including 20-minute breaks after every five munitions (U.S. Army, 2001). This amounted to an average treatment time of 12 minutes per munition, including the time for breaks. Analysis of the pea gravel and of wipe samples from the chamber walls showed low agent concentrations (1.2 to 64.4 mg/kg in pea gravel; 0.39 to 78.65 mg/m^2 in wipe samples from detonation chamber) during the Belgian test series (De Bisschop and Blades, 2002).

The main waste materials from destroying chemical munitions were solids: soot, charcoal (from the filters), pea gravel, inorganic dust, and metal fragments from the weapons. The major liquid waste from the CDC was spent hypochlorite solution from decontamination of the system prior to maintenance operations.[5] The solids, which may have been contaminated with traces of chemical agent and explosives residues, were packaged in plastic bags and placed in shipping containers that were sent to a commercial hazardous waste incinerator for disposal.

Current TC-25 and TC-60 Chemical Munitions Destruction Units

The CDC T-10 model tested in Belgium can treat complete chemical munitions up to 105-mm in diameter. A larger mobile unit (TC-25) was tested extensively at Porton Down, England (Blades et al., 2004) (see Figure 4-1). A still larger unit (TC-60) with an explosive capacity of 60 pounds of TNT-equivalent is now available (Bixler, 2005). It can handle munitions over 200 mm in diameter, according to the manufacturer. Table 4-1 provides the dimensions of the pressure chambers for the three CDC models.

The latest versions incorporate a mechanical system to move explosive-encased munitions from the preparation area through a reduced pressure vestibule into the detonation chamber. Double doors on the detonation chamber minimize any chance that agent vapors or detonation debris might escape. For standard varieties of munitions, the explosive charge is precast in a plastic form that can be slipped over the projectile. This packaging mode minimizes worker contact with the munitions and facilitates the mechanical transport of the projectile into the detonation chamber. Nonstandard items may require wrapping the munitions in sheet explosive, as was done in Belgium.

In the detonation chamber itself, armor plate can be affixed to the walls to reduce the likelihood of damage by flying metal fragments. The experience to date suggests that the chamber will retain full integrity for thousands of shots. Predicted lifetime is greater than 200,000 shots (Bixler, 2005). Injection of hot air or gaseous oxygen into the detonation and expansion chambers facilitates decomposition of any chemical agent adhering to the walls or adsorbed on the pea gravel or other solids.

A significant change in operating procedure from that used in the Belgian tests is applied in decontaminating the chambers in preparation for maintenance. In the early tests, the walls of the chambers and the pea gravel were washed with sodium hypochlorite (bleach) solution to oxidize any residual chemical agent. This procedure was effective but required much manual effort and resulted in a liquid waste that required separate disposal. In the revised procedure, the chambers are flushed with hot (450°F) air for up to 24 hours to destroy residual agent. An alternative procedure is to detonate a small explosive charge that destroys the residual agent thermally. Both procedures reduce worker exposure and eliminate the generation of a liquid waste stream (Bixler, 2005).

The back end of the system, into which the offgases from the expansion chamber vent, has also been modified extensively (Blades et al., 2004). The vapors and particulates arising from the detonation of the munition pass through a reactive-bed filter (hydrated lime or sodium bicarbonate) to remove acidic gases and a porous ceramic filter to collect particulates, including soot and dust from the pea gravel. A lime precoating on the ceramic scavenges acidic vapors

[4]The committee noted that water vapor competes with organic species for sites on the charcoal filters. Saturation of these sites with water vapor could reduce the effectiveness of the filters in removing organic species from the emission stream (NRC, 2002). In the current system, agent monitoring between the two series-mounted carbon filter beds can detect overloading of the first filter bed before any possible breakthrough from the overall system.

[5]Personal communications between Herbert C. De Bisschop, Belgian Military Academy, and George W. Parshall, July 25, 2001.

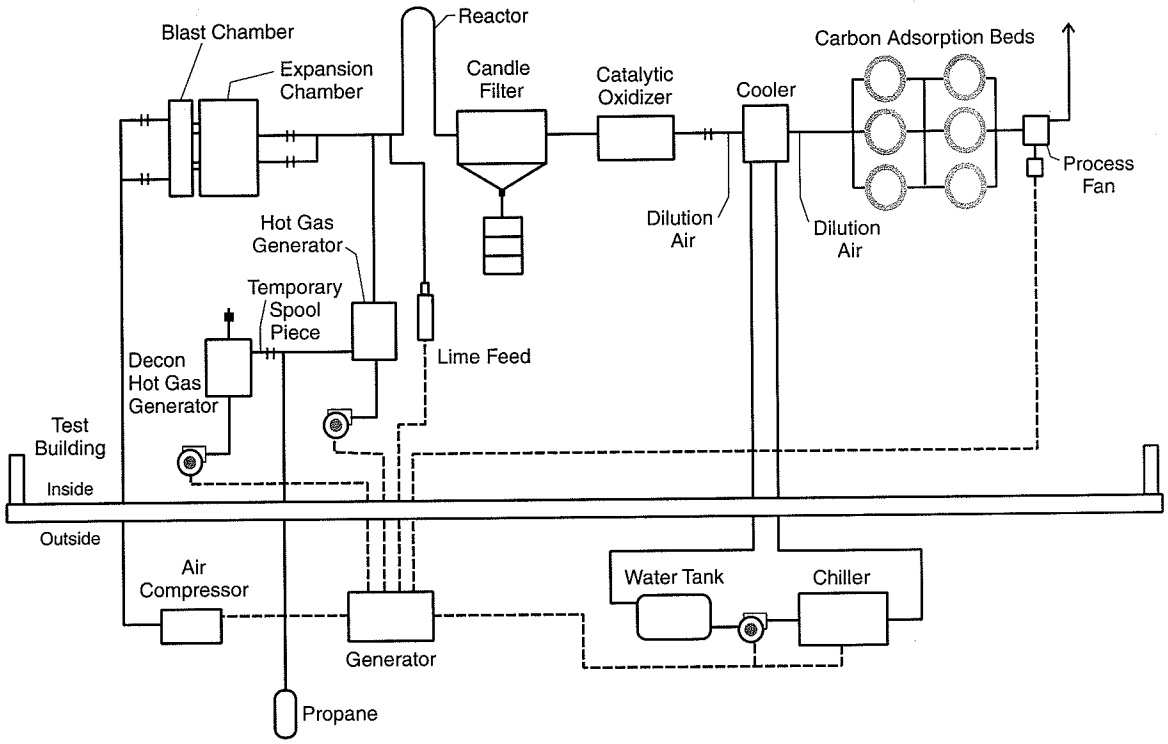

FIGURE 4-1 TC-25 CDC system layout. SOURCE: Blades et al., 2004.

TABLE 4-1 Dimensions of the Pressure Chambers in Three CDC Models Designed for Destroying Chemical Warfare Agents

	Detonation Chamber		Expansion Tank		
CDC Model	Interior (m)	Volume (m^3)	Interior (m)	Volume (m^3)	Total Volume (m^3)
T-10	1.524 × 1.524 × 1.524	3.5	2 × 2 × 2.3	9.2	12.7
TC-25	1.981 × 2.286 × 2.845	12.9	2.438 × 2.438 × 10.515	62.5	75.4
TC-60 PD	2.438 × 2.438 × 3.657	21.5	2.286 dia × 10.516[a]	43.1	64.6

[a]The expansion tank for Model TC-60 PD is cylindrical.

SOURCE: Briefing by CH2MHILL to Thales and the Délegation Générale pour l'Armament, October 2005.

that escape the reactive filter. A catalytic oxidation unit (CATOX)[6] oxidizes carbon monoxide and organic vapors from the gas stream prior to venting through a two-stage carbon adsorption bed system. MINICAMS[7] monitoring of the gas stream indicates that no detectable agent reaches the adsorption bed.[8]

[6]A CATOX unit facilitates the oxidation of carbon monoxide, hydrogen, and volatile organic compounds contained in an air stream such as that emerging from the particle filter in the pollution control system of the CDC. Generally, the air stream is passed through a bed of a catalytic solid that acts very much like that in an automotive catalytic converter.

[7]A MINICAMS is an automatic, near-real-time continuous air monitoring system using gas chromatography and sample collection with a solid-adsorbent preconcentrator or fixed-volume sample loop. The MINICAMS collects an air sample, performs an analysis, and reports the result. Reported agent concentrations above a user-set threshold generate an alarm status, which can be reported in various ways (see <http://www.oico.com/default.aspx?id=product&productID=75>).

[8]Controlled detonation chamber (CDC) update. Briefing by DeMil International to the Non-Stockpile Program Core Users Group, November 2004.

Country-by-Country Experience

Belgium is the only nation in which the CDC has been used in a production mode for destroying chemical weapons. Although tests were carried out with a variety of World War I chemical agents and munitions, the CDC has been used primarily to destroy German 77-mm artillery projectiles containing Clark II (diphenylcyanoarsine) agent, an arsenical irritant. The system has been generally satisfactory, and over 2,000 such projectiles have been destroyed in 5 years.

The United States and the United Kingdom have collaborated on a series of tests that demonstrated the ability of a transportable CDC to safely destroy other chemical munitions that may be found at sites in the United States and the United Kingdom (Blades et al., 2004). Many improvements have been made to the CDC system to reduce manual operations, to simplify waste disposal, and to ensure that chemical agent vapors do not escape into the environment. Pending successful completion of a test series under way in early 2006, the system should be ready for implementation if it proves cost effective and publicly acceptable.

Evaluation Factors Analysis for CDC

Process Maturity

The use of the CDC to destroy chemical munitions has been demonstrated in a series of campaigns over a 5-year period. As mentioned above, the first tests were carried out in Belgium in May and June 2001. During those tests, live munitions containing sulfur mustard agent, Clark arsenical agent, and phosgene were destroyed. The original Donovan CDC system and the operating procedure were modified to enhance worker safety and reduce potential emissions of residual chemical agent or agent decomposition products. Extensive monitoring was conducted to determine agent DE and establish the quantity and nature of the decomposition products (De Bisschop and Blades, 2002).

Subsequently, the Belgian military used the TC-60 CDC in a production mode to destroy part of its large stockpile of recovered chemical warfare materiel (RCWM) at Poelkapelle. Over 2,000 German 77-mm projectiles containing Clark arsenical agents were destroyed in the T-60 unit (Bixler, 2005).

Following the success of the Belgian testing, the U.S. Army supported a series of tests at Porton Down in the United Kingdom to demonstrate the usefulness of the CDC for operations in the United States. These tests included modifications of the system to enhance DE, to improve worker safety, to improve productivity, and to minimize any possibility for escape of agent vapors.

Phase I testing was carried out from April to September 2003 (Blades et al., 2004). A variety of munition types containing sulfur mustard agent, phosgene, a phosgene-chloropicrin mixture, and a smoke composition were destroyed.

Phase II demonstration/validation testing was conducted at Porton Down in 2004 (Bixler, 2005). The tests included detonation of two munitions per shot, a key point in establishing the potential throughput of the CDC. Extensive computer control and safety interlocks were added to regulate contact of any agent vapors with the treatment system and to remove any opportunity for a detonation to occur before the complete system is ready for operations.

Another series of tests at Porton Down was scheduled for early 2006. A major goal of these demonstrations was to demonstrate the potential throughput of the TC-60 CDC. Modeling indicates that 22 shots (up to 40 munitions)[9] can be conducted in a 10-hour shift (DeMil International, 2005a).

Process Efficacy/Throughput

The CDC appears to be well suited for destroying a range of either chemical or conventional munitions (NRC, 2002). While it has yet to be tested for the destruction of nerve agents (cf. Table B-2), the hot, wet, oxidizing atmosphere in its detonation chamber can reasonably be expected to decompose these compounds rapidly. The CDC has also not been demonstrated for munitions encased in overpacks for storage.

The DE achieved by the detonation alone appeared to be above 99 percent, as measured by the postdetonation environment in the Belgian tests (De Bisschop and Blades, 2002). A similar analysis done in the U.S. Army/U.K. Defence Science and Technology Laboratory tests gave a DE from detonation of 99.408 to 99.998 percent in a series of five tests with HD-loaded 4.2-inch mortars. In five tests in which agent destruction was enhanced by the addition of gaseous oxygen to the detonation chamber prior to the blast, the DEs from detonation ranged from 99.965 to 99.996 percent.[10] These calculated efficiencies were based on measurement of residual agent in the pea gravel and the walls of the detonation chamber. No residual agent was found downstream in the expansion chamber or the pollution control system.

The more important measure from the viewpoint of preventing releases that might endanger workers, the public, or the environment is the DRE. No published DRE figure has been found, but it is likely to be as least 99.9999 percent ("six nines") because the posttreatments reduce agent concentrations to below detectable levels as measured by a MINICAMS before the offgases reach the carbon adsorption beds (Bixler, 2005).[11] It does not, however, qualify as a hold-and-test system like the EDS.

---

[9]Multiple 75-mm projectiles or 4.2-in. mortars can be treated in a single detonation operation.

[10]Brint Bixler, CH2MHILL, responses to committee questions of February 6, 2006.

[11]Although the reference does not provide a method detection limit for the MINICAMS as used in this situation, the MINICAMS can generally detect HD at levels of 0.001 mg/m^3 and sometimes lower (NRC, 2005).

TABLE 4-2 Estimated Throughput Rates for CDC TC-60

Munition	Munitions per Cycle	Cycles per 10-hr Day	Munitions per 10-hr Day
4.2-in. mortar, M1	2	20	40
75-mm projectile, M64	2	20	40
5-in. projectile, MK VI	1	22	22
5-in. projectile, MK 54	1	22	22
155-mm projectile, MK II	1	22	22
8-in. projectile, T174	1	22	22
Bomblet, M139	3	20	60
105-mm projectile, M60	1	22	22
100-lb bomb, M47	—	30	6[a]
115-lb bomb, M70	—	30	5[b]

[a]Agent drained into five 20-lb lots; each lot detonated in CDC. Five 20-lb lots/bomb × 6 bombs/day = 30 cycles/day.
[b]Agent drained into six 20-lb lots; each lot detonated in CDC. Six 20-lb lots/bomb × 5 bombs/day = 30 cycles/day.

SOURCE: CH2MHILL, responses to committee questions of February 6, 2006.

Models of the CDC up to the TC-60 are designed to be transportable although there may be some restrictions on road transport because of the physical size of the detonation chamber. These models are designed to be set up within 5 days. The typical operating crew comprises 18 staff, including laboratory, safety and supervisory personnel (DeMil International, 2005b).

Because there is no time-consuming neutralization step, the CDC's throughput could be much higher than that of the EDS, which conducts only one detonation every other day. However, the comparison is complicated by the fact that the EDS can destroy more than one munition per shot, depending on the size of the munitions. The EDS-1 can handle three mortar rounds, and the EDS-2 has destroyed as many as six per shot. As noted above, the CDC has demonstrated destruction of two munitions per shot and could potentially destroy 40 projectiles per 10-hour shift. Estimated throughput rates per 10-hour day for representative U.S. munitions are shown in Table 4-2. The current CDC also has the advantage in operation of generating little or no liquid waste that requires subsequent processing, in contrast with the substantial neutralent and rinsate effluents produced with the EDS.

Process Safety

The continuing development of the CDC has significantly reduced the manual operations in the treatment of CWM. The original T-10 system tested in Belgium involved personal protective equipment (PPE)-clad workers in operations such as wrapping projectiles in sheet explosive, moving the projectile into the detonation chamber, and connecting fuzes and detonators. After detonation and cooling of the chamber, the workers had to prepare the chamber for reloading despite the presence of traces of agent on the chamber walls and the pea gravel. Preparation for weekly maintenance operations included washing the walls and floor of the chamber with decontamination solution. Workers also packed agent-contaminated filter material for shipment to a TSDF (De Bisschop and Blades, 2002).

The modifications applied during the Porton Down tests reduced manual operations by slipping precast donor explosives over the projectile and mechanically moving the round into the detonation chamber. Even in the advanced TC-60 system, however, there remains a manual step. Between shots, an operator must reach inside the door to the detonation chamber to unplug the electrical connector for the detonator from the last detonation, then plug in the connector for the next detonation. This approach might slightly increase the potential for worker exposure, but it eliminates the chance of mechanical failure of an automated plug connection system.

Routine munition preparation operations are conducted by workers in Level C PPE. Level B PPE, offering a higher level of protection than Level C, is used for maintenance work in and around the chambers (Blades et al., 2004). A process hazards analysis for the current TC-60 model was conducted in mid-2005 (DeMil International, 2004). According to the technology proponent, it was a "qualitative analysis prepared in accordance with U.S. Army's AR 385-64 and AR 385-61 directives, and Guidelines for Hazard Evaluation Procedures. . . ."[12] The analysis covered an extensive range of operations, failure modes, and corrective actions and provided qualitative severity assessments of failure modes. Supporting systems such as that which supplies oxygen to the detonation chamber were included in the evaluations and process modifications. It was reported by the technology vendor that this process hazards analysis had been reviewed

[12]Brint Bixler, CH2MHILL, responses to committee questions of February 6, 2006.

and agreed with by the U.S. Army's Edgewood Chemical Biological Center.[13]

The substitution of hot air purging for washing the chamber and detonation debris with decontamination solution removed a set of operations that probably constituted a significant risk of agent exposure. The improvements to the pollution control system seem to have minimized agent-contaminated waste materials (Bixler, 2005).

Public and Regulatory Acceptability in a U.S. Context

The CDC has not been permitted for use in destroying CWM in the United States, although it has been used successfully in Europe. Additional testing of the CDC may be required if the system is to be permitted in the United States for treatment of CWM. The system's DE from detonation of 99 to 99.99 percent is modest; the DRE of the entire system, including thermal decontamination and offgas treatment, would be much higher. In extensive testing at Porton Down, agent vapors were never detected at the entrance to the carbon adsorption bed, let alone the exit (DiBerardo, 2004). Evidently, the offgas cleanup prior to the adsorption beds was effective, and a DRE of at least 99.9999 percent may be assumed.

Unlike the EDS and the DAVINCH, the CDC does not have provisions for holding, testing, and retreating detonation debris before opening the detonation chamber, a feature that many public stakeholders desire.

Public concerns in the United States about using the CDC to treat chemical munitions are not known at this time. However, the extensive U.S. use of the CDC for destruction of conventional munitions, including at the Naval Surface Warfare Center (Bixler, 2005), the Massachusetts Military Reservation, and the Blue Grass Chemical Depot, may contribute to public acceptance. The operations at Blue Grass were conducted under a RCRA permit.[14] The experience with conventional munitions seems to demonstrate that the CDC can be operated without noise or vibration problems for its neighbors.

Secondary Waste Issues

Since the introduction of hot air purging for the CDC system, the secondary waste concerns regarding CDC operations have been substantially reduced. The primary wastes are solids:

- Munition fragments,
- Pea gravel and dust,
- Lime from the reactive bed filter, and
- Carbon from adsorption units.

It was reported that the hot air purging (450°F for 24 hours) yields solids in a condition suitable for transport under government control (Blades et al., 2004). Some post-treatment, such as smelting for metal scrap or incineration for carbon, may be required if the solids are not to be disposed in a hazardous waste landfill.

Process Cost Issues

No quantitative cost information was available to the committee, but some qualitative factors indicate that the CDC technology may be cost effective for some non-stockpile applications. Chief among these factors is the use of the CDC for RCWM destruction operations in Belgium over a period of almost 5 years, including an upgrade in technology from a prototype version of the T-10 model to the more sophisticated TC-60 model.

Similarly, extensive U.S. experience with destruction of conventional and agent-like munitions (smokes, white phosphorus, CS agent) indicates that the basic CDC technology is cost effective for destroying projectiles and other types of explosive-containing munitions in a U.S. context.

Perhaps the most appropriate technology against which to compare cost effectiveness in non-stockpile applications is the EDS-2, which, like the CDC, performs the complete sequence of accessing the chemical agent, destroying the agent, and yielding solid debris that may be disposed of by a TSDF. For small caches of RCWM (one or two munitions), a comparison between the EDS and the T-10 model of the CDC may be appropriate because they appear to be comparable in complexity and mobility. A detailed analysis of costs, including those of waste disposal, would be necessary to see if the CDC offers any advantages over the EDS for sites involving "small finds," i.e., limited numbers of items.

For large caches of RCWM such as may be found at old burial sites, the presumed greater productivity (munitions per week) of the larger CDC systems would seem to offer a cost advantage over the EDS-2. Again, a detailed analysis based on productivity demonstrated in the 2006 Porton Down tests would be required to establish the presumed cost advantage. In this type of operation, the CDC should also be compared to transportable versions of the DAVINCH and Dynasafe systems.

Summary

The CDC system is relatively mature, having been used in a production mode for destroying RCWM in Belgium for more than 4 years in addition to also having been used extensively in the United States for destroying conventional munitions. Modifications made during testing at Porton Down have minimized manual operations and have almost

[13]Brint Bixler, CH2MHILL, responses to committee questions of February 6, 2006.

[14]Meeting between Brint Bixler and John Coffey, CH2MHILL, and committee representatives, Keck Center of the National Academies, Washington, D.C., January 30, 2006.

entirely eliminated the production of liquid wastes. Agent emissions during normal operations appear to have been completely eliminated.

The basic design and operating principles of the CDC are simple. Munitions are encased in explosive and loaded into a large, almost cubical, double-walled steel chamber along with bags of water for thermal control and steam generation. The system is sealed and the explosive is detonated. This explosion breaks open the munition, detonates any energetics contained therein, and releases the chemical agent. The heat, oxygen, and steam in the detonation and expansion chambers destroy over 99.99 percent of the chemical agent. Starting immediately after detonation and proceeding over a 10-15 minute period, the offgases are released to the pollution control system, where they are filtered, the acidity is neutralized, and organic matter is oxidized catalytically. These steps reduce the agent concentration below detection limits before the gases are vented through a bank of carbon adsorption beds. The internals of the destruction systems are decontaminated with hot air, which also decontaminates the residual solids such as munition fragments.

The CDC is safe, reliable, and effective. It is made in three transportable versions that are appropriate for destroying small, medium, and large numbers of munitions. In addition, there is a large fixed model that could be used at a large burial site or firing range.

The smallest mobile CDC model (T-10) seems generally comparable to the EDS-2 in size and complexity. The T-10 has an advantage relative to the EDS in that it produces little or no liquid waste, but it lacks the hold-test-release capability of the EDS for assuring that offgases are devoid of agent emissions. A detailed cost calculation would be required to determine the cost effectiveness of the CDC T-10 vs. the EDS-2 for disposing of small RCWM caches (ones or twos). The presumed greater productivity of the larger CDC models (TC-25 and TC-60) might make them more cost effective for destroying large quantities of RCWM.

The CDC might gain public and regulatory acceptance in the United States without excessive difficulty on the basis of extensive prior operating experience and testing, but some community members may view the lack of a hold-test-release capability as a disadvantage. The committee does not believe that this lack is a significant technical issue, given the batch nature of the process and the proven effectiveness of the offgas treatment system. Still, it believes that this is one of the many factors that must be considered when comparing the CDC with other detonation technologies.

DETONATION OF AMMUNITION IN VACUUM INTEGRATED CHAMBER

Description

DAVINCH is a trademarked acronym for the detonation of ammunition in a vacuum integrated chamber and is a controlled detonation system for the disposal of chemical munitions.[15] DAVINCH technology was developed by the Japanese company Kobe Steel, a manufacturer of large steel pressure vessels. Munitions placed in the DAVINCH vessel are detonated in a near vacuum using a slurry explosive to open the munitions and access the chemical agent. The agent is destroyed as a result of the high temperature (3000K) and pressure (10 gigapascals) generated by the shock wave, followed by high-speed cavitation and then a fireball. DAVINCH is a dry process in that no post-detonation reagent is used because the agent is destroyed in the vessel (see Figure 4-2).

DAVINCH technology is a successor to an explosion containment vessel (DV10) that was used in 2000 at Lake Kussharo on Hokkaido Island in Japan to explosively access 26 World War II bombs containing a mixture of mustard agent and lewisite (Yellow bombs). Holes were drilled in the bombs and the agent was drained and neutralized. The drained bombs, containing explosives, were placed in the DV10 and destroyed using slurry explosives. A successor vessel was developed that was able to both access the agent and destroy it, as noted above. This vessel, the DV45, has been used at Kanda Port in Kyushu Island, Japan, to destroy recovered Yellow bombs and recovered Red bombs containing Clark I and Clark II vomiting agents (DC/DA) (see Figure 4-3). Between October 2004 and May 2005, 100 Yellow bombs weighing 50 kg each and 500 Red bombs weighing 15 kg each were destroyed in the DV45. The experience in using DAVINCH at Kanda Port is described in Lefebvre et al. (2005a), Asahina et al. (2005), and Asahina (2005). A detailed description of the DAVINCH, its design basis, its structural and operational characteristics, and the testing conducted to date are found in Lefebvre et al. (2005b).[16]

The DAVINCH is a double-walled steel chamber. The replaceable inner vessel is made of armor steel and the outer vessel is made of multilayered carbon steel plates with a corrosion- and stress-crack-resistant inner plate made of, for example, stainless steel, Hastalloy, or a similar material. The chambers are separated by air. Owing to its double-wall design and the materials of construction, the DAVINCH has the ability to confine high-pressure detonation gases, eliminating the need for an expansion tank to contain them following a detonation.

The DV45 weighs about 75 tons and has an explosive containment capacity of 45 kg TNT-equivalent. Its inner vessel has an inside diameter of 2.6 meters and an inner length of 3.5 meters. In contrast, the U.S. EDS-2 has a diameter of 0.74 meters and a length of 1.42 meters. A larger version

[15]Except where otherwise noted, the majority of the technical information in this section came from various meetings with representatives of Kobe Steel (Japan) (see Appendix D).

[16]Joseph Asahina, Kobe Steel, "DAVINCH: Detonation of ammunition in vacuum integrated chamber," presentation to representatives of the committee on November 11, 2005.

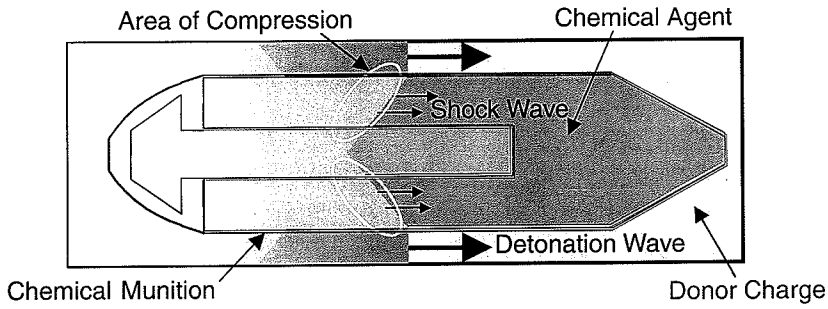

	Chemical Agent Destruction Mechanism
1st step	**Instant compression by propagating shock wave pressure of 10 GPa** (similar phenomenon is observed in cavitation bubbles when bubbles collapse → sonochemistry)
2nd step	**High-speed mixing of chemical agent with detonation gas at high pressure and high temperature**
3rd step	**Thermal decomposition by the long-lasting fireball of 2000°C for 0.5 sec.**

FIGURE 4-2 DAVINCH three-stage destruction mechanism. SOURCE: Joseph Asahina, Kobe Steel, December 8, 2005.

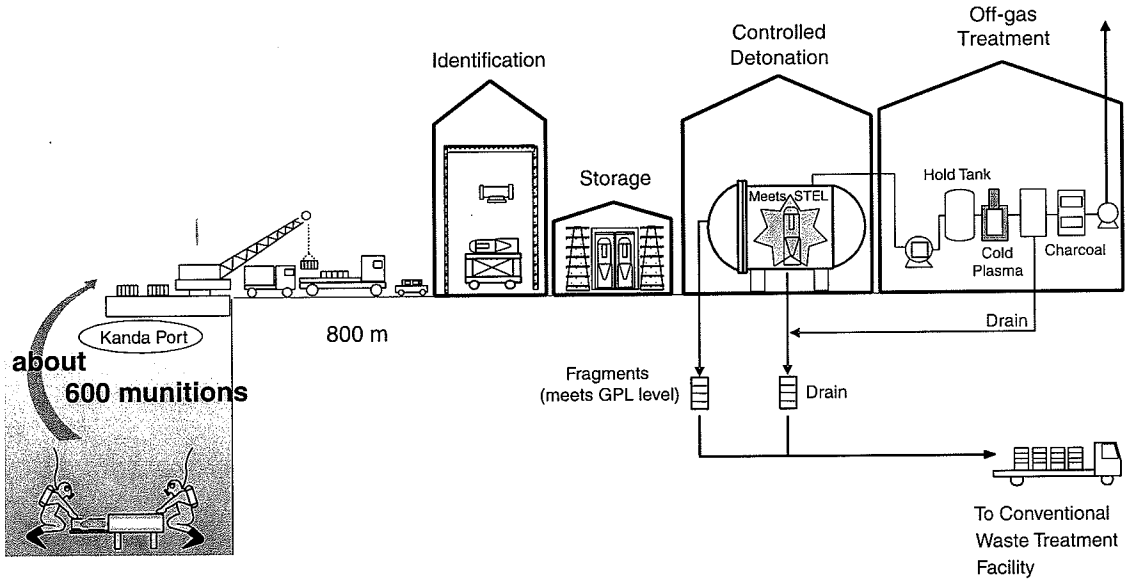

FIGURE 4-3 Outline of the Kanda project. SOURCE: Joseph Asahina, Kobe Steel, December 8, 2005.

of DAVINCH, the DV65, has been fabricated and is available. It has the same diameter as the DV45 but is longer and has an explosion containment capacity of 65 kg TNT-equivalent.

Munitions to be destroyed in a DAVINCH vessel are placed in a box—one munition per box with spacers at each corner to provide room for injecting an emulsive explosive around the munition. The explosive is extruded into the gap between the munition and the inner wall of the box either manually or automatically. The emulsion explosive can also be injected into the overpacks of leaking munitions or, if there is a filler between the overpack and the munition, the explosive can be placed outside the overpack. In this case, additional donor explosive is added to ensure that the explosive in the munition burster is sympathetically detonated by the blast.

A detonator is inserted into the slurry explosive that surrounds the munition and the top of the box and a lifting sling is attached. The munition in its box, with the detonator and detonation wire attached, is lifted by the sling and carried into the vessel by a robotic arm mounted on an operation deck that does not touch the inner walls of the vessel. The robotic arm hangs the sling from a hook on a linear rack at the top of the vessel and then connects the firing wire to a plug-in fixture mounted inside the vessel door. The prongs at the end of the detonation wire are inserted by the robotic arm into a sealed, gas-tight port in the side of the vessel.

The boxed munitions are positioned along the long axis of the vessel a specific distance apart depending on their configuration and contents. The DAVINCH contains an air-tight, circular, double-flanged door that is remotely opened and closed. The door is not hinged but moves laterally until it is aligned with the vessel. It is then moved toward the vessel until contact is established and then secured in place. Following a detonation, the door's flanges and gasket can be cleaned using the same robotic arm that moves munitions into the inner vessel.

After the door is sealed, air is evacuated from the inner vessel using a vacuum pump. This process takes about 10 minutes. The resulting vacuum reduces noise, vibration, and blast pressure, thus increasing the vessel life. The munitions are then detonated under near-vacuum conditions (about 0.2 psi). Using an electric delay detonator, the munitions are sequentially detonated such that the second munition is detonated before the shock wave from detonation of the first munition reaches it. The detonations are sequential to reduce the maximum pressure on the inner vessel walls. If more than two munitions are to be sequentially detonated (three have been sequentially detonated in the DV65), the length of the inner vessel can be increased, holding the vessel diameter constant. The munitions are imploded, reducing noise, vibration, fragment velocity, and gouging/scoring of the walls of the inner vessel. By detonating in a near vacuum, the volume of offgas to be treated is also reduced, since following a detonation, the vessel is repressurized to 1 atmosphere and the volume of offgas that is pumped out is the volume of the DAVINCH inner vessel. As a result, an expansion tank is not needed.

The initial shock wave from the detonation of explosives increases the pressure in the inner vessel to up to thousands of atmospheres (10 gigapascals) in 0.3 milliseconds. As illustrated in Figure 4-2, agent is destroyed as a result of a three-sequential-step process:

1. Destruction by a propagating detonation shock wave that compresses the agent.
2. Destruction due to high-temperature and high-pressure detonation gases.
3. Thermal destruction resulting from a 2000°C fireball in the vessel. A proprietary additive increases the time duration of the fireball to 0.5 seconds to ensure agent destruction.

Following the detonation, air is introduced into the inner vessel, with atmospheric pressure reached after about 1 minute. Using the vacuum pump, the internal pressure in the vessel is again reduced to a near vacuum in order to remove the offgases resulting from the detonation of munitions and destruction of agent and energetics. If agent is detected in the offgas, the capability exists to recycle the gas back into the vessel.

Several methods are available to cleanse the DAVINCH vessels. An electrostatically charged decontamination aerosol can be sprayed in the inner vessel and in the gap between the inner and outer vessel in the event that any residual agent is detected. This is done prior to removing the replaceable inner vessel. A water jet spray is available to rinse out this decontamination solution. Finally, following the evacuation of the offgas from the inner vessel, the DAVINCH door can be opened and an explosive cleansing shot can be placed inside. The door is closed and the explosive charge detonated in the empty inner vessel to destroy any residual agent by means of the shock wave and heat from the detonation of the explosive.

Munition fragments are left in the inner vessel and are removed by the robotic arm after a period of time, about once per week. As a result of the heat generated by the fireball, the metal fragments are decontaminated to a point such that they are releasable to the public—that is, they do not exceed the Centers for Disease Control's recommended general population limit (GPL) value for the agents destroyed (for mustard agent, this value is 10^{-6} mg/m^3).

Following the detonation, offgases are cleaned, filtered, and stored in a buffer tank. They are then pumped into a combustion chamber and heated. The combustion gases are quenched and passed through an activated carbon adsorption bed before being released to the atmosphere. An alternative to combustion that is under consideration involves sending the filtered offgas to a small, cold plasma arc unit to treat the gas prior to its release.

TABLE 4-3 DAVINCH Experience in Destroying Japanese WW II-Era Bombs Containing Lewisite, Mustard Agent, and Agents Clark I and Clark II (Vomiting Agents)

Type of Bomb	Length[a] (cm)	Width (cm)	Weight (kg)	Quantity of Explosives (kg)	Quantity of Agent (kg)
Yellow	70	20	50	2.3[b]	18.9
Red	50	10	15	1.3[c]	0.37

[a]Without tail fins.
[b]Picric acid.
[c]TNT-15% naphthalene.

SOURCE: Asahina et al., 2005.

Since the agent in the Yellow bombs destroyed by DAVINCH is a 50:50 mix of lewisite and mustard agent, arsenic removal is part of the process. Eighty percent of the arsenic is metallic and can be recovered without further treatment. The remaining 20 percent consists of arsenic oxides and requires further treatment. The arsenic and arsenic oxides recovered from the DAVINCH process are sent to a contractor for such treatment.

When destroying two Yellow bombs per shot, DAVINCH DV45 has had a throughput rate of three shots per 8-hour day or about 2.5 hours per cycle, including preparation of the munitions, loading the inner vessel, sealing the door, drawing a vacuum, the detonation itself, evacuating the offgases, vessel decontamination if needed, and opening the vessel door to prepare for the next cycle. The DV65 has processed up to three Yellow bombs per shot, or nine bombs per 8-hour day. Under automatic operation, the throughput is estimated to be five shots per 8-hour day according to the manufacturer, but this has yet to be demonstrated.

Country-by-Country Experience

The DAVINCH DV45 unit has been used in Japan, at Kanda Port, to dispose of 600 World War II chemical bombs, some containing a lewisite/mustard agent mix and others containing vomiting agents (Lefebvre et al., 2005a; Asahina et al., 2005; Asahina, 2005). This is the only use of DAVINCH technology to date. It is expected that this DAVINCH unit will be used again at Kanda Port to dispose of bombs that remain underwater and that will be brought to the surface in sealed containers. It is also possible that DAVINCH technology will be used for applications in China, France, and Belgium in the future.

Evaluation Factors Analysis

Process Maturity

DAVINCH is a developed technology with experience in destroying Japanese World War II-era bombs containing lewisite, mustard agent, and agents Clark I and Clark II (vomiting agents). The characteristics of these bombs are given in Table 4-3.

Although DAVINCH technology has not been tested or used with U.S. non-stockpile munitions, the stated capabilities indicate it could process such munitions. For example, a representative large non-stockpile item, the 8-inch, T-174 projectile, has a length of 35.17 inches (89 cm), a width of 8 inches (20.3 cm), and weighs 200 pounds (91 kg)—somewhat longer and heavier than the Japanese Yellow bomb but still within the physical capability of a DAVINCH DV45. This projectile contains 6.95 pounds (3.15 kg) of Composition B explosive in its burster, a somewhat greater quantity than found in the Japanese Yellow bomb but still well within the 45 kg explosive containment capability of the DV45.

Although DAVINCH technology is used in Japan, it has not been permitted for use in the United States, but the manufacturer, through a U.S. corporate partner, is looking into permitting requirements and procedures. As of the close of information gathering for this report, Kobe Steel has not yet applied for a permit to test DAVINCH technology in the United States.

Process Efficacy/Throughput

DAVINCH technology appears to be well suited for destroying a variety of non-stockpile munitions and containers in the United States as well as for destroying both stockpile chemical munitions and conventional high-explosive rounds (although it has not been used to destroy munitions filled with nerve agents). It has the potential to destroy chemical weapons with different fills in a single shot as well as to destroy a combination of chemical and conventional munitions in a single shot, although this has yet to be demonstrated.

DAVINCH units exist that are considerably larger than the largest detonation vessel used by the U.S. Army's NSCMP, the EDS-2. The DAVINCH vessel used in Japan at Kanda Port, the DV45, has an inner diameter of 2.6 meters and an inner length of 3.5 meters. Comparable dimensions for the EDS-2 are 0.37 meters and 1.42 meters; consequently,

the internal volumes differ by a factor of about 30. Explosion containment capabilities are also substantially different: 45 kg (99 pounds) for the DV45 vs. 5 pounds for the EDS-2, a factor of about 20. The DAVINCH footprint, including the detonation vessel, gas treatment, lab space, and personnel support, is a rectangle having dimensions of about 80 meters by 60 meters, based on the Kanda Port experience.

DAVINCH units can be mounted on a flatbed trailer and made transportable; this is planned for use at various locations in China, where relatively small quantities of munitions have been found. At these locations, a transportable unit is more cost effective than construction of a fixed facility. Supporting infrastructure would also be transportable.

Kobe Steel has estimated the DRE for the detonation chamber at >99.9999 percent. However, the procedures were not consistent with U.S. regulatory requirements—that is, the methodology cannot be used to calculate the regulatory DRE. The committee believes, however, that the DAVINCH technology should be able to achieve a high DRE, considering that no agent has been detected downstream of the detonation chamber.

The gases resulting from detonation in the DAVINCH vessel are primarily H_2 and CO. These gases are pumped from the vessel and passed through a cyclone to remove particulates. They are then held in a storage tank for testing of the offgas content. In the event that 99.9999 percent DRE is not achieved, the offgas can be returned to the DAVINCH vessel for further treatment via a cleansing shot in which another detonation takes place. Rather than being returned to the vessel, the offgas can also be sent to an adjacent combustor and passed through a two-bed charcoal filter before being released to the atmosphere.

As an alternative to offgas combustion, the DAVINCH manufacturer is considering use of a small cold plasma unit to treat the detonation offgas. The cold plasma unit is about 1.5 meters high and has the appearance of a home hot water heater—basically a vertical cylinder. The unit operates at a temperature of 900°C and processes about 1 m^3 of offgas per minute, based on the 20 m^3 offgas volume resulting from a shot in the DV45 and a 20-minute processing time to pass the gas through the cold plasma unit. It operates under a slightly negative pressure, and an oxygen supply is provided to aid in the destruction of the offgas constituents. Although intended to be a gas treatment unit, the cold plasma also is claimed to remove 99.9 percent of any agent that may remain in the offgas. This unit can be plugged into a standard 220-volt wall outlet.

With the cold plasma unit as an alternative for offgas processing, a proposed modification to the process flow would place the plasma unit before the offgas storage tank. The treated offgas can still be held in the tank and tested for its constituents. If any agent is detected, the treated offgas can be returned to the DAVINCH vessel for further treatment via the cleansing shot or can be recirculated through the vessel and returned to the cold plasma unit for further treatment in that unit.

At Kanda Port, the DAVINCH DV45 processed two Yellow bombs per shot with an average cycle time of 150 minutes, or 3.2 shots per 8-hour day. Over a 3.5-month period, 600 bombs were destroyed in 250 shots; an average of 2.4 bombs per shot. Assuming a 22-working-day month, the average number of shots per day was $250/(3.5 \times 22) = 3.25$, consistent with the 150-minute cycle time per shot.

Each Yellow bomb contained 18.9 kg of lewisite/mustard agent fill; thus, 83.3 pounds of agent were destroyed per shot. If manual operations, e.g., inserting the emulsion explosive into the box containing the munition, are replaced with a more automated operation, the DAVINCH throughput may increase to five shots per day, although this has not been demonstrated. Also, a larger version of DAVINCH (DV65) has the capability of destroying three Yellow bombs in a single shot; thus with automated operation, a throughput of up to 15 munitions per day is possible.

For U.S. non-stockpile munitions, the expected throughput will depend on several factors, including the size of the DAVINCH vessel to be used, the munition size, the quantity of agent to be destroyed, the explosive content of the munition and the donor charge, and whether or not automated handling procedures are used. Estimated throughput rates per 10-hour day for representative U.S. munitions have been provided by Kobe Steel and are shown in Table 4-4. These rates are for a DAVINCH DV65 having an explosive containment capability of 65 kg TNT-equivalent and assume that manual handling procedures are used. If automated procedures were to be used, the estimated number of cycles per 10-hour day would increase from 6 to 8.

The cycle time that was provided by the technology proponent for the DV65 operating under manual handling procedures was 1.5 hours. This is equivalent to the 6 cycles per day given in Table 4-4 plus a presumed 1-hour allowance for start-up and shutdown and/or minor delays. This cycle time is substantially shorter than the demonstrated 2.5-hour cycle time for the smaller DV45 that operated in Japan.

The quantity of agent that can be destroyed in a single DAVINCH cycle will also vary. Table 4-5 gives these quantities for the same munitions as those in Table 4-4.

Because there is no neutralization step, the throughput rate for DAVINCH is higher than it is for the EDS-2, which conducts only one detonation every other day, albeit with up to six munitions destroyed per detonation, depending on the munition size. The DAVINCH generates some liquid wastes. These result from use of the decontamination spray, when used; from residual liquid in munitions recovered from underwater; and from the cooling of the offgas. The volumes are small relative to those generated from neutralization and are sent to an offsite waste treatment facility for further processing and disposal.

TABLE 4-4 Estimated DAVINCH DV65 Throughput Rates

Munition	Munitions per Cycle	Cycles per 10-hr Day	Munitions per 10-hr Day
4.2-in. mortar, M1	6	6	36
75-mm projectile, M64	5	6	30
5-in. projectile, MK VI	3	6	18
5-in. projectile, MK 54	2	6	12
155-mm projectile, MK II	2	6	12
8-in. projectile, T174	1	6	6
Bomblet, M139	12	6	72
105-mm projectile, M60	5	6	30
100-lb bomb, M47	1	6	6
115-lb bomb, M70	1	6	6

SOURCE: Information provided by Ryusuke Kitamura, Kobe Steel, Ltd., to the committee, March 25, 2006.

TABLE 4-5 Agent Quantities Destroyed per DAVINCH DV65 Cycle

Munition	Agent and Weight	Items per Cycle	Agent Weight per Cycle (lb)
4.2-in. mortar, M1	Mustard agent, 6.5 lb	6	39
75-mm projectile, M64	Mustard agent, 1 lb	5	5
5-in. projectile, MK VI	Mustard agent, 5.4 lb	3	16.2
5-in. projectile, MK 54	GB, 4.2 lb	2	8.4
155-mm projectile, MK II	Phosgene, 11 lb	2	22
8-in. projectile, T174	VX, 15.7 lb	1	15.7
Bomblet, M139	GB, 1.3 lb	12	15.6
105-mm projectile, M60	Mustard agent, 3.2 lb	5	16
100-lb bomb, M47	Mustard agent, 70 lb	1	70
115-lb bomb, M70	Lewisite, 83 lb	1	83

SOURCE: Information provided by Ryusuke Kitamura, Kobe Steel, Ltd., to the committee, March 25, 2006.

The inner DAVINCH vessel is replaceable and, as stated by the manufacturer, can be used for at least 1,000 shots. Because the munition fragments tend to strike the vessel walls in the same general area following each shot, the liner is periodically rotated in order to distribute the impact areas around the circumference of the vessel.

Process Safety

DAVINCH requires between 20 and 25 workers plus laboratory personnel. All operations involving munition handling and the manual insertion of slurry explosive around the munitions are carried out by workers wearing low-level PPE (Level D). Higher levels of PPE are used if leaking munitions are to be handled. Since insertion of the munitions into the inner vessel is done using a robotic arm, presumably there is no worker exposure during that operation. Following detonation and evacuation of offgases, a spray decontamination solution is used if residual quantities of agent are detected. The heat-treated munition fragments are periodically removed remotely. Consequently, there should be no worker exposure to agent after the munitions are destroyed.

Public and Regulatory Acceptability in a U.S. Context

DAVINCH technology has not been permitted for use in destroying chemical weapons in the United States, although it has been used successfully in Japan for this purpose. No significant regulatory issues were identified to indicate that the DAVINCH technology could not meet U.S. environmental regulatory requirements if appropriate information (such as verified DRE, residual levels of dioxin, furans, arsenic, and any other chemicals of regulatory concern) is developed and provided to the regulators in a timely manner.

Additional testing of DAVINCH technology will be required prior to its being permitted in the United States for treatment of chemical weapons and materiel. Following a detonation, the inner vessel can be monitored for the presence of agent and, if necessary, an additional explosive cleansing shot can be carried out to remove trace quantities of agent, and/or a spray decontamination solution can be injected into the inner vessel for the same purpose. Offgases from the detonation are held in a storage tank and tested for agent. Depending on the agent level detected in the offgas, it can be either returned to the inner vessel for further agent destruction in a cleansing shot or sent to a gas treatment

unit—either a combustor (incinerator) or a cold plasma unit—before being passed through carbon adsorption beds.

The public reaction to DAVINCH is not yet known and may be complex since no DAVINCH units are operating in the United States upon which to base a perception. Moreover, there is no U.S. regulatory experience with this technology, and the use of thermal treatment to destroy any remaining agent in the detonation offgases might receive a mixed reaction from both the concerned public and regulators. However, public acceptance is likely to be favorable in light of the high DRE that is achieved and because all process residuals can be held and tested prior to release. Moreover, because the munitions are detonated in a vacuum, DAVINCH technology can be used in an urban area (and was so used in Japan) with greatly reduced noise and vibration, possibly to a point where these would not be of concern to the general public. At a distance of 0.2 km (640 feet), the noise resulting from a DAVINCH detonation was reduced from 72 dB at atmospheric pressure to 65 dB under vacuum conditions, and this 7 dB reduction in noise held for greater distances as well. An extensive public outreach process was undertaken prior to and during use of DAVINCH at Kanda Port in Japan, with frequent meetings held with public interest groups (Asahina, 2004). It is anticipated that a similar outreach effort would take place in the United States were DAVINCH technology to be used here.

Secondary Waste Issues

The waste streams produced by the DAVINCH technology are (1) gases resulting from the detonation and (2) heat-treated munition fragments that have been decontaminated to a point where they can be released or recycled. The gases can be stored in a buffer, tested for agent and other constituents, and sent to a post-processing facility for cleaning. Although the gases are currently combusted/incinerated and scrubbed, it may be possible to treat them in a plasma arc process that would clean them and destroy any residual agent. The public acceptability of doing this is not known, since treatment in a plasma unit could also be perceived as incinerating the offgases.

Arsenic recovery also presents a problem since nearly all of the arsenic resulting from DAVINCH operations is in dust, on munition fragments, or on the walls of the inner vessel. Although most of the arsenic on the vessel walls can be scraped off, some may remain in microcracks in the vessel wall that result from the detonations. Because removal of this arsenic is difficult, it is not routinely removed.

Process Cost Issues

Quantitative cost information for the acquisition and operation of a DAVINCH system was not available to the committee. Based on operating experience in Japan, the DAVINCH could be a cost-effective technology, especially if moderately large quantities of items (several hundred or more) are to be destroyed and if the physical sizes and/or the net explosive weights of the items to be destroyed exceed the capacities of other detonation-based technologies.

Operating costs may be greater than they are for the EDS since more staff may be needed (about 20 to 25 for the DAVINCH vs. 6 to 12 for the EDS). This may be offset, however, by the fact that DAVINCH technology has a greater capacity for accepting munitions and a higher throughput rate than the EDS, thus shortening the time that may be required for a specific application.

The life-cycle costs of acquiring, installing, operating, and removing a DAVINCH unit at a particular location will depend on numerous factors, including (1) the costs of acquiring the DAVINCH unit and transporting it and related equipment to the site; (2) site preparation costs; (3) the number of items to be destroyed, their explosive configuration, and the quantities of agent fill (these factors will influence the throughput rate and time duration of a campaign); (4) site-specific regulatory compliance costs; (5) the costs of secondary waste treatment; and (6) the requirements for disposal of treated residuals.

Summary

The DAVINCH technology uses a large detonation chamber in which chemical munitions and their contents are destroyed when donor charges surrounding the munitions are detonated under a near vacuum. Although the process does not require use of a reagent to destroy the agent—the destruction is accomplished by a shock wave, expansion and thermal heating from the detonation gases, and a fireball in the chamber—offgases are produced that require some secondary treatment by, for example, combustion and scrubbing.

DAVINCH technology has been used in Japan to destroy 600 Japanese chemical bombs, some containing a lewisite/mustard agent mixture and others containing vomiting agents. The technology has not been used to destroy any U.S. non-stockpile chemical munitions.

The size and the explosion containment capability of versions of the DAVINCH technology are substantially greater than those of the largest treatment technology used in the United States for RCWM (the EDS-2), and its throughput also exceeds that of the EDS-2 by a factor of at least 3. It has demonstrated the ability to destroy over 80 pounds of agent (a lewisite/mustard agent mix in two Japanese Yellow bombs) in a single application and to have destroyed 10.14 pounds of explosive (picric acid) in these bombs.

The DAVINCH technology appears to be safe and effective. The external donor charges allow DAVINCH to be used to open agent-filled containers, inert munitions, and munitions containing energetics in order to access and destroy the agent. Because it is larger, DAVINCH is less mobile than the EDS-2, although a transportable version is under development.

TABLE 4-6 Size Specifications for Two Dynasafe Static Kiln Models

	SK1200	SK2000
Explosive containment TNT-equivalent, lb (kg)	2.64 (1.2)	5.06 (2.3)
Length, m	4.5	6.0
Width, m	4.35	5.5
Height, m	6.0	8.0
Weight, kg	24,000	40,000
Approx. detonation chamber volume, m^3	0.91	4.19

SOURCE: Information provided to the committee by UXB International, Inc., August 19, 2005; <http://www.dynasafe.com/destruction-of-munitions-static-kiln.html>.

Although application of DAVINCH technology to future U.S. non-stockpile disposal needs will depend on the nature of the items to be disposed of, DAVINCH technology has potential applicability at those U.S. sites where a temporary facility can be placed and could be used to dispose of medium to large quantities (hundreds to thousands) of items containing chemical agent or that are agent contaminated. It is probably not cost effective to dispose of items unlikely to contain agent, e.g., containers that have been previously burnt out, or for small numbers of small chemical-containing items, e.g., bomblets or small caliber projectiles, where the EDS technology would have greater applicability.

DYNASAFE TECHNOLOGY

Description

Dynasafe is the tradename for a static kiln manufactured by Dynasafe AB, a Swedish company that designs and manufactures products for the containment of explosions, including mobile explosion containment vessels used by police departments and the Burster Detonation Vessel, used by the NSCMP at its Munitions Assessment and Processing System facility in Edgewood, Maryland.[17]

The Dynasafe static kiln is a near-spherical, armored, dual-walled high-alloy stainless steel detonation chamber (heated retort) inside a containment structure (Ohlson et al., 2004).[18] The total thickness, including a safety layer, is 15 cm. The detonation chamber can operate in a pyrolytic or oxidizing environment. Intact munitions are indirectly heated by electrical resistance elements between the inner and outer walls of the detonation chamber. The munitions are heated to a temperature of 400°C-600°C, resulting in deflagration, detonation, or burning of the munition's explosive fill. The chemical agent in the munition is destroyed as a result of the shock wave from the detonation when this occurs, the resulting gas pressure (measured at 10 bars, or 9.87 atmospheres), and decomposition due to the heat in the chamber. No explosive donor charge is used, and no reagent is needed to neutralize the agent. The kiln operates in a semibatch mode. Two sizes of the static kiln are available. Specifications are provided in Table 4-6.

Chemical munitions are placed in a cardboard box or carrier, preferably by robot but if need be, manually. The box is placed on an elevator for the SK2000 version or on a trolley conveyor for the smaller units and is transported to the top of the kiln. Leaking munitions are placed in an airtight plastic bag and then in the box before being loaded. Munitions that are already in a single round container can be loaded onto the conveyor or elevator while in the container.

The boxed munitions are fed into the kiln through two loading chambers (see Figure 4-4), each having its own hydraulically operated door and inflatable seal. The upper loading chamber has airlock doors and the lower loading chamber has a hot blast door between it and the kiln's detonation chamber. The doors, loading chambers, and detonation chamber are all designed to resist and contain the overpressure from a detonation of up to 2.3 kg TNT-equivalent. An additional 2.3 kg TNT-equivalent of overpressure containment is included in the design as a safety margin. To provide total containment, the doors are gas-tight as well as explosion-resistant. The interior of the detonation chamber is not open to the atmosphere while munitions are loaded, and the loading chambers are offset for safety purposes.

Using a hydraulic arm, the boxed munitions are pushed into the loading chambers, moving from one chamber to another, and are then dropped onto a heated (500°C-550°C) shrapnel (scrap) bed at the bottom of the detonation chamber. The maximum drop is about 2 meters. The purpose of this bed is to protect the chamber walls from munition fragments when detonation occurs. If sufficient energy from energetics in the munition is released, no additional external heating from the electrical resistance elements is required. If the munition does not contain energetics, then additional heat can be provided by the electrical resistance elements.

[17]Except where otherwise note, technical information for this section came mostly from meetings with representatives of Dynasafe AB (Sweden) and UXB International, Inc. (United States) (see Appendix D).

[18]See also <http://www.dynasafe.com/destruction-of-munitions-static-kiln.html>.

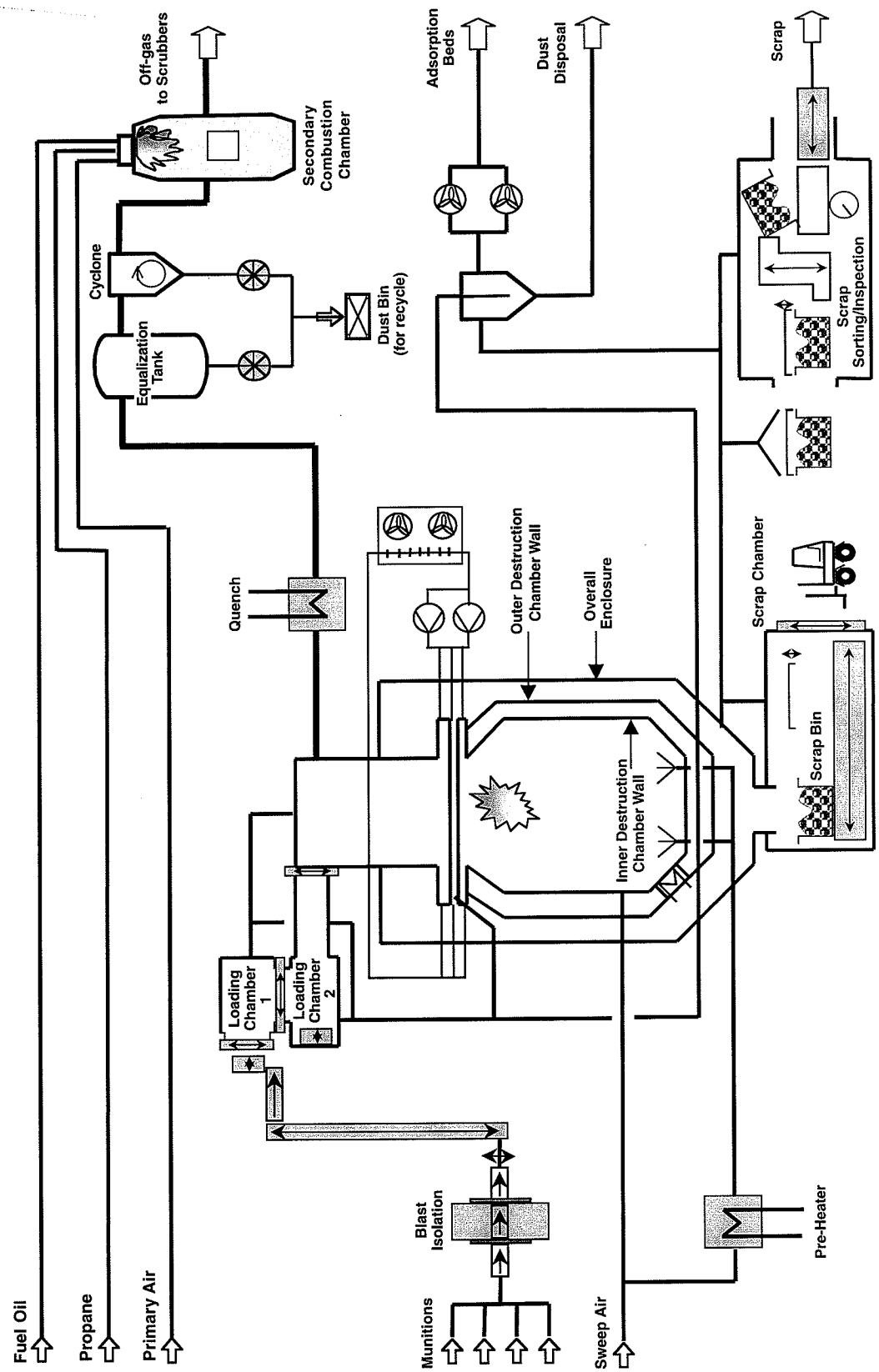

FIGURE 4-4 Dynasafe static destruction kiln process flow. SOURCE: Harley Heaton, UXB International, Inc., April 10, 2006.

During operations, conditions in the detonation chamber are monitored using an air-cooled camera located in a tube that protrudes into the chamber. A slight negative pressure is maintained in the chamber to enable detection of the pressure pulse that takes place when a munition detonates. A microphone is used to detect the sound of a detonation, and vibration of the chamber is also recorded.

When the detonation chamber has a full scrap load, i.e., when it is about 50 percent full, a clean burning period takes place during which the scrap metal is heated to 550°C-650°C for several hours to meet GPL requirements. After completion of the clean burning period, the detonation chamber disengages from the lower loading chamber and is rotated almost 180 degrees clockwise in order that most of the munition fragments can be dropped into a scrap bed in a bin. A low baffle plate in the detonation chamber, near the place where the scrap exits, retains some of the scrap/shrapnel for the next load. The metal scrap bins are enclosed within the outer housing of the kiln to prevent dust from escaping and to allow confirmation that the metal can be released. When scrap removal has been completed, the kiln rotates back to its upright position and the retained scrap in the detonation chamber falls to the bottom.

During operations, offgases from pyrolysis and detonation are continuously evacuated from the kiln, and compressed air is used to sweep all offgases from the combustion chamber. If the process is operated as a closed system—that is, as a batch reactor—the offgases can be held inside the detonation chamber for as long as necessary to ensure that agent destruction takes place. The offgases can also be analyzed prior to their release to the offgas treatment system. If necessary, nitrogen can be used as the sweep gas. When the process is operated as an open system, the offgases are transferred to a heated buffer that serves as an expansion tank and as a cyclone to remove coarse dust. European Union environmental regulations require that to ensure agent destruction, a secondary combustion chamber with a 2-second residence time and operating at 1100°C must be used. Other offgas treatment steps may include use of a quench tower to cool the gases to prevent dioxins and furans from forming, as well as various scrubbers and equipment to capture fine particulates and to remove heavy metals and metallic oxides. The use of such equipment will depend on whether the Dynasafe unit is operated as an open or a closed system, the constituents of the offgas, and environmental requirements.

The elapsed time for a munition destruction cycle will vary with the explosive and agent content of the munition. For conventional munitions, throughput of 25-35 detonation cycles per hour has been demonstrated for explosive loads of 2 kg TNT-equivalent and can be greater for smaller explosive loads. Daily throughput includes the clean burning time. The throughput for chemical munitions will depend on whether the Dynasafe is operated as an open or a closed system, the number of munitions that are fed into the detonation chamber per cycle, and the number of cycles per hour.

Country-by-Country Experience

Dynasafe static kilns have been used to destroy a substantial variety of conventional munitions in several countries. The applications include these:

- Sweden, destruction of detonators and small arms ammunition in SK400 (1997) (no longer available).
- Spain, destruction of conventional munitions in SK1200 (1997).
- Sweden, destruction of conventional munitions in SK800 (1999) (no longer available).
- Japan, destruction of antipersonnel mines and conventional munitions in SK1200 (2000).
- Portugal, destruction of antipersonnel mines and conventional munitions in SK1200 (2001).
- Asia, destruction of conventional munitions in SK2000 (2003-2004).

A prototype development unit has destroyed over 100 kg of mustard, lewisite, and Clark I and II agents, although these agents were not contained in chemical munitions. In February 2006, 100-mm German grenades containing energetics and 1.5 kg of mustard agent fill were successfully destroyed in the Dynasafe SK2000 at the GEKA facility in Munster, Germany.[19] Three grenades were destroyed per feed cycle. The ability of Dynasafe to access and destroy agent in thick-walled steel munitions will also be demonstrated at GEKA. A detailed description of the use of the Dynasafe SK2000 at the facility is provided in Weigel et al. (2004).

Evaluation Factors Analysis

Process Maturity

The Dynasafe family of static kilns is a mature technology that has been used for several years to destroy a substantial variety of conventional munitions, as noted above. The kilns have been both safe and effective for this application. Using this experience as a basis, the Dynasafe static kiln has been modified to destroy chemical munitions and was doing so at the above-mentioned German government facility in Munster, Germany, when this report was being prepared. As of April 21, 2006, at least 1,000 munitions containing mustard agent, phosgene, or diphenylchloroarsine (Clark I) agent had been destroyed.

Modifications include making the kiln gas-tight to contain any agent remaining in offgases, heating the scrap metal to remove all traces of agent on metal surfaces, and using an elaborate offgas treatment system to scrub the detonation gases and remove any remaining traces of agent.

[19]GEKA, Gesellschaft zur Entsorgung von chemischen Kampfstoffe und Rüstungs-Altlasten.

Although the Dynasafe static kiln has not yet been tested or used to process U.S. non-stockpile chemical munitions, it appears to have the capability to do so since many of these munitions are within the size and explosive containment capabilities of the largest Dynasafe unit, the SK2000, and contain the same mustard agent fill found in the munitions being destroyed in Munster. As this report was being prepared, none of the Dynasafe kilns had been permitted for operation in the United States for the destruction of chemical munitions.

Process Efficacy/Throughput

The Dynasafe static kiln heats munitions until the energetics within them detonate, causing the agent to be exposed to the resulting shock wave, blast pressure, and heat. It is possible, however, that for some items, the energetics and/or agent will undergo deflagration (rapid combustion driven by heat transfer). In fact, deflagration rather than detonation is stated to be the usual destruction process in the detonation chamber.[20] Some items only contain agent, the energetics having been removed or never having been placed in the munition (as would be true, for example, with a test round). In these cases, although the agent may vaporize within the munition body and may rupture the munition body as a result, this is not guaranteed to happen. In such cases, the manufacturer states that the agent will escape as it vaporizes, either through the threads in the munition nose closure or through a weak point in the munition body.

In testing at GEKA in early 2006,[21] empty inert grenades were filled with water, welded shut, and placed in the SK2000 detonation chamber. The water fill vaporized and, as a result of the increased internal pressure, destroyed the grenades, as observed by the control room operators. In additional testing, partially sealed, water-filled grenades were placed in the detonation chamber and heated. As internal pressure slowly increased, the water vapor escaped through screw threads. Absent the sudden destruction of the grenades, it was not possible to detect the escaping vapor, and the grenades emerged intact. The grenades were then x-rayed and cut open to verify that they were empty.

Results to date indicate that the agent in all sealed or partially sealed inert munitions is destroyed, although operating results for grenades and other munitions that may contain mustard agent heels were not available. However, the absence of a positive indication that agent destruction has taken place for those munitions where agent slowly escapes may be a concern, and it may increase process costs and complexity if post-processing actions are required to confirm that no agent remains in the munition.

Finally, testing of explosively configured munitions containing agent simulants has been conducted to demonstrate accessing and destruction of the agent simulant in the munitions.

The technical director at GEKA has stated that the worst case would be one in which a munition containing neither agent nor energetics is fed into the chamber: in that case, the munition would experience nothing other than being heated and would emerge as it entered and have to be opened under controlled conditions to ascertain its original condition.[22] Opening the munition would increase costs as well as the potential for human exposure. If processing needed to stop while the munition was examined to confirm that it is empty and inert, throughput might also be reduced.

The Dynasafe static kilns and related material handling equipment are large: For example, the largest unit, the SK2000, is 6 meters long, 5.5 meters deep, and 8 meters high. The weight of this unit is 44.1 tons. A smaller version, the SK1200, is 4.5 meters long, 4.35 meters deep, and 6 meters high. This unit weighs 26.4 tons, but a mobile version is under development (Dynasafe, 2006). The mobile version consists of eight containers: three for the static kiln, three for the offgas treatment system, and two for spare materials and a workshop. These containers can be carried on three flatbed trailers, and the mobile version can be operated in either an open or closed mode.

The explosion containment capabilities of the Dynasafe static kilns are comparable to those of the EDS-1 and EDS-2 in use by the U.S. Army: 2.64 pounds TNT-equivalent for the SK1200 vs. 3 pounds for the EDS-1 and 5.06 pounds TNT-equivalent for the larger SK2000 vs. 5 pounds for the EDS-2. The detonation chamber of the SK2000 is substantially larger than the EDS-2 chamber; it has the approximate shape of a 2-meter-diameter sphere and, thus, a volume of about 4.2 m^3 compared to a volume of 0.61 m^3 for the EDS-2. The largest munition that can be fed into the feed system of the SK2000 currently in operation at Munster is 30 cm in diameter and 60 cm long. The manufacturer states that the feed system can be reconfigured to allow larger munitions, e.g., 8-inch projectiles having a length of 89.4 cm, to be fed through the loading chambers and into the detonation chamber if the need arises.

In the event that larger items are recovered by the NSCMP (such as 100-pound, 500-pound, and 750-pound bombs), their treatment is more problematical because they are all more than a meter long and contain significant quantities of agent. For example, a 100-pound M47 bomb contains 70 pounds of mustard agent and a 750-pound MC-1 bomb contains 220 pounds of sarin (GB). Although these items can be processed through the SK2000, the technology provider states that the amount of agent in these items would require

[20]Meeting between representatives of DYNASAFE AB and a committee fact-finding group, Munster, Germany, January 16, 2006.

[21]Holger Weigel, Dynasafe Germany, presentation to the committee on March 1, 2006.

[22]Hans-Joachim Grimsel, technical director, GEKA, in a meeting with a fact-finding group of the committee, Munster, Germany, January 17, 2006.

TABLE 4-7 Estimated Dynasafe SK2000 Throughput Rates[a]

Munition	Munitions per Cycle	Cycles per Hour	Munitions per Hour	Munitions per 10-hr Day
4.2-in. mortar, M1	4	3	12	120
75-mm projectile, M64	9	3	27	270
5-in. projectile, MK VI	4	3	12	120
5-in. projectile, MK 54	3	3	9	90
155-mm projectile, MK II	2	2	4	40
8-in. projectile, T174[b]	1	2	2	20
Bomblet, M139	16	3	48	480
105-mm projectile, M60	4	3	12	120

[a]Based on operation as an open (continuous mode) system versus a closed (batch mode) system.
[b]A fragment shield would be placed around the body of the 8-inch projectile to protect the detonation chamber walls.

SOURCE: Harley Heaton, UXB International, presentation to the committee on February 15, 2006.

TABLE 4-8 Agent Quantities Destroyed per Dynasafe SK2000 Cycle

Munition	Agent and Weight	Items per Cycle	Agent Weight per Cycle (lb)
4.2-in. mortar, M1	Mustard agent, 6.5 lb	4	26
75-mm projectile, M64	Mustard agent, 1 lb	9	9
5-in. projectile, MK VI	Mustard agent, 5.4 lb	4	21.6
5-in. projectile, MK54	GB, 4.2 lb	3	12.6
155-mm projectile, MK II	Phosgene (CG), 11 lb	2	22
8-in. projectile, T-174	VX, 15.7 lb	1	15.7
Bomblet, M139	GB, 1.3 lb	16	20.8
105-mm projectile, M60	Mustard agent, 3.2 lb	4	12.8

SOURCE: Harley Heaton, UXB International, presentation to the committee on February 15, 2006.

that the bulk of the agent be removed from the ordnance before treatment. The drained agent and ordnance item would be treated separately. The method to be used for agent destruction is not specified.[23]

The demonstrated throughput for the SK2000 processing conventional munitions has varied with the explosive loading. For a load of 4.4 pounds (2 kg) TNT-equivalent, the SK2000 can accept at least 20 loads per hour, a cycle time of 3 minutes per load. The throughput rate for operation with chemical munitions will be less and will depend on how the Dynasafe is operated, the explosive loading, and the composition and quantity of agent to be destroyed. If operated as a closed system with the offgas held and tested prior to release to the offgas treatment equipment, then one cycle per hour is expected. If operated as an open system, then two to three cycles per hour are expected.

The number of munitions fed per cycle will depend on the munition size, the quantity of agent to be destroyed, and the explosive content (net explosive weight). Estimated hourly throughput rates for some munitions have been provided by Dynasafe representatives and are shown in Table 4-7. These rates are for a Dynasafe SK2000 operating in a continuous mode.

The quantity of agent that can be destroyed in a single cycle will also vary. Table 4-8 gives these quantities for the same munitions listed in Table 4-7.

The average throughput rate will include the periodic multihour clean-burning period, when munitions are not fed into the detonation chamber, and the scrap metal in the bottom of the chamber is heated to 550°C-650°C to meet general population limit (GPL) requirements. Dynasafe is capable of handling mixed loads as long as the explosive containment capacity of the detonation chamber is not exceeded. The DRE for chemical agent destroyed in Dynasafe kilns and postprocessing units has been measured at 99.9999 percent and greater, down to the limit of detection for the instruments used. This DRE was demonstrated in a subscale model of the detonation chamber at the GEKA facility in Munster in 2002. Up to 5.5 pounds per hour of mustard agent was destroyed, as well as Clark I and Clark II vomiting agents and $AsCl_3$, with 220 pounds of these agents destroyed under pyrolytic conditions. This prototype, however, was not a blast chamber, and apparently the agents were destroyed by

[23]Information provided by UXB International in response to committee questions of February 2006.

heating and gasifying them in the chamber. The fate of the arsenic in the agent was not specified.

Although agent destruction was demonstrated, the agent was not contained in real or simulated munitions and energetics were not present. Tests of the Dynasafe detonation chamber using nerve agents have also not been conducted and are not planned since these agents are not present in the German chemical items to be destroyed at GEKA.

As noted above, pyrolysis in the detonation chamber is to be followed by offgas treatment, including, as needed, a cyclone, a combustion chamber, a quench tank, and various scrubbers and filters. This offgas treatment process, although standard, is fairly complex when compared to other detonation-based technologies, and its reliability, cost, and effectiveness when processing chemical munitions needs to be demonstrated. It should be noted that this extensive offgas treatment is specific to the Dynasafe installation in Munster, Germany, where a substantial variety of agent fills are anticipated and where the operator wishes to be able to process every expected gas constituent. For a Dynasafe operating in the United States where agent fills may differ and where the regulatory requirements for secondary waste processing may not be the same as the requirements in the European Union, the offgas treatment facility configuration may differ and could be either more or less elaborate than at the facility in Munster depending on the agent fill and on whether the Dynasafe operates as a closed (batch) or an open (continuous) system.

The Dynasafe static kiln and its related equipment take about 3 months to assemble once the equipment is on site. Following its use, the installation takes about three months to disassemble. While in operation, four to eight people are needed to operate the unit: control room staff, a loading supervisor, and an on-call engineer. For operations with chemical items, more staff may be needed, but the number was not available to the committee.

Process Safety

The potential for worker exposure to agent is about the same as with any other operation where RCWM need to be handled, boxed or packaged, and moved. Dynasafe workers do not use any protective clothing, although those handling munitions are in Level D PPE. A facility may be required for workers who prepare and repackage munitions to suit up and take off the PPE. Any contaminated PPE or other equipment is disposed of in the Dynasafe detonation chamber.

The technology vendor states that boxed munitions can be removed at any time from the loading chambers and that once in the detonation chamber, sufficient residual heat remains to destroy the munition, even if there is no external energy (i.e., electricity for the resistance heaters) to further heat the chamber.

The monitoring instrumentation used (e.g., MINICAMS), location of the monitors, and monitoring procedures to be followed if Dynasafe were used in the United States for destroying non-stockpile chemical materiel are to be determined. Minimal agent monitoring equipment is used with the Dynasafe at the GEKA facility, as a result of an operating philosophy that emphasizes robust engineering, vapor containment, and extensive offgas treatment.

Public and Regulatory Acceptability in a U.S. Context

Although Dynasafe has not been permitted for use in the United States for chemical munitions, it will be undergoing extensive operational use with German chemical munitions and will be required to meet all European Union environmental regulations. The Dynasafe manufacturer believes that it will also be able to meet all U.S. environmental regulations, although this remains to be demonstrated. If operated as a closed system, postdetonation gases can be held in the detonation chamber and monitored for agent. If any agent is detected, heating of the gases can be continued until agent concentration drops to an acceptable level before the gases are processed further. This ability to hold and test the gases prior to either continued heating in the chamber or release to offgas processing equipment should increase the acceptability of Dynasafe technology to U.S. regulators and interest groups. If operated as an open system, the offgases are further treated and any remaining agent is destroyed in an afterburner (combustion chamber). If this treatment is viewed as an incineration step, it may be considered to be a negative factor in terms of the acceptability to the public and to regulators.

Odors, vibrations, noises, and other sensory impacts should not be noticeable to the public while the Dynasafe static kiln is in operation. The detonation takes place in a thick, double-walled chamber inside a containment structure, and the external impacts, if any, should be minimal.

Secondary Waste Issues

As noted above, offgases can be cleaned, tested, and treated prior to release. The scrap metal removed from the bottom of the detonation chamber is claimed to meet GPL requirements. If the chemical munitions contain tarry agent heels from polymerized or thickened mustard agent, then it may be difficult to destroy this material in the detonation chamber. In that situation, prolonged postdetonation treatment via continued heating of the metal in the clean-burning period may be required. This clean-burning period is expected to last several hours, but the actual time required for the agent concentration to be reduced enough to meet the GPL is not known.

A second issue regarding waste treatment involves the accumulation and disposal of arsenic following the detonation. The technology proponent acknowledges arsenic will accumulate on the walls of the detonation chamber and states that the arsenic will be removed from the chamber walls by

subsequent detonations and that the chamber can be steam cleaned to remove the arsenic. Removal of arsenicals in the offgas is also an issue. Since arsenic will be present in some of the munitions to be destroyed, e.g., Clark-type agents in the German grenades, its treatment and recovery will take place in an ionizing wet scrubber to remove arsenic-containing dust.

The Dynasafe technology generates some liquid wastes. These come from the use of steam to clean the detonation chamber, from the quench tank, and from various scrubbers used to treat the offgas. The volumes are small compared with those generated from agent neutralization technologies.

Process Cost Issues

Although no quantitative cost information was available to the committee, qualitative factors indicate that the Dynasafe SK2000 static kiln could be cost effective when used to destroy chemical munitions that are commensurate with its size. The Dynasafe SK series of static kilns is a well-established product line routinely used to destroy conventional explosively configured small arms and munitions. Thus, there is an operational track record to indicate that they can compete with other methods for destroying such items. One version of the Dynasafe kiln is being used by the NSCMP to destroy bursters in a burster detonation vessel at the Munitions Assessment and Processing System facility in Edgewood, Maryland. The acquisition cost of this unit should provide a benchmark for estimating a comparable cost for a Dynasafe unit used for chemical munition processing since the operation of the loading and detonation chambers should be similar.

As of the preparation of this report, the Dynasafe static kiln had been used to destroy some German chemical weapons; however, cost data for operating the kiln were not available. Since the kiln only requires two staff to operate and two to four more for supervision and in a control room, labor costs are expected to be low. A more substantial cost component may be for operating and maintaining the fairly complex offgas treatment system (e.g., a cyclone, a combustion chamber, quench, scrubbers, and filters) used in conjunction with the Dynasafe static kiln when processing chemical munitions. The complexity of the gas treatment system will depend on the offgas constituents to be treated, regulatory requirements, and whether or not the system is operated in a continuous (open) or batch (closed) mode. Thus, it is not possible to estimate the capital and operating costs for a Dynasafe offgas treatment system in the United States based on the experience in Germany, although the complexity of that system may suggest an upper bound on such costs.

As with other munition destruction systems, the Dynasafe will incur costs for setup, teardown, regulatory compliance, monitoring, lab support, and disposal of treated residuals such as metal fragments. The magnitude of these and other operating costs will depend on the specific application, the duration of operation, state and federal permit requirements, and the nature of the materiel to be treated.

Summary

The Dynasafe technology has been demonstrated to be effective in destroying small conventional munitions and explosives, in destroying some chemical agents, and in destroying mustard agent-filled, explosively configured German grenades. If, during continued operation at GEKA in destroying German munitions containing a variety of agent fills (which was in progress as this report was being prepared), the Dynasafe static kiln demonstrates the ability to safely and effectively access the agent in such munitions, destroy the chemical agents inside, and process secondary wastes, then it could be a viable technology for use in disposing of U.S. non-stockpile chemical munitions.

The Dynasafe technology could find application at U.S. sites where fairly large numbers of chemical munitions such as bomblets, mines, 105-mm projectiles, and 155-mm projectiles are recovered and where effective use could be made of its high throughput capacity. Its limited explosive containment capacity, however, limits it to destroying items of up to 5 pounds TNT-equivalent, about the same as the EDS-2. This limited capacity also places a requirement on the Dynasafe operator to not introduce high-explosive rounds into the Dynasafe detonation chamber that would exceed the chamber's explosive containment capacity. Even with a 100 percent safety margin—allowing up to 10 pounds TNT-equivalent of explosive loading—the detonation of such rounds could reduce the life of the chamber and, as a worst case, could severely damage it.

The Dynasafe technology depends on heat rather than donor charges to destroy energetics within a munition and to access the agent fill. This process is expected to be effective for chemical munitions that contain energetics but may be more problematic for inert chemical munitions if the munition emerges from the detonation chamber intact and in situ agent destruction needs to be confirmed. Such confirmation will be required to verify agent destruction does take place. Following this verification of agent destruction, the Dynasafe static kiln can be considered to be an effective and flexible technology for destroying large quantities of chemical munitions within its explosive containment and munition size constraints.

COMPARATIVE EVALUATIONS OF TIER 1 MUNITIONS PROCESSING TECHNOLOGIES

As defined in detail in Chapter 3, the committee used five basic evaluation factors to assess the status of Tier 1 technologies. These factors were commented on earlier in this chapter in the respective evaluation factors analysis sections for each of the three Tier 1 international munitions processing technologies.

TABLE 4-9 Evaluation Factor Rating Comparison of Tier 1 Munitions Processing Technologies with U.S. EDS

	Evaluation Factors (Rating[a])[b]				
Technology	Process Maturity	Process Efficacy/ Throughput	Process Safety	Public and Regulatory Acceptability in a U.S. Context	Secondary Waste Issues
U.S. EDS	+	+	+	+	0
CDC	+	+	+	0	0
DAVINCH	+	+	+	0[c]	+
Dynasafe	+	+[d]	+	0	0

[a]Legend: +, acceptable; 0, partially acceptable; –, unacceptable; ?, inadequate information.

[b]Costs associated with purchasing and operating a given technology would also be a significant criterion, but the committee did not have access to capital or operating cost data.

[c]DAVINCH is more likely to be acceptable to the public than the CDC and Dynasafe because of its demonstrated ability to hold and test waste gases, but it has not yet been permitted (see the section "Public and Regulatory Acceptability in a U.S. Context" in Chapter 4).

[d]Rating is contingent on the ability of the Dynasafe process control system to confirm agent destruction in all munitions that do contain agent.

Table 4-9 rates the Tier 1 munitions processing technologies according to these evaluation factors and compares them to the EDS technology that is presently in use by the NSCMP. The symbols used in the ratings scheme are also defined in more detail in Chapter 3.

The committee next considered several engineering parameters important to any comparison of these technologies. This comparison is presented in Table 4-10 for specific versions of each of the technologies rated in Table 4-9. The importance of these engineering parameters can be indicated as follows:

- *Throughput rate.* Maximum throughput rate may not be important for the disposal of small numbers of munitions but may be significant where a large number of munitions are to be destroyed. The estimated daily throughput rates for the three detonation technologies are compared in a more quantitative fashion in Table 4-11.
- *Destruction verification capability.* Whether the agent destruction can be confirmed before the liquid or gas is released to secondary treatment (hydrolysate disposal or offgas treatment) may be a consideration that is important to public stakeholders and regulators. This is often referred to as a hold-test-release capability.
- *Largest munition.* The largest munition and the largest explosive loading that can be handled by a specific unit will be important in assessing which technologies should be considered for a given mix of munitions.
- *Reliability/operability.* The experience that a given type of system has accumulated in processing conventional and chemical munitions is a significant factor indicator in the choice of technology.
- *Transportability.* Whether a specific technology is transportable—that is, whether it is movable from place to place, as required, or must be built as a fixed facility—may be a significant factor in selecting a technology for a given or anticipated scope of work (number and sizes of munitions, agent types, etc.) at a specific location.

Chamber lifetime is among the considerations that would have a significant impact on cost, reliability, and safety. Were the U.S. Army to further investigate any of the detonation-type technologies examined in this report, a structural integrity assessment for the number of detonation cycles that could be anticipated for the life of the detonation chamber with respect to the types of munitions to be processed would give important information. Likewise, a failure modes and effects analysis for each type of detonation system under consideration would be highly desirable.

The American Society of Mechanical Engineers (ASME) has formulated design codes to ensure the safe and reliable operation of pressure vessels. ASME has formed a committee to examine the design of pressure vessels subjected to intermittent impact loadings (i.e., vessels in detonation services). Two of the companies that supply detonation chambers (DAVINCH and CDC) have representatives on that committee. The committee responsible for this report understands that the design requirements for pressure vessels subjected to intermittent impact loadings will be defined in a Code Case that is essentially an addendum to the ASME Section VIII pressure vessel code. The ASME Code includes significant safety factors in terms of the yield and ultimate strength values that are used and, where appropriate, requirements for impact testing. In reply to specific questions, each of the suppliers of detonation chambers indicated that they will be able to comply with the requirements of the ASME Code for pressure vessels subjected to intermittent impact loadings.

In general, costs associated with purchasing and operating a given technology constitute a significant criterion, but the committee did not have access to data on capital or operating costs. Similarly, when considering a technology choice, the composition, or anticipated composition of the munitions to

TABLE 4-10 Specific Engineering Parameters for Existing Munitions Processing Technologies

Technology Model	Throughput Rate	Destruction Verification Capability	Largest Munition	Reliability/Operability	Transportability
EDS-2	1 detonation every other day; up to 6 munitions per detonation	Liquid and gaseous effluents can be held and tested before release	5 lb TNT-equivalent; wide range of weapons acceptance; maximum: 155-mm projectile; physical size of munition determines throughput rate	Extensive experience with chemical munitions	Fully transportable; 1 trailer
CDC (TC-60)	Up to 20 detonations per 10-hr shift; estimated potential throughput given by technology proponent as 22-40/day; actual will be determined in 2006	Monitoring of offgas prior to release to carbon adsorption bed system	60 lb TNT-equivalent; 210-mm projectile	Extensive experience with conventional munitions; has demonstrated reliability; 4 years experience in production mode without failure	Transportable on 8 tractor trailers
DAVINCH (DV-60)	Yellow bombs: 9/day Red bombs: 18/day 75-mm, 90-mm munitions: 36/day	Detonation gases held in tank and tested for agent before decision made to release or provide additional treatment	65 kg TNT-equivalent; expected to be an 8-in. projectile or a small bomb	Experience with destruction of 600 Japanese Red and Yellow chemical bombs containing various agents	DV-60 designed to be a fixed facility, not transportable
Dynasafe (SK2000)	Varies greatly with munition and operating mode; if used as an open system (continuous mode), sample throughput rates are 20/day for 8-in. projectile, 40/day for 155-mm projectile, 120/day for 105-mm projectile and 4.2 in. mortar round	Open system (continuous mode): none prior to offgas treatment; closed system (batch mode): hold and test in expansion tank	5 lb TNT-equivalent; 8-in. projectile, if fragment shield used to protect chamber; up to 750-lb bomb if most of agent is drained first	Extensive experience with conventional munitions; some experience with German chemical munitions	SK2000 designed to be a fixed facility, not transportable

TABLE 4-11 Estimated Daily Throughput Rates for Three Detonation Technologies (10-hr Day)

Munition	CDC TC-60	DAVINCH DV65	Dynasafe SK2000
4.2-in. mortar, M1	40	36	120
75-mm projectile, M64	40	30	270
5-in. projectile, MK VI	22	18	120
5-in. projectile, MK 54	22	12	90
155-mm projectile, MK II	22	12	40
8-in. projectile, T174	22	6	20
Bomblet, M139	60	72	480
105-mm projectile, M60	22	30	120
100-lb bomb, M47	6[a]	6	20[b]
115-lb bomb, M70	5[a]	6	20[b]

[a]Bomb is drained into 20-lb lots and each lot separately destroyed in CDC-60.
[b]Bulk of agent is removed before treatment in SK2000. Drained agent and the item are treated separately.

SOURCES: CDC: CH2MHILL response to committee questions of February 6, 2006; DAVINCH: information provided by Kobe Steel, Ltd., to the committee on March 25, 2006; Dynasafe: information provided by UXB International to the committee on February 15, 2006.

be destroyed would also be an important factor. Insofar as it is uncertain which non-stockpile sites may be chosen for remedial action in the near term (post 2007) future,[24] as is the amount of resources that would be dedicated to recovery operations and thus the rate of recovery, the committee did not address how a technology or mix of technologies might be implemented for a specific site situation. Moreover, there is considerable uncertainty surrounding the Army's site inventory data in terms of the specific conditions, relative locations, remaining amounts of agent fills, and other characteristics of munitions to be encountered during recovery operations.

The committee also addressed the subfactors given in Chapter 3 for each of the five main evaluation factors. The subfactor questions for the Tier 1 international technologies that are suitable for munitions processing along with the EDS technology are addressed in Tables B-1 through B-5. These tables provide a convenient side-by-side means for comparing some specific aspects of the technologies in terms of the available data and the expert judgment of the committee.

FINDINGS AND RECOMMENDATIONS

Finding 4-1. The U.S. Army's EDS, although proven to be safe and effective, has a low throughput rate, is limited in the size of the munitions it can handle, and generates a liquid waste stream that must be disposed of. Consequently, while it will continue to have application for small quantities of munitions, EDS would be expected to have limited applicability to the destruction of the anticipated large quantities and variety of munitions and agent-contaminated items expected to be found at large burial sites in the United States.

Finding 4-2. Detonation-type technologies offer complementary capabilities to the EDS and all have the following characteristics:

- There is no agent neutralization step.
- All are total solutions—that is, they all access the agent, destroy the energetics and agent, and decontaminate the munition bodies.
- All require secondary thermal or catalytic treatment of offgases.
- All have a higher throughput than the EDS and the same or greater explosive containment capability.
- All have been operated safely.

Finding 4-3. The CDC is a mature technology that has destroyed 2,500 chemical munitions in Belgium. Additional testing in the United Kingdom has pointed to its acceptability in the United States in terms of efficacy and safety. Public acceptance might be qualified because the CDC is not a hold-test-release system, although it has been used here for the destruction of conventional munitions. It is the only one of the three detonation-type technologies that at present can be considered to be transportable (but mobile versions of the other two types of detonation technologies have been designed).

Finding 4-4. Of the detonation-type technologies, the DAVINCH is the only one that currently has demonstrated the ability to hold, sample, and analyze waste gases prior to releasing them into the offgas treatment system. It has the largest explosive containment capacity of the detonation-based technologies and appears to be suitable for destroying moderately large quantities of a large variety of chemical munitions.

Finding 4-5. The Dynasafe static kiln technology has been demonstrated to be effective in destroying small conventional munitions and explosives, small chemical munitions containing explosives, and in destroying some chemical agents. The ability to confirm the release and destruction of agent contained in chemical munitions that do not contain energetics needs to be demonstrated. The Dynasafe technology appears to be suitable for destroying large quantities of small to medium-sized chemical munitions.

Finding 4-6. Each detonation-type technology has different characteristics such as destruction rate, initial capital and operating costs, and ability to be moved from one location to another that are relevant to the selection of a system for a particular project. Structural integrity, defined as a specified allowable number of detonation cycles, is another factor to be considered, as would be the results of any failure modes and effects analyses.

Recommendation 4-1. The U.S. Army should select a detonation-type technology for destroying recovered chemical munitions excavated from a large burial site, although the EDS will continue to have application, especially at small sites. In view of the rapidly evolving development efforts on the three international detonation-type technologies, the U.S. Army should monitor the operations and capabilities of these technologies and collect cost and performance data with the goal of selecting one of them as the primary technology.

Finding 4-7. Procedures for measuring the destruction and removal efficiency (DRE), destruction efficiency (DE), or some other metric of performance for detonation-type processes do not appear to have been established in the United States. This gap will seriously hinder future evaluations of such technologies for possible application to non-stockpile

[24]As noted in Chapter 2, following completion by April 29, 2007, of the Chemical Weapons Convention treaty requirements applying to CWM that has already been recovered, no specific subsequent site remediation mission had been defined for the NSCMP at the time this report was being prepared.

operations. Such destruction and removal information is important for both regulators and the public.

Recommendation 4-2. To further the evaluation of detonation-type technologies for non-stockpile applications, the U.S. Army should establish accepted procedures that effectively and efficiently determine the degree of agent destruction or in some other way measure the performance of these processes. The procedures should involve the feeding of complete munitions to the process—that is, munitions containing either agent or a chemical surrogate that is more difficult to destroy than the chemical agent that is most resistant to destruction. Both the degree of agent destruction in the actual detonation event and the degree of agent destruction in the system overall should be determined. Such procedures should be developed with input from all of the relevant stakeholders.

REFERENCES

Measurement of Performance

ATSDR (Agency for Toxic Substances and Disease Registry). 2005. Public Health Assessment for Oak Ridge Reservation (USDOE) TSCA Incinerator, U.S. Department of Energy Oak Ridge Reservation, December 27. Available online at <http://www.atsdr.cdc.gov/HAC/PHA/TSCA/FINAL_TSCA_PHA_2-2-06.pdf>. Last accessed March 10, 2006.

Controlled Detonation Chamber

Bixler, B. 2005. Controlled Detonation of Chemical Weapons. Available online at <http://www.dstl.gov.uk/news_events/conferences/cwd/2005/proceedings55.pdf>. Last accessed February 28, 2006.

Blades, T.A., R. DiBerardo, G. Misko, and N. McFarlane. 2004. Demonstration/Validation of the TC-25 Donovan Blast Chamber Porton Down, U.K., Final Demonstration Test Report, April-September 2003, ECBC-TR-362, May. Aberdeen Proving Ground, Md.: Edgewood Chemical and Biological Center, Chemical Biological Applications and Risk Reduction Business Unit.

De Bisschop, H.C., and T. Blades. 2002. Destruction of Chemical Weapons: Evaluation of the Donovan Contained Detonation Chamber (CDC) in Poelkapelle, Belgium. ECBC-SP-010, July. Aberdeen Proving Ground, Md.: Edgewood Chemical and Biological Center.

DeMil International. 2004. System Hazard Analysis: TC-60 Controlled Detonation Chamber, Draft Report, June 7. Aberdeen Proving Ground, Md.: U.S. Army Edgewood Chemical-Biological Command.

DeMil International. 2005a. Throughput Analysis Controlled Detonation Chamber System, March. Huntsville, Ala.: U.S. Army Engineering Support Center.

DeMil International. 2005b. Deployment Plan Controlled Detonation Chamber System, March. Huntsville, Ala.: U.S. Army Engineering Support Center.

DiBerardo, R. 2004. Demonstration/Validation Testing of the Controlled Detonation Chamber (CDC). Available online at <http://www.dstl.gov.uk/news_events/conferences/cwd/2004/proceedings21.pdf>. Last accessed March 1, 2006.

NRC. 2002. Systems and Technologies for the Treatment of Non-Stockpile Chemical Materiel. Washington, D.C.: National Academy Press.

NRC. 2005. Impact of Revised Airborne Exposure Limits on Non-Stockpile Chemical Materiel Program Activities. Washington, D.C.: The National Academies Press.

U.S. Army. 2001. Memorandum for Record: Initial Assessment of the Donovan Controlled Chamber (CDC) Used in Belgium from 14 May through 22 June, June 28. Aberdeen Proving Ground, Md.: Program Manager for Chemical Demilitarization.

DAVINCH Cold Detonation Chamber

Asahina, J. 2004. Kanda Project, Its Outline and Public Acceptance. Available online at <http://www.dstl.gov.uk/news_events/conferences/cwd/2004/proceedings36.pdf>. Last accessed March 1, 2006.

Asahina, J. 2005. Destruction of OCW at Kanda Project. Available online at <http://www.dstl.gov.uk/news_events/conferences/cwd/2005/proceedings28.pdf>. Last accessed March 1, 2006.

Asahina, J., K. Koide, and K. Kurose. 2005. "DAVINCH" Controlled Detonation Process Applied to Destroy 50 kg Yellow Bombs and 15 kg Red bombs at Kanda. Available online at <http://www.dstl.gov.uk/news_events/conferences/cwd/2005/proceedings47.pdf>. Last accessed March 1, 2006.

Lefebvre, M.H., S. Fujiwara, and J. Asahina. 2005a. Disposal of Old Chemical Weapons by Controlled Detonation: Performance Analysis of the Kanda Port Campaign. Available online at <http://www.dstl.gov.uk/news_events/conferences/cwd/2005/proceedings15.pdf>. Last accessed March 1, 2006.

Lefebvre, M., S. Fujiwara, and J. Asahina. 2005b. "Disposal of non-stockpile chemical weapons by controlled detonation." Theory and Practice of Energetic Materials, Vol. 6, Proceedings of the 2005 International Autumn Seminar on Propellants, Explosives and Pyrotechnics. W. Yajun, H. Ping, and L. Shengcai, eds. Beijing, China: State Key Laboratory of Explosion Science and Technology.

Dynasafe Static Detonation Chamber

Dynasafe. 2006. Mobile Demilitarization System for Munitions: Static Kiln SK1200CM and Off-Gas Cleaning, January. Karlskoga, Sweden: Dynasafe AB.

Ohlson, J., H. Weigel, T. Stock, H. Tsuboi, and K. Yokoyama. 2004. Destruction of CW Type Ammunition Shells Filled with Surrogate Agents in a DYNASAFE Static Kiln SK2000. Available online at <http://www.dstl.gov.uk/news_events/conferences/cwd/2004/proceedings10.pdf>. Last accessed March 2, 2006.

Weigel, H., J. Ohlson, and T. Stock. 2004. The DYNASAFE Static Kiln SK2000: Its Application for Old Chemical Munitions Destruction at Munster. Available online at <http://www.dstl.gov.uk/news_events/conferences/cwd/2004/proceedings08.pdf>. Last accessed March 2, 2006.

Assessment of Explosive Destruction Technologies for Specific Munitions at the Blue Grass and Pueblo Chemical Agent Destruction Pilot Plants
http://www.nap.edu/catalog/12482.html

Appendix B

Committee Meetings and Site Visits

FIRST COMMITTEE MEETING, MAY 7-8, 2008
WASHINGTON, D.C.

Objectives: National Research Council introduction (administrative actions, including committee introductions and composition/balance/bias discussions for committee members), committee statement of task and background review with sponsor, receive detailed process and equipment briefings, review preliminary report outline and report writing process, confirm committee writing assignments, and decide future meeting dates and next steps.

Briefings and Discussions

Consideration of Statement of Task: Richard Ayen, Committee Chair; Ray Malecki, Office of Assembled Chemical Weapons Alternatives (ACWA) Program

Dynasafe Detonation Chamber: Harley Heaton, Vice President for Research, UXB International, Inc.

Nonstockpile Experience at Pine Bluff and Schofield Barracks: Allan Caplan, Project Engineer, Non-Stockpile Program, Chemical Materials Agency

Controlled Detonation Chambers: D. Brint Bixler, Vice President, CH2M HILL

SITE VISIT, MAY 12-13, 2008
SCHOFIELD BARRACKS, HAWAII

Objective: Richard J. Ayen, committee chair, travels to Schofield Barracks to witness the final control detonation chamber (CDC) operations.

Copyright © National Academy of Sciences. All rights reserved.

TELECONFERENCE, MAY 22, 2008
COLORADO DEPARTMENT OF PUBLIC HEALTH AND ENVIRONMENT AND THE COMMITTEE

Objective: To learn about the Colorado regulator's perspective on explosive detonation technologies.

SECOND COMMITTEE MEETING, MAY 28-29, 2008
WASHINGTON, D.C.

Objectives: National Research Council composition/balance/bias discussions for committee members, receive detailed process and equipment briefings, review preliminary report draft and report writing process, confirm committee writing assignments, and decide future meeting dates and next steps.

Briefings and Discussions

Chairman's Observations on the Schofield Barracks Process: Richard Ayen, committee chair

DAVINCH: Kiyoshi J. Asahina, Chief of Technology, Chemical Weapons Demilitarization (CWD) Projects Department, Kobe Steel, Ltd.

Department of Defense Explosives Safety Board (DDESB) Permits for Detonation Technologies: Steve Hoffman, Chemical Materials Agency

Community Relations: Katherine DeWeese, Director, Communications and Congressional Affairs, Office of the ACWA Program

TELECONFERENCE, JULY 22, 2008
KENTUCKY DEPARTMENT FOR ENVIRONMENTAL PROTECTION AND THE COMMITTEE

Objective: To learn about the Kentucky regulator's perspective on explosive detonation technologies.

SITE VISITS, AUGUST 3-7, 2008
POELKAPELLE, BELGIUM, AND MÜNSTER, GERMANY

Objective: Douglas M. Medville, committee vice chair, travels to examine the DAVINCH and static detonation chamber (SDC) systems.

Copyright © National Academy of Sciences. All rights reserved.

TELECONFERENCE, AUGUST 18, 2008
U.S. ARMY CHEMICAL MATERIALS AGENCY AND THE COMMITTEE

Objectives: To discuss recent meeting with DDESB personnel, discuss the practicality of destroying overpacked munitions in the TDC and the EDS, and confirm the DDESB requirement for a particular ratio of donor explosive to propellant when destroying rockets and rocket motors.

THIRD COMMITTEE MEETING, AUGUST 25-27, 2008
J. ERIK JONSSON CENTER, WOODS HOLE, MASSACHUSETTS

Objectives: Review preliminary concurrence draft, determine what is not yet known and how to learn it, sign concurrence documents, determine path forward.

Copyright © National Academy of Sciences. All rights reserved.

Copyright © National Academy of Sciences. All rights reserved.

Assessment of Explosive Destruction Technologies for Specific Munitions at the Blue Grass and Pueblo Chemical Agent Destruction Pilot Plants
http://www.nap.edu/catalog/12482.html

Appendix C

Biographical Sketches of Committee Members

Richard J. Ayen, Chair, now retired, was director of technology for Waste Management, Inc. Dr. Ayen managed all aspects of Waste Management's Clemson Technical Center, including treatability studies and technology demonstrations for the treatment of hazardous and radioactive waste. His experience includes 20 years at Stauffer Chemical Company, where he was manager of the Process Development Department at Stauffer's Eastern Research Center. He received his Ph.D. in chemical engineering from the University of Illinois. Dr. Ayen has published extensively in his fields of interest. He has extensive experience in the evaluation and development of new technologies for the treatment of hazardous, radioactive, industrial, and municipal waste. Dr. Ayen was a member of the NRC Committees on Review and Evaluation of Alternative Technologies for Demilitarization of Assembled Chemical Weapons (I and II) and several NRC committees dedicated to the U.S. Army's non-stockpile disposal program initiatives.

Douglas M. Medville, Vice Chair, retired from MITRE as program leader for chemical materiel disposal and remediation. He has led many analyses of risk, process engineering, transportation, and alternative disposal technologies and has briefed the public and senior military officials on the results. Mr. Medville was responsible for evaluating the reliability and performance of the demilitarization machines used by the Army to disassemble stockpile chemical munitions and wrote several test plans and protocols for alternative chemical munition disposal technologies. He also led the evaluation of the operational performance of the Army's chemical weapon disposal facility on Johnson Atoll and directed an assessment of the risks, public perceptions, environmental aspects, and logistics of transporting recovered non-stockpile chemical warfare materiel to candidate storage and disposal destinations. Before that, he worked at Franklin Institute Research Laboratories and General Electric. In recent years, he participated as a committee member in several NRC studies of the Army's non-stockpile disposal program. Mr. Medville earned a B.S. in industrial engineering and an M.S. in operations research, both from New York University.

Robin L. Autenrieth, the A.P. & Florence Wiley Professor III in the Department of Civil Engineering at Texas A&M University, received a B.S. degree in biological sciences

Copyright © National Academy of Sciences. All rights reserved.

from the University of Maryland, an M.S. degree in civil and environmental engineering from Clarkson College of Technology, and a Ph.D. in civil and environmental engineering from Clarkson University. Dr. Autenrieth conducts research that connects engineering principles to the biological responses of environments exposed to damaging chemicals. Her research on biodegradation kinetics of nerve and blister agents, as well as explosives and petroleum products, is being used to develop models to predict risks associated with exposure. She links environmental contamination to impacts on exposed populations through human health risk assessment methods to estimate the potential for an adverse health effect. Dr. Autenrieth has also served on several previous NRC committees examining aspects of the U.S. Army's chemical demilitarization activities. She is the current head of the Environmental and Water Resources Division and holds a joint appointment in the School of Rural Public Health.

Adrienne T. Cooper is an assistant professor in the Department of Civil and Environmental Engineering at Temple University. She has 20 years of experience in chemical and environmental engineering, including process engineering, process and waste treatment development, and environmental regulation. Dr. Cooper conducts research in catalytic processes for environmental treatment and remediation and pollution prevention. She is a recipient of the National Science Foundation's Early Career Award for her research on the development of photochemical reactors for water treatment and remediation. She has authored numerous publications and made presentations in her field. Dr. Cooper has served as a member of several nonstockpile technology evaluation panels since 1999. She holds a Ph.D. in environmental engineering from the University of Florida and a B.S. in chemical engineering from the University of Tennessee.

Martin Gollin is an independent process design and process safety consultant engineer with an ongoing relationship with Carmagen Engineering, Inc., and was previously with ARCO Chemical Co. He has over 20 years of experience in process engineering and the management of capital projects, risk assessment, process safety, loss prevention, and product development. From 1988 to 1999 he served as process design manager and principal engineer at ARCO Chemical Co., where he developed numerous processes and improvements. He was the EH&S manager for a $1 billion grassroots project in the Netherlands and was a member of the panel that wrote the CCPS book *LOPA–Layer of Protection Analysis*. He has been a member of several National Academy of Sciences committees reviewing various aspects of the programs to destroy chemical munitions and materiel. He earned B.S. and M.S. degrees in chemical engineering from Loughborough University of Technology in England.

David A. Hoecke is currently president and CEO of Enercon Systems, Inc. He graduated from the Cooper Union with a B.S.M.E. His expertise is in the fields of waste combustion, pyrolysis, heat transfer, and gas cleaning. In 1960 he began working for Midland-Ross Corporation as a project engineer, rising to be its chief engineer for incineration by 1972. At that time he founded his own company, and he has since been

Copyright © National Academy of Sciences. All rights reserved.

responsible for the design and construction of numerous combustion systems, including solid waste incinerators, thermal oxidizers, heat recovery systems, and gas-to-air heat exchangers. Mr. Hoecke has considerable expertise in incineration technologies employed by the Army in its demilitarization of chemical weapons, most recently serving on the NRC's Committee to Review the Design and Modeling of the Metals Parts Treater for the Blue Grass Chemical Agent Destruction Pilot Plant (BGCAPP).

Paul F. Kavanaugh, U.S. Army retired, is an engineering management consultant with expertise in military and civil works design and construction. He is a registered professional engineer. Previously, he was the director of government programs for Rust International, Inc., and director of strategic planning for Waste Management Environmental Services. A retired Army brigadier general, he served with the Army Corps of Engineers, the Department of Energy, and the Defense Nuclear Agency. He also managed projects for the U.S. Army Chemical Demilitarization Program at Johnston Atoll. He earned a B.S. in civil engineering from Norwich University and an M.S. in civil engineering from Oklahoma State University.

Todd A. Kimmell is principal investigator with the Environmental Sciences Division at the U.S. Department of Energy's Argonne National Laboratory. He is an environmental scientist and policy analyst with more than 30 years' experience in solid and hazardous waste management, permitting and regulatory compliance, cleanup programs, environmental programs' policy development, emergency management, and homeland security. He has supported the Army's chemical and conventional munitions management programs and has contributed to the Army's ACWA program and the Chemical Stockpile Emergency Preparedness Program. Mr. Kimmell also has a strong technical background in analytical and physical/chemical test method development and analytical quality assurance and control. He has served the U.S. Environmental Protection Agency's National Homeland Security Research Center on environmental test methods for chemical, biological, and radiological assessment for emergency response. Mr. Kimmell has also supported a number of environmental permitting programs at Army chemical weapons storage sites and at open burning/open detonation sites. He graduated from George Washington University with an M.S. in environmental science.

George W. Parshall (NAS) was a consultant for E.I. DuPont de Nemours & Company, having retired from there in 1992 after a career at the company spanning nearly 40 years. After 1979, he served as director of chemical science in duPont's Central Research and Development. Dr. Parshall is a past member of the NRC Board on Chemical Science and Technology and took part in earlier NRC studies on the chemical demilitarization activities of the U.S. Army. He is also familiar with the status of chemical demilitarization activities and technologies in other countries. He continues to play an active role in NRC activities. He graduated from the University of Illinois with a Ph.D. in organic chemistry.

Copyright © National Academy of Sciences. All rights reserved.

James P. Pastorick is president of UXO Pro, Inc., an unexploded ordnance (UXO) consulting firm based in Alexandria, Virginia, that specializes in UXO planning and management consulting to state regulators. Since he retired from the U.S. Navy as an explosives ordnance disposal officer and diver in 1989, he has been working on civilian UXO clearance projects. Prior to starting his present company, he was the senior project manager for UXO projects at UXB International, Inc., and the IT Group. He is a master rated unexploded ordnance technician with over 20 years of experience in explosive ordnance disposal. His expertise includes chemical materiel handling, transport, disassembly and disposal, and workforce protective ensembles. Mr. Pastorick is a member of the American Society for Quality and holds an ASQ certification as a Manager of Quality/Organizational Excellence (CMQ/OE). He has been responsible for management and supervision of numerous projects related to the investigation and remediation of sites contaminated with unexploded ordnance and chemical warfare material.

William R. Rhyne is a retired risk and safety analysis consultant to the nuclear, chemical, and transportation industries, He has over 30 years' experience associated with nuclear and chemical processing facilities and with the transportation of hazardous materials. From 1984 to 1987, he was the project manager and principal investigator for a probabilistic analysis of transporting obsolete chemical munitions. From 1997 to 2002, he was a member of the NRC Committees for the Review and Evaluation of Alternative Technologies for Demilitarization of Assembled Chemical Weapons I and II and, more recently, has served on NRC committees examining chemical stockpile secondary waste issues. Dr. Rhyne has authored or coauthored numerous publications and reports on nuclear and chemical safety and risk analysis areas and is the author of the book *Hazardous Materials Transportation Risk Analysis: Quantitative Approaches for Truck and Train.* He is a former member of the NRC Transportation Research Board's Hazardous Materials Committee, the Society for Risk Analysis, the American Nuclear Society, and the American Institute of Chemical Engineers. He received a B.S. in nuclear engineering from the University of Tennessee and M.S. and D.Sc. degrees in nuclear engineering from the University of Virginia.

Copyright © National Academy of Sciences. All rights reserved.